FIRST ANGLE PROJECTION

(ALL DIMENSIONS ARE IN mm)

DRG. NO 0-105-18-62007 SH 23 OF 23

SECTION B-B

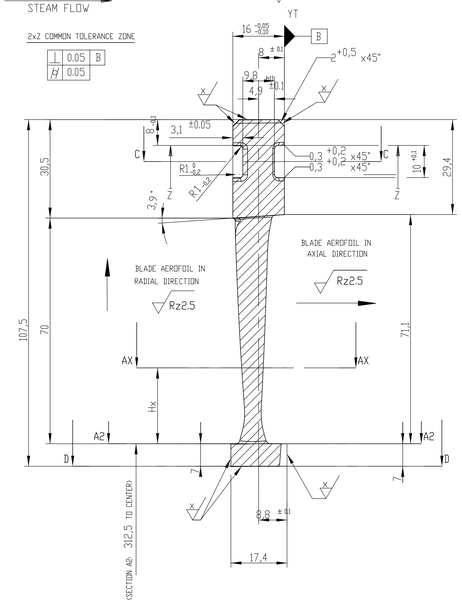

POS. NO.: 1

DESIGN "RIGHT"

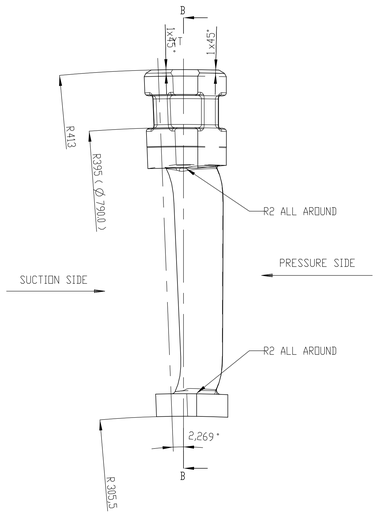

SCHEME FOR D AND S DIMENSIONS

*) REFERED TO ADJACENT BLADE

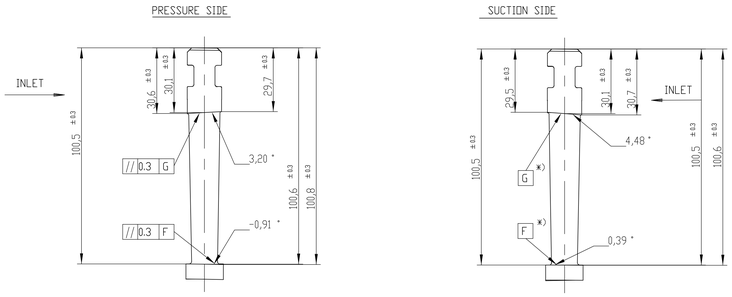

3.2 ALL OVER EXCEPT OTHERWISE STATED (x = Rz100 Rmax160 12.5 , Rz2.5 = 0.4 , Rz10 = 1.6)

DESIGN: "LEFT"

DESIGN: "RIGHT"

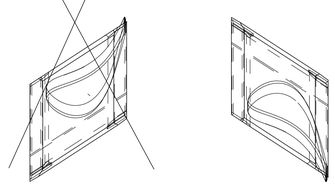

POS.NO: 01

BLADE SHOWN IN DIRECTION OF STEAM FLOW

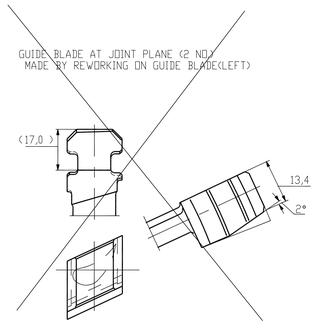

POS.NO : 02

JOINT BLADE AT PARTING PLANE (2 NO.)
MADE BY REWORKING ON GUIDE BLADE(RIGHT)

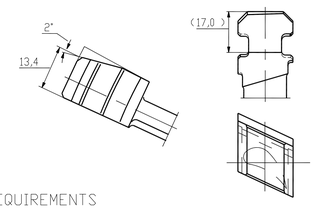

VIEW X

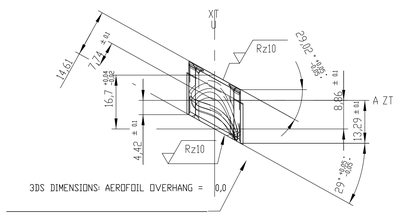

SECTION CC

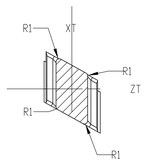

SECTION DD

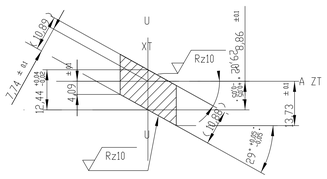

SECTION AX	Hx	Lges	AMI	UMA	RHk	BBi	D
A1 - A1	-10.0	15.05	5.74	8.27	0.08	52.64	4.85
A2 - A2	0.0	15.60	5.93	2.93	0.08	52.34	5.03
A12-A12	10.0	16.14	6.13	0.83	0.09	52.06	5.20
A38-A38	36.0	17.56	6.65	1.94	0.09	51.33	5.66
A62-A62	60.0	18.87	7.12	3.00	0.10	50.65	6.08

LOCAL SMALLEST RADIUS OF CURVATURE ON PRESSURE SIDE: 9.9 MM

TECHNICAL REQUIREMENTS

1. TOLERANCES:

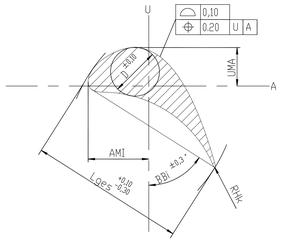

2. STRAK NUMBER: 90624
3. NUMBER OF BLADES/ROW: 156
(INCLUDING JOINT BLADES)

DESIGN: "RIGHT"

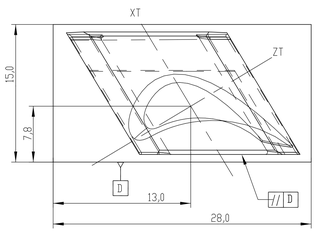

DESIGN: "LEFT"

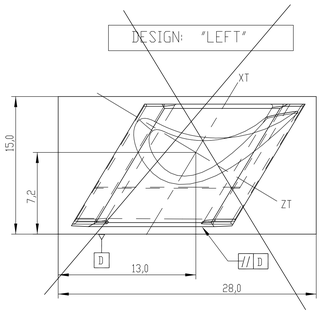

CENTRE DISTANCES IN SEMI-FINISHED CONDITION

23(RIGHT)	-23
ROW NO.	VAR

TYPE OF PRODUCT OR
NAME OF CUSTOMER/PROJECT

BHARAT HEAVY ELECTRICALS LTD.
HYDERABAD

	NAME	DATE	NO.OF VAR.
DRN.	HEMASUNDAR	18.02.2014	
CHD.	K THRIMURTHULU	18.02.2014	-NA-
APPD.	T.SPRABHAKAR	18.02.2014	

DEPT.	UNTOL. DIMS.	SCALE	WEIGHT (KG)	ITEM NO.	NO.OF ITEMS
115	GR C/M/F	NTS	0,10	-NA-	-NA-

CODE 415 — REF. TO ASSY. DRG. -NA-

TITLE GUIDE BLADE - RIGHT
S-135-S16-TR10B/071A2S

CARD CODE -

DRAWING NO. 0-105-18-62007 REV. 00
SHT. No 23 — NO. OF SHT. 23

REV.	DATE	ALTERED CHD/APPD	ZONE

THE INFORMATION ON THIS DOCUMENT IS THE PROPERTY OF BHARAT HEAVY ELECTRICALS LIMITED. IT MUST NOT BE USED DIRECTLY OR INDIRECTLY IN ANY WAY DETRIMENTAL TO THE INTEREST OF THE COMPAY

GENERAL DIMENSIONAL LIMITS,FITS & TOLERANCES AS PER HY02302261

COMPUTER FILE NAME T-8829

SIGN AND DATE — REF. DRG. NO. — INVENTORY NO

Feb Tue 18 09:03 2014

Printed by : HEMASUNDARRAO AMBALLA-FME3018 / 6146295 on 29-04-14 10:52:23

This Drawing is printed from Engineering Digital Archive System (EDAS).
Therefore signatures are not essentially required.