FIRST ANGLE PROJECTION

(ALL DIMENSIONS ARE IN mm)

DRG. NO. 0-61-020-00936

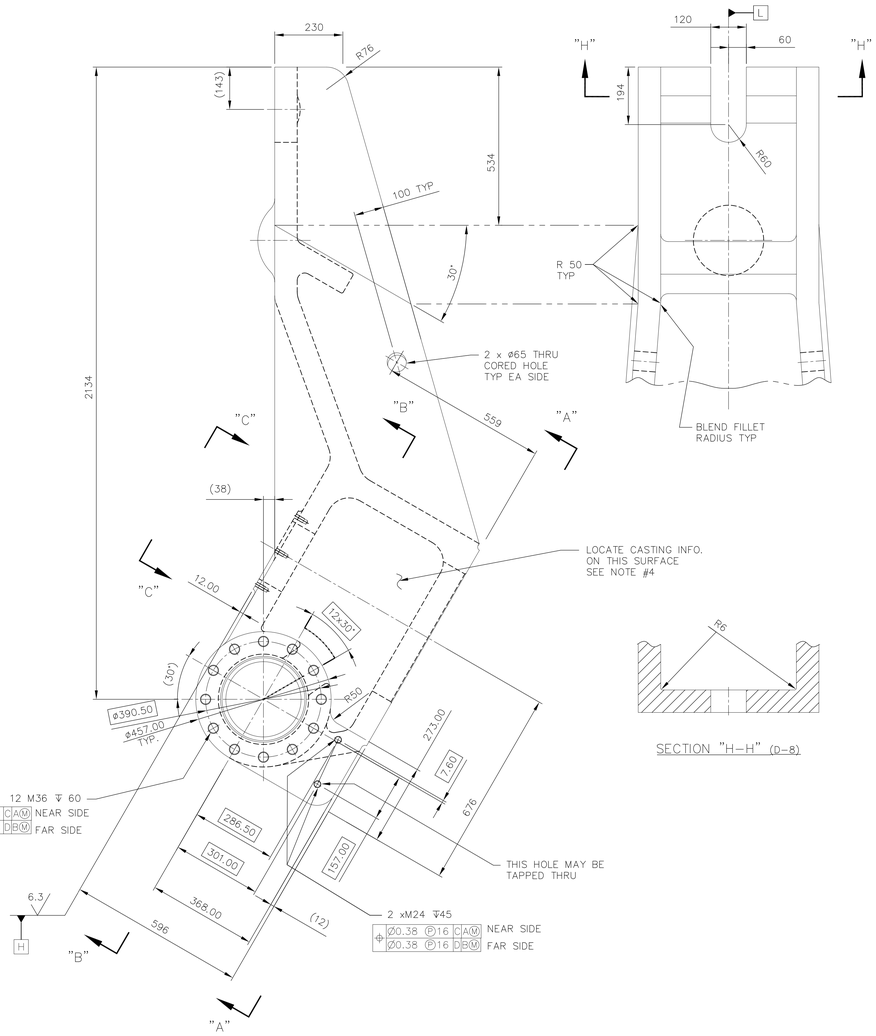

SECTION "H-H" (D-8)

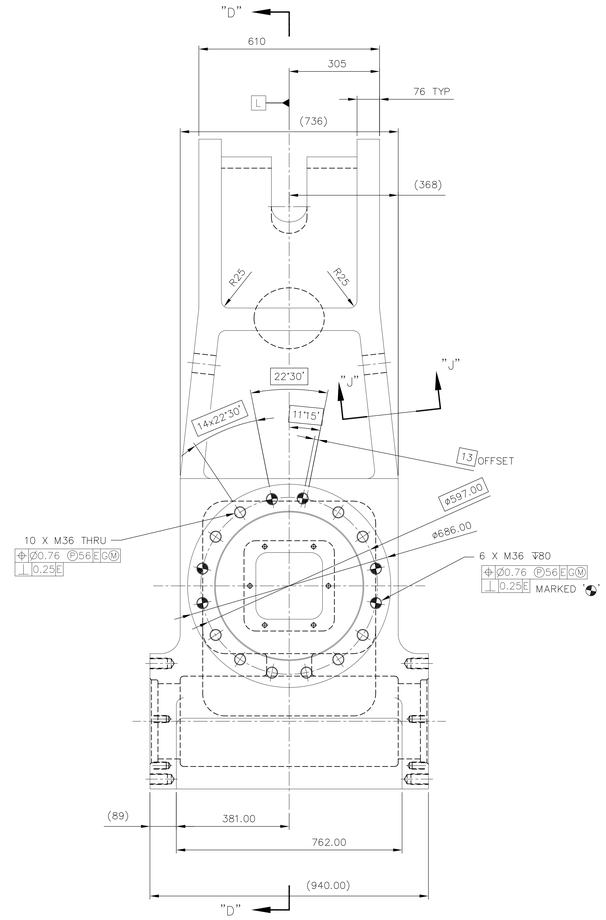

VIEW "A-A"
ROTATED 30° CCW

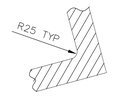

SECTION "J-J"

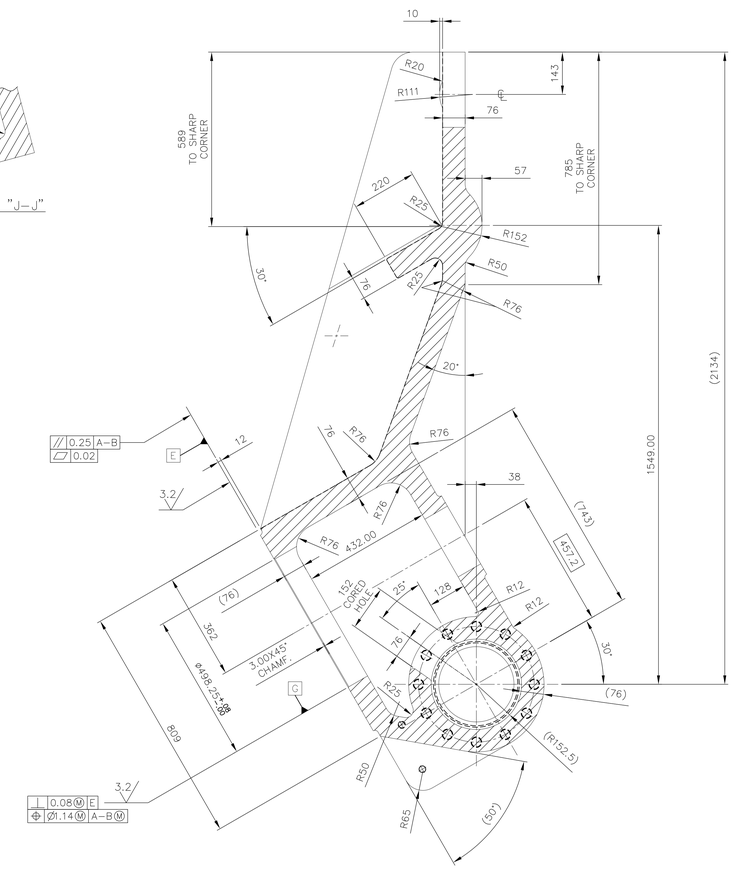

SECTION "D-D"
ROTATED 30° CCW

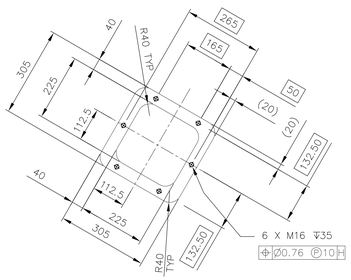

VIEW "C-C"

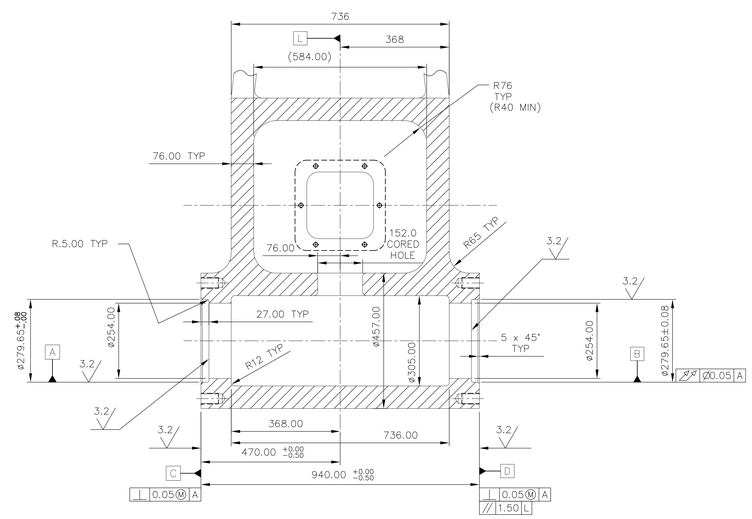

SECTION "B-B"
ROTATED 30° CCW

NOTES:

1) UNLESS OTHERWISE NOTED:
   A) CAST FILLETS 6
   B) CAST CORNERS 3
   C) CAST ANGLES ±30'
2) DRAFT ANGLES MAY BE ADDED TO CASTING DIMENSIONS WHERE REQUIRED.
3) PART TO BE SYMMETRICAL ABOUT CENTERLINE UNLESS OTHERWISE NOTED.
4) FOLLOWING INFORMATION TO BE CAST USING 6 – 10 MIN
   CHARACTER HEIGHT:
   BHEL.
   P/N 0-61-020-00936
5) THIS IS A FINISH MACHINED DRAWING.
6) AFTER FINISH MACHINING CASTING SHALL BE SUBJECTED TO COMMERCIAL BLAST TO SWEEDISH STANDARD SA 2.5 (MACHINED SURFACES SHALL BE PROTECTED) FOLLOWED BY THOROUGH CLEANING FOLLOWED BY PAINTING.
7) PAINTING SHALL BE STRICTLY AS PER CUSTOMER APPROVED PAINTING SCHEDULE.
8) ALL MACHINED SURFACE TO BE PROTECTED WITH RUST PREVENTIVE COATING SUITABLE FOR OUTDOOR STORING FOR 6 MONTHS.
9) MACHINED SURFACES SHALL BE PACKED WITH SOFT WOOD DULY FASTENED TO THE CASTING.
10) THREADED HOLES SHALL BE PACKED WITH GREASE AND FIXED WITH PLASTIC CAPS
11) SUPPLY AS PER TDC-BA75020.

THIS DWG. DOES NOT CONTAIN ALL INFORMATION NECESSARY FOR MFG. THIS PART. REFER TO RELEVANT PROCUREMENT SPECIFICATIONS & BILL OF MATERIALS FOR COMPLETE MATERIAL IDENTIFICATION & PROCESSING.

BREAK SHARP EDGES AND CORNERS UNLESS OTHERWISE NOTED.

ITEM NO.	DESCRIPTION	DRAWING NO.	VAR. NO.	RAW MATERIAL SIZE OR CASTING DRG. NO. OR FORGING DRG. NO.	MATERIAL CODE / MATERIAL SPECN.	NET WT. / QUANTITY	GROSS WT.

THIRD ANGLE PROJECTION

CAST PARTS: (AS CAST & MACHINED)
ALL DIMENSIONS ARE IN MILLIMETERS
TOLERANCES UNLESS OTHERWISE NOTED
X.XX ±0.40
X. & X.X ±1.2 PER 305 MM
X. & X.X ±1.2 FOR DIM. 0-305 MM
X. & X.X ±2.5 FOR DIM OVER 305
X. & X.X ±3.8 FOR DIM OVER 610
ANGULAR: ±0°30'
DRILLED HOLES: ø 0-25MM +0.25/-0.00; OVER 25 MM +0.50/-0.00
SURFACE TEXTURE: ROUGHNESS AVERAGE-Ra 25 MICRO METERS
THIS DRAWING IS IN ACCORDANCE WITH ISO 1101
UNLESS OTHERWISE SPECIFIED, THE THREAD PITCH IS STANDARD COARSE.

REV	DATE	ALTERED	CHECKED	APPROVED
01	7.3.15	AVB	AMAN	SG
		NOTES MODIFIED		

TYPE OF PRODUCT
NAME OF CUSTOMER/PROJECT: HP 1203 BOWL MILL

BHARAT HEAVY ELECTRICALS LIMITED HYDERABAD

	NAME	DATE
DRN.	KCMOHAN	23.12.13
CHD.	AMAN	23.12.13
APPD.	S.GHATAGE	23.12.13

DEPT: 4460
SECT: PULV. ENGG.
SCALE: NTS
WEIGHT (KG): 2730.0
REF. TO ASSY DRG.: –
ITEM NO.: –
NO.OF ITEMS: –
TITLE: JOURNAL HEAD FINISH MACHINED CASTING
DRAWING NO.: 0-61-020-00936
REV.: 01
SHEET NO. 01 NO OF SHEETS 01

THE INFORMATION ON THIS DOCUMENT IS THE PROPERTY OF BHARAT HEAVY ELECTRICALS LIMITED. IT MUST NOT BE USED DIRECTLY OR INDIRECTLY IN ANY WAY DETRIMENTAL TO THE INTEREST OF THE COMPANY

REF. DRG. NO. E-PLVE-1113M-01 | COMP. FILE NAME | INVENTORY NO.

Apr Fri 10 13:33 2015

This Drawing is printed from Engineering Digital Archive System (EDAS). Therefore signatures are not essentially required.