FIRST ANGLE PROJECTION

(ALL DIMENSIONS ARE IN mm)

POORNIMA CAD

DRG. NO. 0-61-300-00782

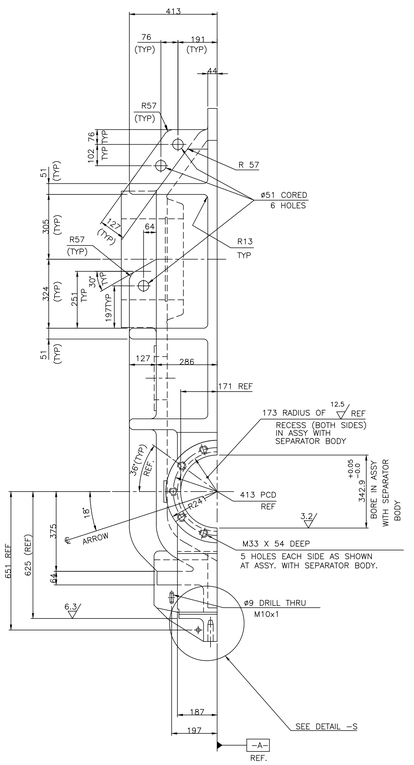

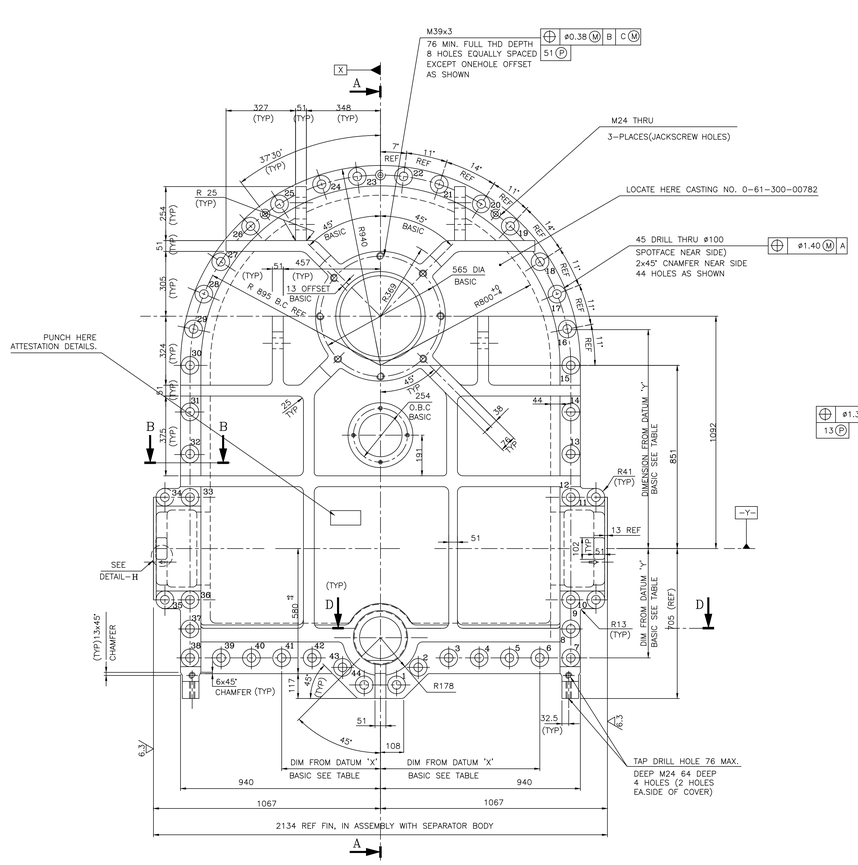

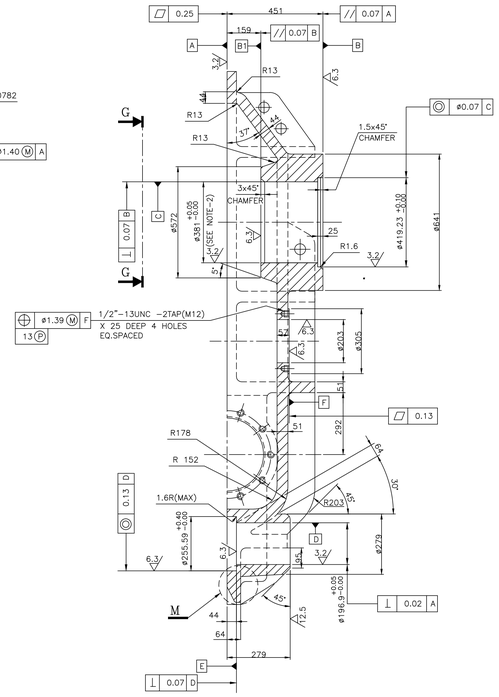

SECTION-AA

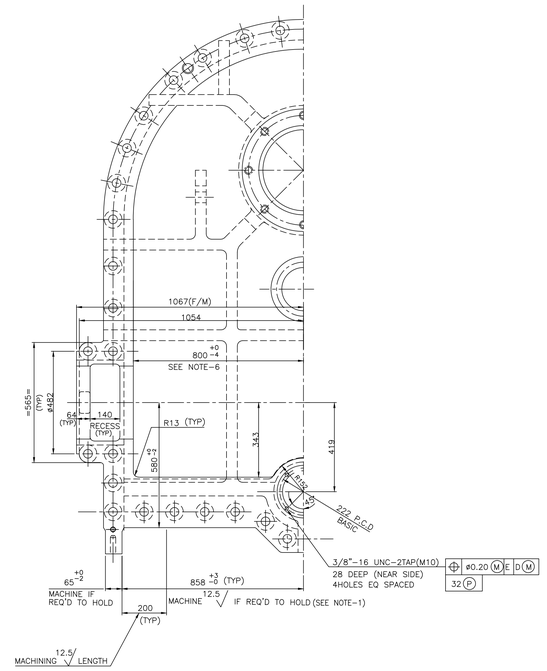

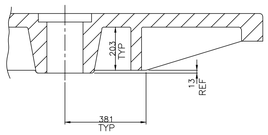

SECTION-DD

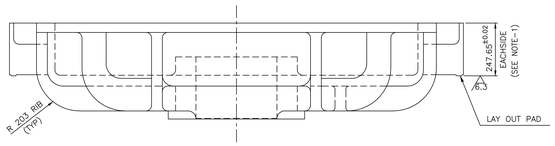

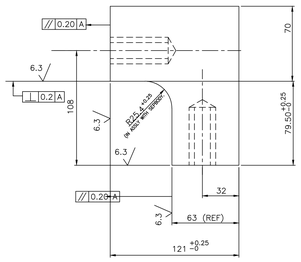

DETAIL - S

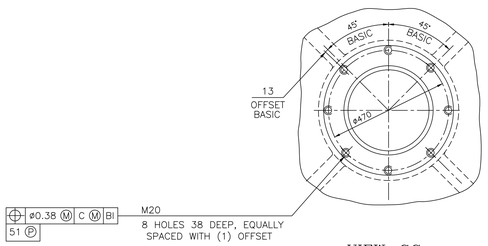

VIEW-GG

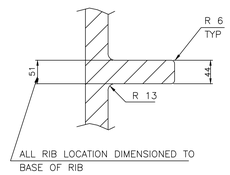

TYPICAL RIB

NOTES:-

1. THESE OPERATIONS TO BE DONE BEFORE ASSEMBLING TO SEPARATOR BODY FOR FINAL MACHINING OF TRUNNION BORES.
2. MACHINE DIA 381.0 +0.05 -0.05 TO A DEPTH OF 25MM WITH 1.6 FINISH AND REST SHOULD BE 6.3 FINISH
3. BREAK ALL SHARP CORNERS UNLESS OTHERWISE NOTED.
4. MANUFACTURING TEST CERTIFICATES TO BE FURNISHED.
5. USE DRILL JIG FOR DRILLING HOLES.
6. DP TO BE CARRIED OUT.
7. NDT TO BE CARRIED OUT AS PER AA19511 AND ACCEPTANCE SHALL BE LEVEL-III.
8. UT TO BE CARRIED OUT ON MACHINED SURFACES AS PER AA0850104 & ACCEPTANCE SHALL BE LEVEL-III.
9. LPI TO BE CARRIED OUT ON MACHINED SURFACES AS PER AA0850131 AND ACCEPTANCE SHALL BE LEVEL-III AS PER AA0850132.
10. DIMENSIONAL INSPECTION TO BE CARRIED OUT & LOG SHEET TO BE FURNISHED.
11. ALL MACHINED SURFACES TO BE PROTECTED BY APPLYING TEMPORARY RUST PREVENTIVE.
12. THREADED HOLES SHALL BE PACKED WITH GREASE AND FIXED WITH PLASTIC CAPS.
13. AXIS "Y" FOR R/M TRUNNION BORES SHALL BE ⊥ 5 X(M) A(M) IN CASTING AND BORES SHALL HAVE 5 TO 6mm ALLOWANCE ON TOOL POINT FOR FINAL MACHINING.
14. CUSTOMER'S APPROVED QUALITY PLAN SHALL BE FOLLOWED.

ITEM NO OF HOLE	DIMENSION FROM DATUM 'X'	DIMENSION FROM DATUM 'Y'
1 & 44	76	641
2 & 43	178	559
3 & 42	321	514
4 & 41	464	514
5 & 40	606.5	514
6 & 39	749	514
7 & 38	895	514
8 & 37	895	378
9 & 36	895	241
10 & 35	1013	241
11 & 34	1013	241
12 & 33	895	241
13 & 32	895	445.50
14 & 31	895	648
15 & 30	895	851
16 & 29	879	1021.50
17 & 28	830	1186
18 & 27	751	1338
19 & 26	610	1506
20 & 25	475	1610.50
21 & 24	276	1703
22 & 23	109	1740

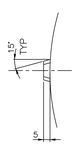

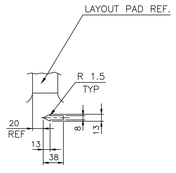

DETAIL-H
(TYP-2 PLACES)

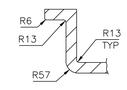

SECTION-BB

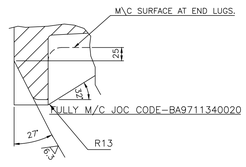

DETAIL-M

THE INFORMATION ON THIS DOCUMENT IS THE PROPERTY OF BHARAT HEAVY ELECTRICALS LIMITED. IT MUST NOT BE USED DIRECTLY OR INDIRECTLY IN ANY WAY DETRIMENTAL TO THE INTEREST OF THE COMPANY

COMP. FILE NAME | REF. DRG. NO. | INVENTORY NO

ITEM NO.	DESCRIPTION	DRAWING NO.	VAR. NO.	RAW MATERIAL SIZE OR CASTING DRG. NO. OR FORGING DRG. NO.	MATERIAL CODE	NET WT.	GROSS WT.
	CASTING				AA 19511		2922
					MATERIAL SPECN.	QUANTITY	1

THE FOLLOWING CONDITIONS APPLY EXCEPT OTHERWISE STATED.

1. REF. TO HY0230261 FOR UNSPECIFIED TOLERANCES.
2. CHAMFER M/CD. SHARP EDGES 1.2 TO 1.0 AT 45°.
3. INTERNAL M/CD. CORNER RADII 1 TO 0.7
4. THE SURFACE ROUGHNESS WHERE-EVER NOT SHOWN SHALL BE TAKEN FROM THE SURFACE ROUGHNESS SHOWN OUT SIDE THE BACK SLASH GIVEN OR THE TOP MOST RIGHT CORNER OF THE DRG.

REV.	DATE	ALTERED	CHECKED	APPROVED
ZONE				

TYPE OF PRODUCT
NAME OF CUSTOMER/PROJECT: 1003 XRP BOWL MILL

BHARAT HEAVY ELECTRICALS LIMITED HYDERABAD

	NAME	SIGN.	DATE	NO.OF VAR.
DRN.	E.M.ASHOK	E M A	4.2.09	
CHD.	AMAN		4.2.09	-NA-
APPD.	S GHATGE		4.2.09	

DEPT.	SCALE	WEIGHT (KG)	REF. TO ASSY DRG.	ITEM NO.	NO.OF ITEMS
4460	1:10	2922.00	06130000176	-NA-	-NA-
CODE PULV. ENGG.					

TITLE: JOURNAL OPENING COVER (MACHINING)

DRAWING NO. 0-61-300-00782 REV. 00

SHEET NO. 01 NO OF SHEETS 01