FIRST ANGLE PROJECTION (ALL DIMENSION ARE IN M. M.)

DRG. No. RW 37309

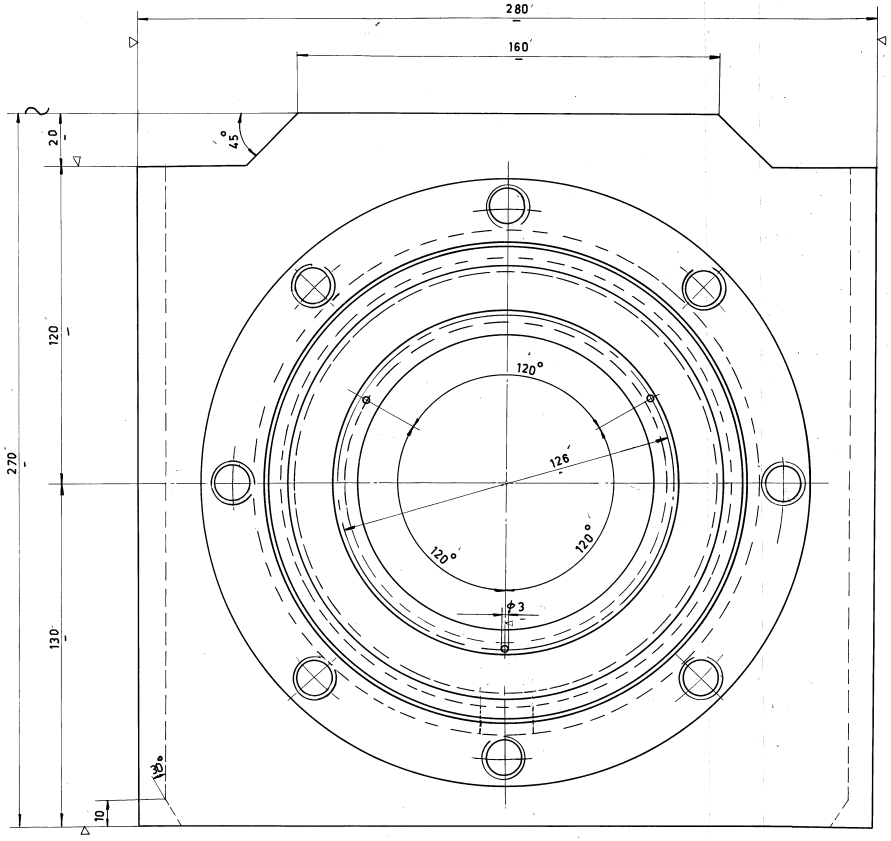

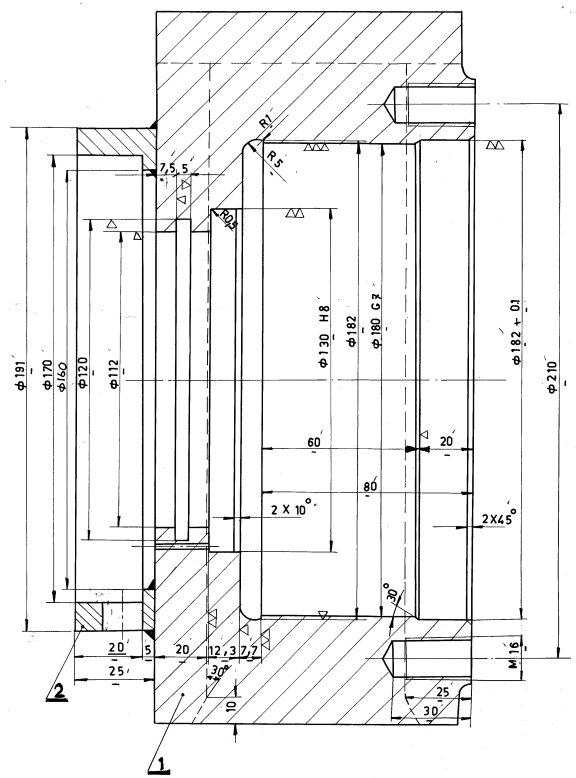

φ130	H8	+0,063 / 0,0
φ180	G7	+0,054 / +0,014

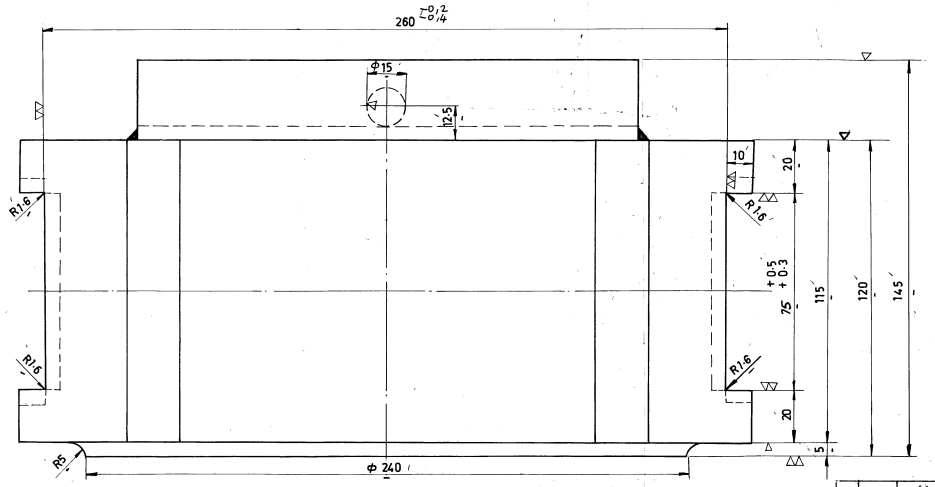

DESCRIPTION	ITEM No.	STD	DRAWING No.	ITEM No. / VARIANT	MATERIAL CODE / MATERIAL SPECN	A / C	GROUP / GROUP	UNIT Wt. (Kg) / QTY.	BMI/GRSP	ID	ZONE
PL. φ191 × 25	2							1			
BLOCK 285x275x125	1							1			

CARD TYPE 2

EQPT: TRANSPORT FACILITIES INFRONT OF SHEAR

REV.	DATE	ALTERED / CHECKED	REV.	DATE	ALTERED / CHECKED

BHARAT HEAVY ELECTRICALS LTD.,
SEAMLESS STEEL TUBE PLANT - TIRUCHIRAPALLI - 600 014

DEPT	CODE	SCALE	WEIGHT (Kg)	REF. TO ASSY DRG./OLD DRG.	ITEM
		1:1	50	1-7-1001-80-01440/RW37309	4

TITLE: **BEARING HOUSING** (BLOOM SKID ROLLER ASSY.)

	NAME	SIGN	DATE
DRAWN	EC DOY		
CHECKED	S. Mahendra		30/6/85
APPROVED			

DIMENSIONS TO BE CONTROLLED WITHIN LIMITS AS SHOWN
MACHINING TOLERANCE ± 0.25 M. M. UNLESS OTHERWISE SHOWN
NON-MACHINING TOLERANCE ± .....

CARD CODE

DRAWING No. 1-7-1001-80-00463

SHEET No. ____ No. OF SHEETS ____ REV. 00

CAUTION: THIS DRAWING IS OUR SOLE PROPERTY AND SHOULD NOT BE USED IN ANY FORM FOR ANY OTHER PURPOSE WITHOUT THE WRITTEN PERMISSION OF BHARAT HEAVY ELECTRICALS LTD., TIRUCHIRAPALLI-14

REF. DRG. No. | SIGN & DATE | INVENTORY No.

EC007

FIRST ANGLE PROJECTION (ALL DIMENSIONS IN MILLIMETRES)

05-228 / C

CAUTION THE INFORMATION ON THIS DOCUMENT IS THE PROPERTY OF BHARAT HEAVY ELECTRICALS LTD. IT MUST NOT BE USED DIRECTLY OR INDIRECTLY IN ANY WAY DETRIMENTAL TO THE INTEREST OF THE COMPANY.

3,2 / 0,8 , 1,6

$\phi 110^{h11}$	0 / −0,220	$\phi 85^{n6}$	+0,045 / +0,023	$\phi 60^{k6}$	+0,021 / +0,002	18^{N9}	0 / −0,043
$\phi 100^{j6}$	+0,013 / −0,009	$\phi 80^{h11}$	0 / −0,190	28^{N9}	0 / −0,052		

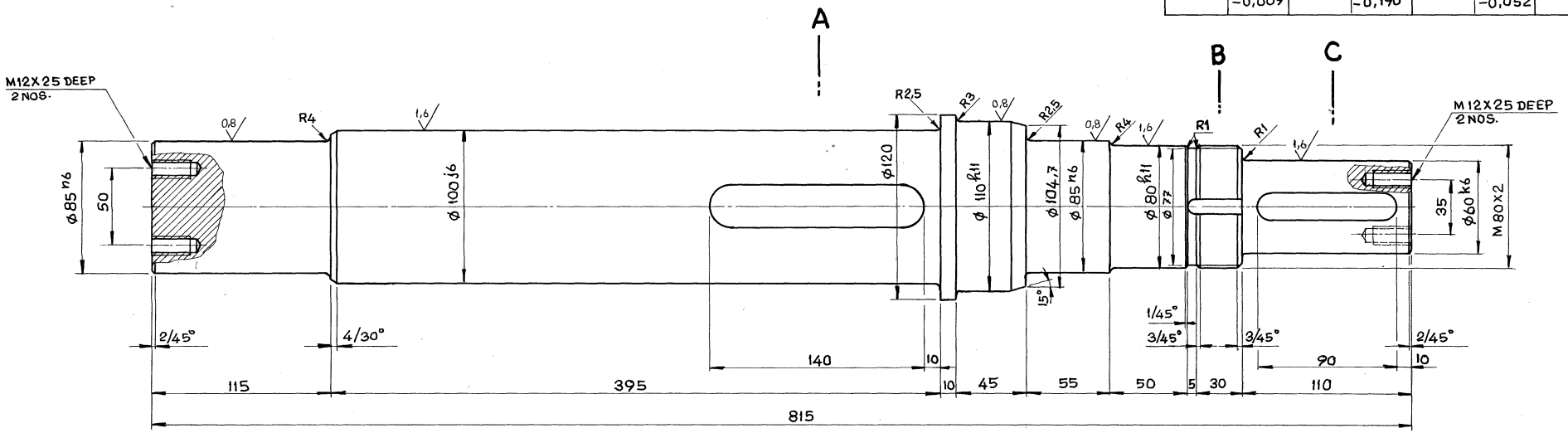

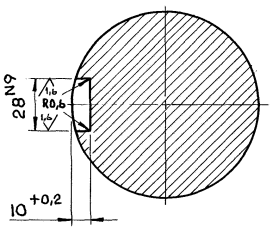

SECTION-AA

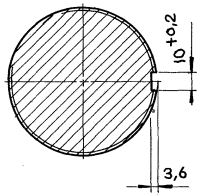

SECTION-BB

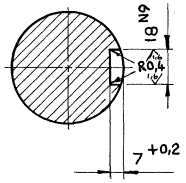

SECTION-CC

ITEM NO.	DESCRIPTION	DRAWING NO.	MATL CODE / MATL SPEC	UNIT WT / QTY
			C60 / IS:2073	

EQPT: TRANSPORT FACILITIES IN FRONT OF SHEAR

Bharat Heavy Electricals Ltd.,
SEAMLESS STEEL TUBE PLANT
TIRUCHIRAPALLI-620 014

	NAME	SIGN	DATE	NO. OF ITEMS
DRN	S. RAJENDRAKUMAR		09.04.93	
CHD			26.4.93	
APPD			26.4.93	

REV	DATE	ALTERED / CHECKED
01		

ZONE

DEPT / CODE	GRADE OF UNTOL. DIM	SCALE	WEIGHT (kg)	REF TO ASSY / OLD DRG	ITEM NO.
	C/M/F	1:2	42,0	1-7-1001-80-01440 RW 37305/2	02

TITLE: **SHAFT** (BLOOM SKID ROLLER ASSY.)

CARD CODE: U 01

DRAWING NO.: **2-7-1001-80-02191**

REV: 00

Size A2