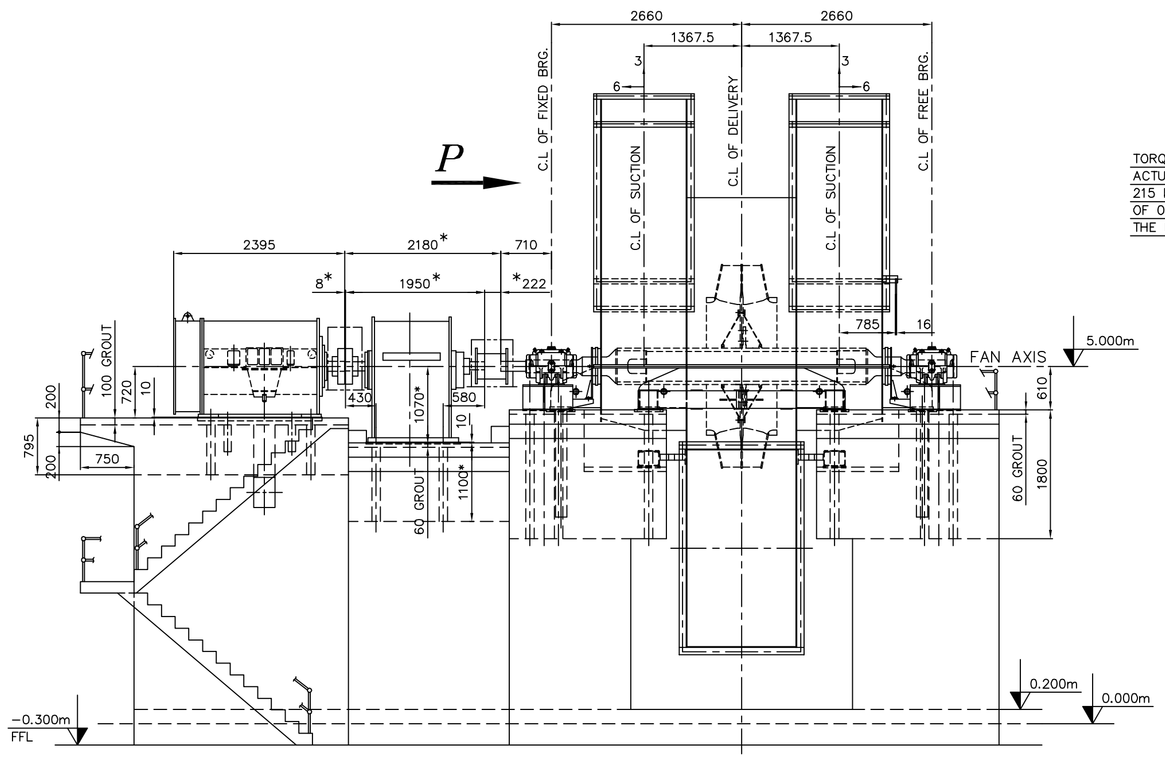

VIEW–P
(WITHOUT MOTOR & HYDRAULIC COUPLING AND THEIR FOUNDATIONS)

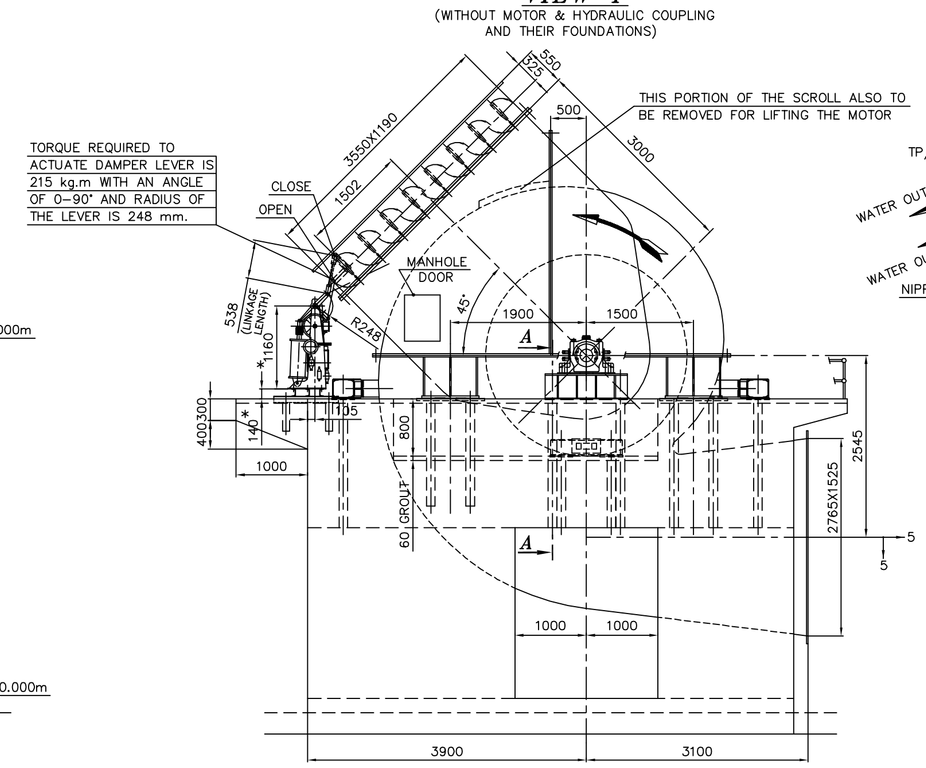

WATER CONNECTING DETAILS OF 7" XC BEARING

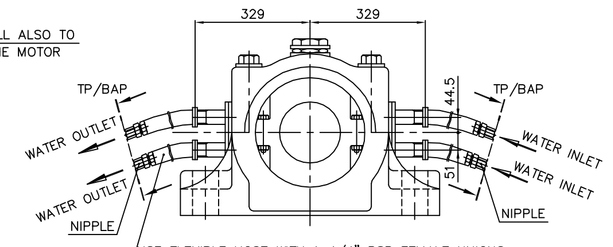

USE FLEXIBLE HOSE WITH 1–1/4" BSP FEMALE UNIONS FOR CONNECTING THE WATER LINES WITH INLET AND OUTLET OF THE BRG. (BHEL/BAP SCOPE OF SUPPLY)

COOLING WATER REQUIREMENT PER FAN : 2.3m³/hour

KEY PLAN
BHEL/TRICHY REFERENCE DRG. 0–00–515–93631 (LAYOUT OF ID SYSTEM)
(KEY PLAN SHOWN IS INFORMATIVE ONLY.
FOR EXACT LOCATION, REFER BOILER LAYOUT DRAWINGS)

NORTH

BOILER SIDE

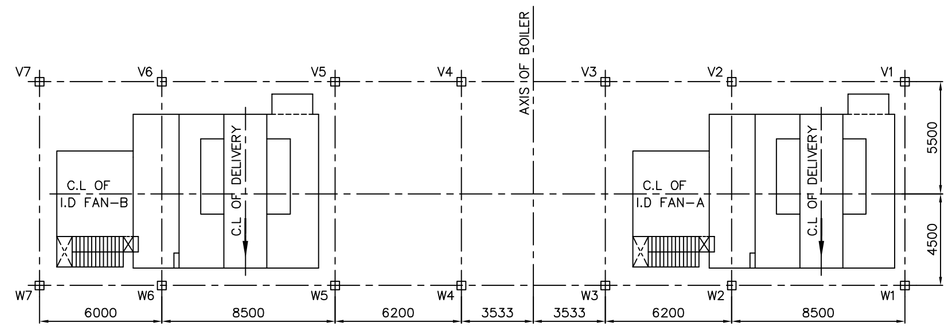

CHIMNEY SIDE

SECTION–AA

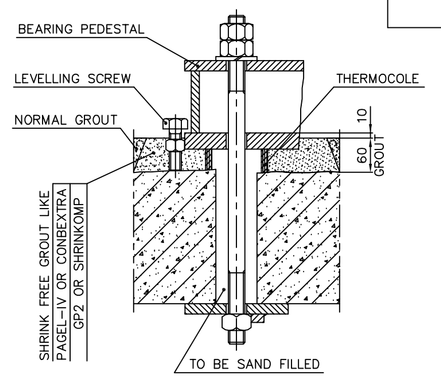

FOUNDATION PLAN

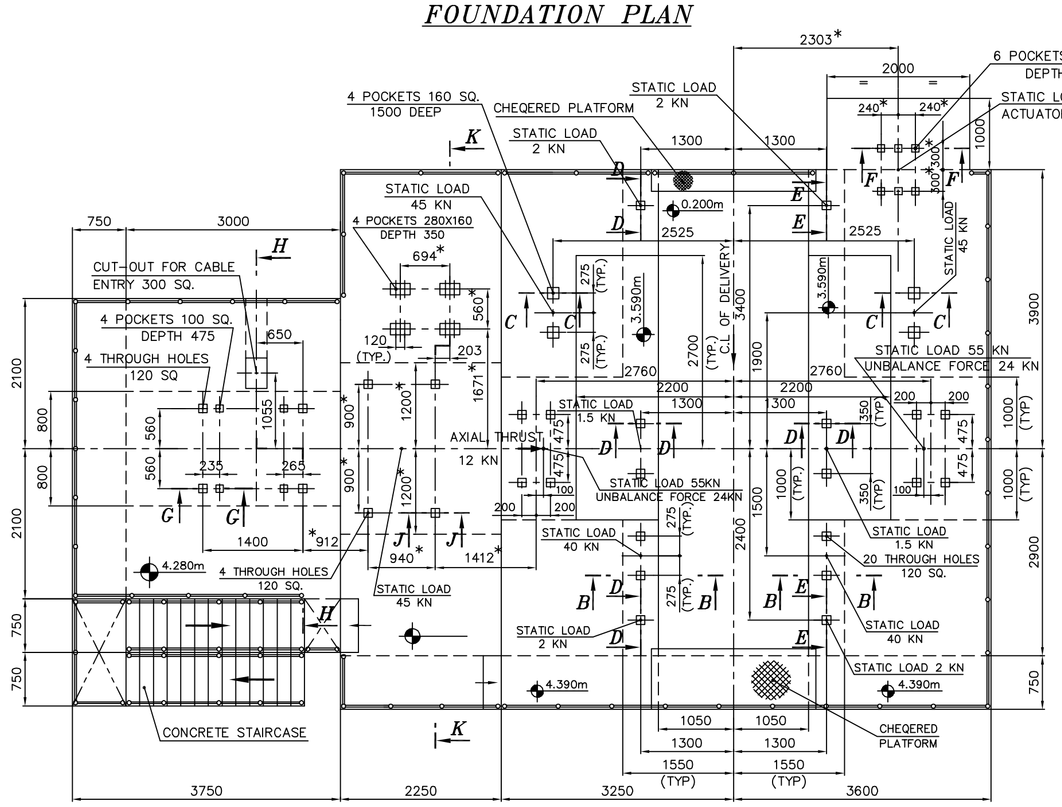

SECTION–BB
(DURING ERECTION)

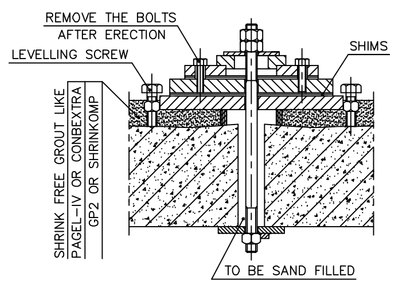

SECTION–BB
(AFTER ERECTION)

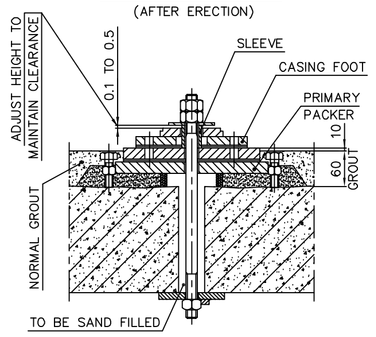

SECTION–CC
(DURING ERECTION)

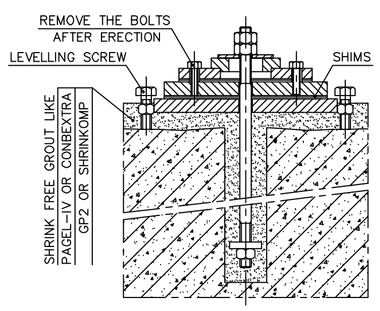

SECTION–CC
(AFTER ERECTION)

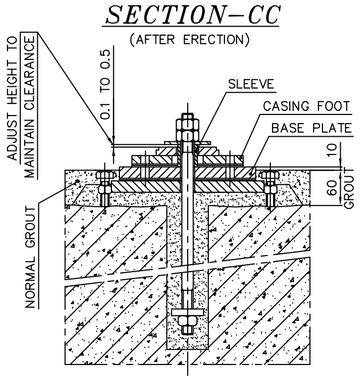

SECTION–DD

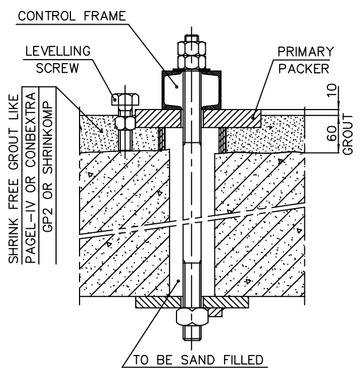

SECTION–EE

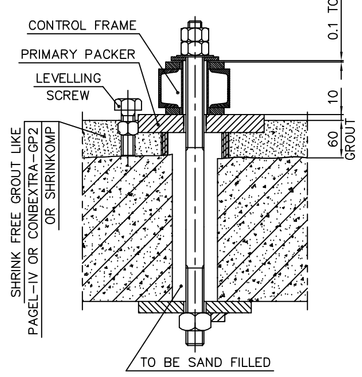

SECTION–FF

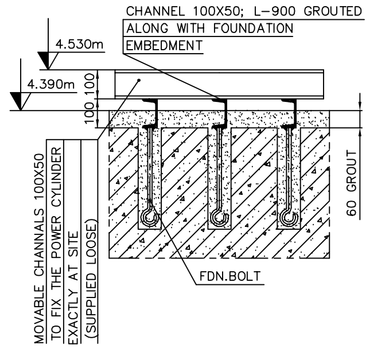

SECTION–GG

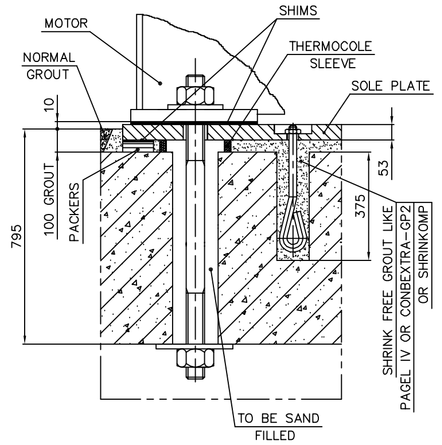

NOTES:–

01. THE LOADS INDICATED ON FOUNDATION ARE WITHOUT ALLOWANCES FOR VIBRATIONS. CIVIL DESIGNERS/ CONSULTANTS ARE RESPONSIBLE FOR PROPER DESIGN OF FOUNDATION TAKING INTO ACCOUNT OF THE ALLOWANCES FOR VIBRATION ALSO.
02. THE NATURAL FREQUENCY OF THE FOUNDATION SHOULD BE MINIMUM +20% AWAY FROM THE OPERATING FREQUENCY OF THE FAN. THE NATURAL FREQUENCY OF THE CONNECTING DUCT AND SUPPORTING STRUCTURE SHOULD BE CLEARLY AWAY FROM THE OPERATING FREQUENCY OF THE FAN.
03. ADOPT IS : 2974 / PART–IV FOR THE FOUNDATION DESIGN.
04. THE CONNECTING DUCTS AT INLET AND OUTLET OF FAN MUST BE SELF SUPPORTED AND SHOULD NOT BE WELDED WITH EXPANSION JOINTS.
05. FOUNDATION POCKETS SHOULD BE PERPENDICULAR TO THE FLAT SURFACES OF FOUNDATION.
06. ACCURATE TEMPLATES SHALL BE USED FOR LOCATING CORES FOR POCKET HOLES TO ENSURE THEIR DIMENSIONAL ACCURACY.
07. TOLERANCE BETWEEN ANY TWO POCKET CENTRES IS ±5 mm.
08. TOLERANCE ON CONCRETE LEVELS $^{+0}_{-25}$ mm.
09. IN AREAS WHERE SOLE PLATES AND ANCHOR PLATES ARE TO BE INCORPORATED IN FOUNDATION CONCRETE, THE SIZE OF THE COARSE AGGREGATE USED SHALL NOT EXCEED 20 mm AND DOWN GRADED TO FACILITATE CHIPPING AND SCRAPPING AND THEREBY ENSURING MAXIMUM CONTACT ON THE MATING AREAS.
10. NON–SHRINK GROUT IS TO BE USED. REFER GENERAL SPECIFICATIONS ISSUED BY BHEL/RANIPET FOR NON–SHRINK GROUT. THIS ALSO CONTAINS THE PREPARATIONS OF PRIMARY PACKERS & SHIMS.
11. GROUTING SHOULD BE DONE ONLY AFTER FINAL ALIGNMENT OF FAN.
12. ELEVATIONS & POCKET DEPTH SHOWN IN FOUNDATION PLAN INCLUDING GROUTING THICKNESS.
13. GROUTING IS IN THE SCOPE OF ERECTION GROUP/CONTRACTOR.
14. HANDRAILS, STEEL PLATFORMS, STAIRS, LADDERS & THEIR EMBEDMENTS ARE IN THE SCOPE OF BHEL/TRICHY.
15. FAN FOUNDATION SHOULD NOT BE USED AS SUPPORT FOR OTHER STRUCTURES OR EQUIPMENTS.
16. FOUNDATION CONFIGURATION SHOWN IN THIS DRAWING IS ONLY INFORMATIVE/TYPICAL. TYPE AND DETAILS OF FOUNDATION ARE TO BE FINALISED BY CIVIL DESIGNERS/CONSULTANTS.
17. FOR MOTOR ERECTION, REFER MOTOR SUPPLIER'S ERECTION MANUAL.
18. SOLE PLATE, FOUNDATION BOLTS & FASTENERS RELATED TO MOTORS WILL BE IN THE SCOPE OF MOTOR SUPPLIER (BHEL BHOPAL UNIT)

FAN DETAILS:–

TYPE	: NDZV 28 SIDOR
WEIGHT OF FAN WITHOUT MOTOR & COUPLING	: 28500 Kg
WEIGHT OF ROTATING PARTS OF FAN	: 8000 Kg
GD^2 OF FAN	: 20160 Kg.m²
SPEED OF FAN	: VARIABLE (300 TO 740 RPM)
NO. OF FANS PER BOILER	: TWO (BOTH IDENTICAL)
MAX. WEIGHT TO BE HANDLED FOR MAINTENANCE	: 8000 Kg (APPROX.)

MOTOR DETAILS:–

MAKE		: M/s. BHEL/BHOPAL
TYPE		: SQ. CAGE INDUCTION, 1LA7712–8, TETV, IP–55, B3
RATING		: 650 KW/741 RPM/6600 V/ 3ø/ 50 Hz
WEIGHT OF MOTOR		: 6850 Kg
WEIGHT OF ROTATING PARTS		: 1700 Kg
GD^2 OF MOTOR		: 304 Kg.m²
MOTOR DRG. NO.		: 3 402 00 46284 Sh. 01 OF 06
MAX. FOUNDATION LOADING (ALTERNATING) PER MOTOR LONGITUDINAL SIDE		: 74 kN UPWARDS 141 kN DOWNWARDS
BEARINGS	D.E N.D.E	: NU230M+6230C3 NU226M
LUBRICATION		: GREASE (SERVOGEM–3 OR EQUIVALENT)

HYDRAULIC COUPLING DETAILS:–*

TYPE	:
MAKE	:
TOTAL WEIGHT WITHOUT OIL	:
WEIGHT OF ROTATING PARTS WITH OIL	:
REQUIRED OIL VISCOSITY	:
MOMENT OF INERTIA (J) :	
PRIMARY WITH OIL	:
SECONDARY WITH OIL	:

} SHALL BE FURNISHED LATER

SECTION–HH

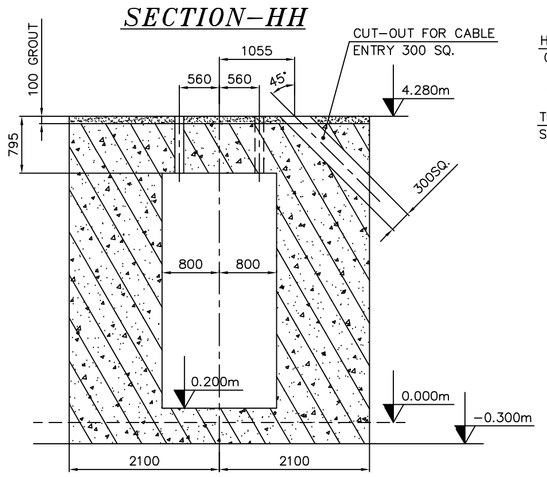

SECTION–JJ*

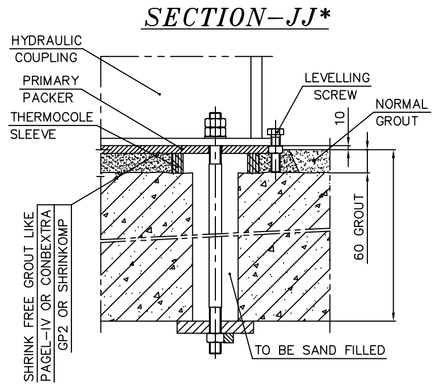

SECTION–KK*

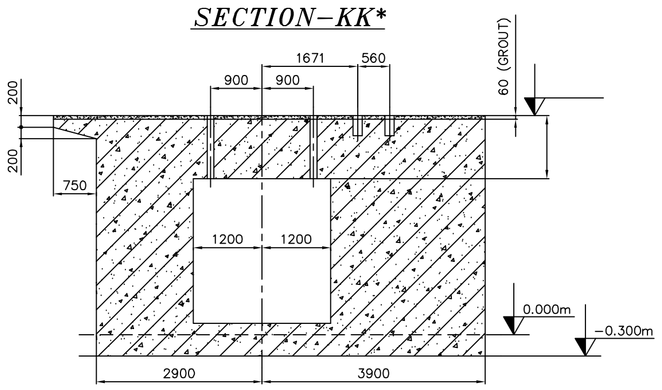

DIMENSIONS / ITEMS MARKED WITH "*" WILL BE CONFIRMED LATER.

MOTOR SHAFT END

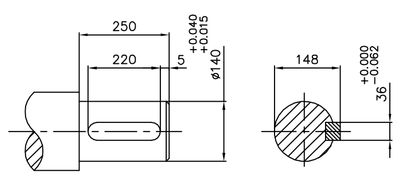

FAN SHAFT END

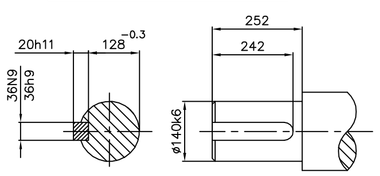

DELIVERY FLANGE

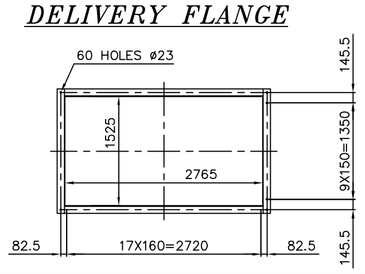

SUCTION FLANGE

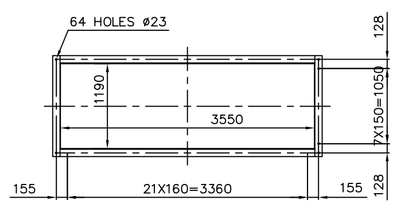

CUSTOMER NO : R132

CAUTION: THE INFORMATION IN THIS DOCUMENT IS THE PROPERTY OF BHARAT HEAVY ELECTRICALS LIMITED. IT MUST NOT BE USED DIRECTLY OR INDIRECTLY IN ANY WAY DETRIMENTAL TO THE INTEREST OF THE COMPANY.

CLIENT	COMPAGNIE D'E'LECTRICITE' DU SENEGAL SA SENEGAL
PROJECT	1x125MW THERMAL POWER PLANT, SENEGAL
EPC CONTRACTOR	promac ENGINEERING INDUSTRIES. LTD. BANGALURU
CONSULTANT	POWERTEC ENGINEERING PVT. LTD. CHENNAI.
	BHARAT HEAVY ELECTRICALS LTD. BOILER AUXILIARIES PLANT RANIPET – 632 406
DRAWN	P.S.N
CHECKED	SANDEEP
APPROVED	V.P.S
DATE	17.08.13
ALL DIMENSIONS ARE IN MILLIMETRES	
SCALE	1:60
TITLE	GENERAL ARRANGEMENT OF ID FAN NDZV 28 SIDOR
DRAWING No.	1–00–099–28868
REV.	00
EPCC DRG No:	

Size A1