FIRST ANGLE PROJECTION | (ALL DIMENSIONS ARE IN mm)

FORM: DG 45(B)

DRAWING NO. 1133546501O

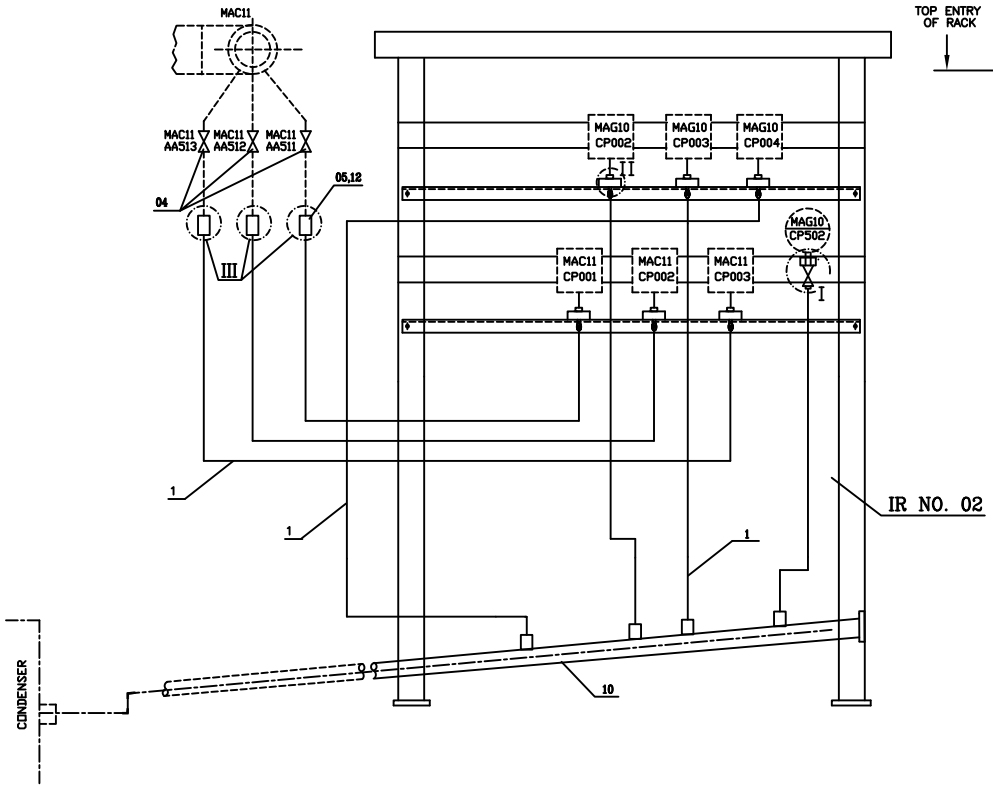

INSTRUMENT RACK NO.-02(VAR.-00)

(TYPE-A)

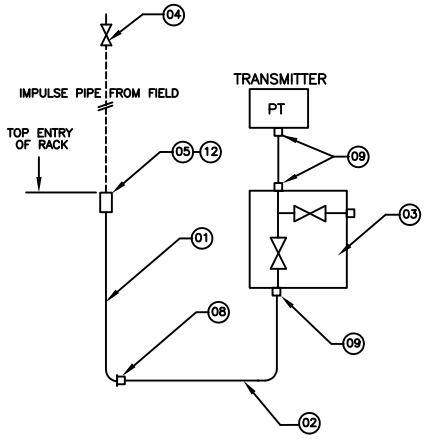

HOOK-UP-III (3-NO.)

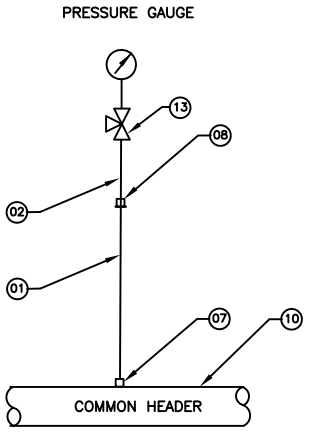

HOOK-UP-I (1-NO.)

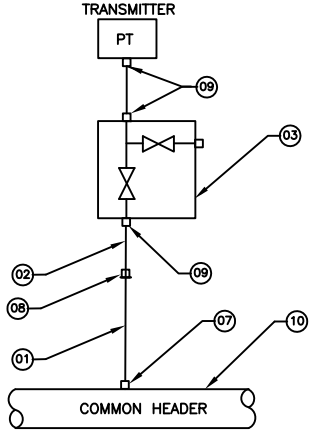

HOOK-UP-II (3-NO.)

ITEM	DESCRIPTION	QTY.	REMARKS
	PRESSURE TRANSMITTER/PRESSURE GAUGE/PRESSURE SWITCH		BHEL SCOPE
13	THREE WAY GAUGE COCK/ SS316/ SIZE 1/2" NPTFx1/2" OD SS TUBE	01	
12	CAP NUT FOR BULK HEAD ASTM A105	03	
10	COMMON HEADER/ CS ASTM A106 Gr-C / SIZE 3" NB/ SCH-80(88.9X4)	01	
09	TUBE FITTING DOUBLE FERRULE DOUBLE COMPRESSION/ MAT. SS316/ SIZE 1/2" NPTM x TO SUIT 1/2" OD SS TUBE	19	
08	TEE TUBE UNION/ SS316 / SIZE OD OF 1/2" NB SW x TO SUIT 1/2" OD SS TUBE	07	
07	HALF COUPLING/ASTM A105/SIZE 1/2" NB SW / CL 3000lbs	04	
05	BULK HEAD/ASTM A105/SIZE 1/2" NB SW / CL 3000lbs	03	
04	FORGED GLOBE VALVE/ BODY ASTM A105/STEM ASTM A182 Gr-F6A/ SIZE 1/2" NB SW/ CL 800	03	
03	TWO VALVE MANIFOLD, 1/2" NPTF/BODY/TRIM SS316/PR TESTING 3000PSI	06	
02	SEAMLESS SS TUBE, ASTM A213 TP 316H/SIZE 1/2" OD, THICK 2.1mm	A/R	
01	IMPULSE PIPE/ ASTM A106, Gr-C /SIZE 1/2" NB/SCH-80	A/R	

VAR.NO.	MATERIAL CODE
00	W90318130335

GRADE OF UNTOL. DIM.:-
M/CG- V/C/M/F AA 0230208
WELDING-A/B/C/D-AA621104
GAS CUTTING-T3'AA0621101

REV.	DATE	ALTERED / CHECKED

CBOM NO. 21335465000

AGREED REPT.	NAME	SIGN	DATE

STATUS OF DRG.

TYPE OF PRODUCT OR NAME OF CUSTOMER/ PROJECT: STEAM TURBINE

BHARAT HEAVY ELECTRICALS LTD. HARDWAR

	NAME	SIGN	DATE
DRN	SSTEBLR	SSTEBLR	27/12/2014
CHD	SSTESS1	SSTESS1	27/12/2014
APD	ASTEVK	ASTEVK	16/01/2015

NO.OF VAR. 73, 74

DEPT. STE CODE 4011 | SCALE N.T.S. | WEIGHT(Kg.) 215 | REF. TO ASSY. DRG. | ITEM NO. | NO.OF ITEMS 75, 77

TITLE: ASSY. RACK FOR CONDENSER INST.

DRAWING NO. 1133546501O

SHEET NO. 1 | NO.OF SHEETS 1

SIZE A1

REF. DRG NO. | SIGN & DATE | INVENTORY NO.

COPYRIGHT AND CONFIDENTIAL
THE INFORMATION ON THIS DOCUMENT IS THE PROPERTY OF BHARAT HEAVY ELECTRICALS LIMITED
IT MUST NOT BE USED DIRECTLY OR INDIRECTLY IN ANY WAY DETRIMENTAL TO THE INTEREST OF THE COMPANY.