FIRST ANGLE PROJECTION

(ALL DIMENSIONS ARE IN mm)

DRG. NO. 1-163-16-11461 SH OF

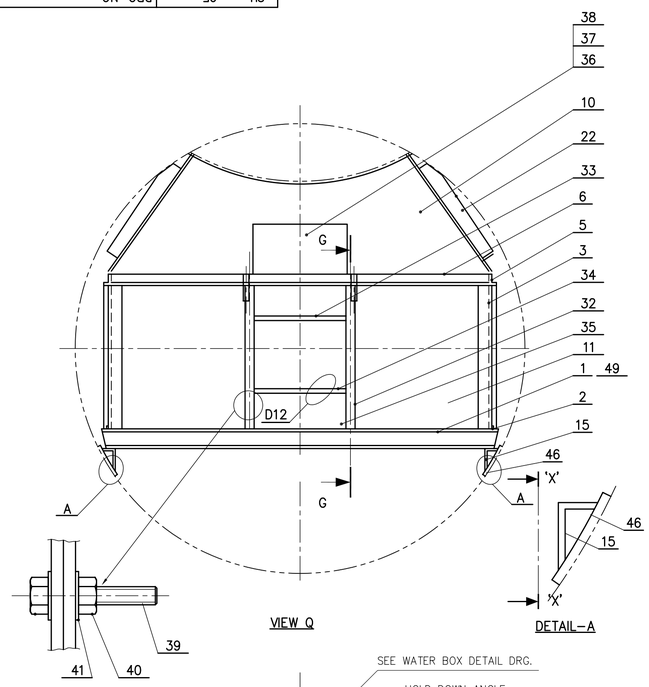

VIEW Q

DETAIL–A

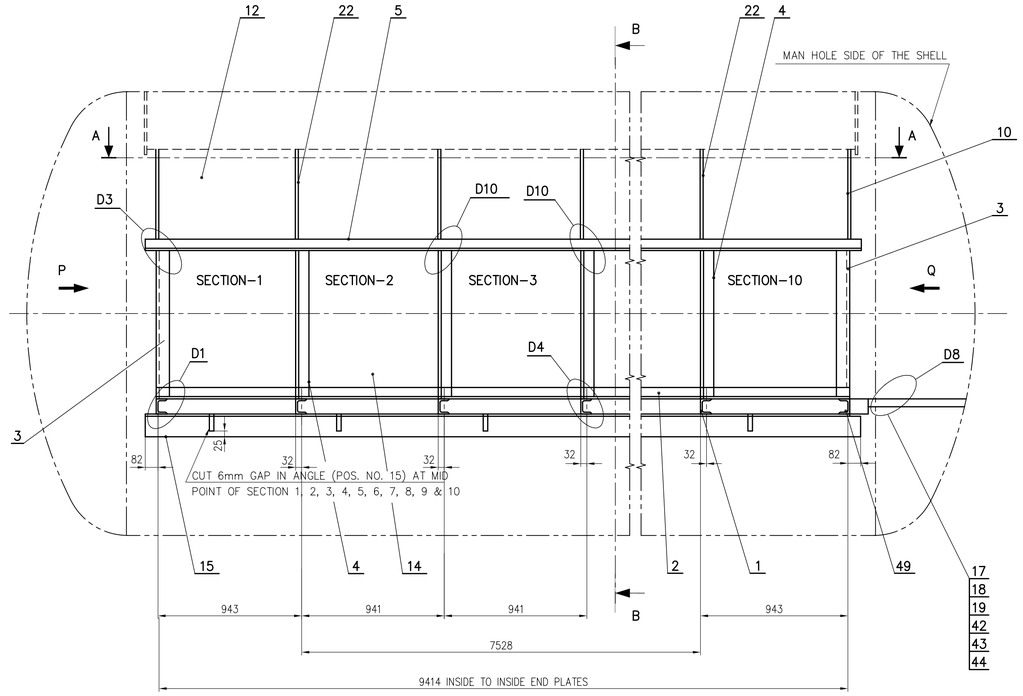

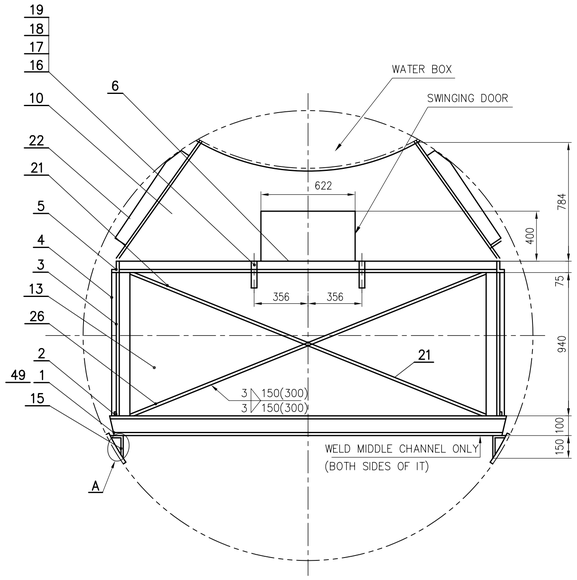

VIEW–P

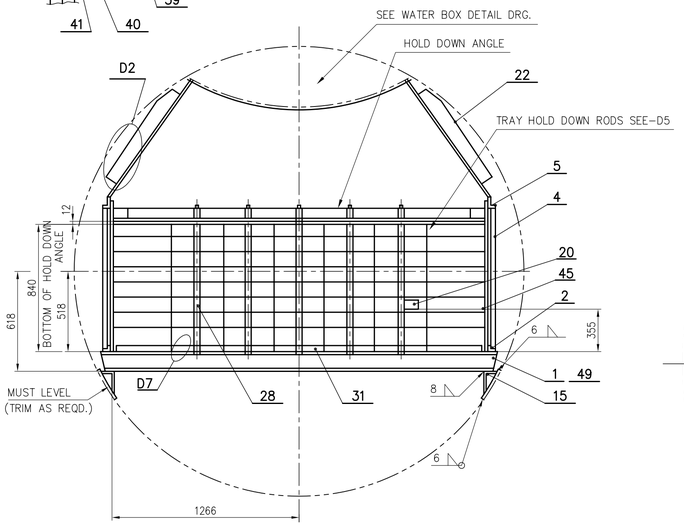

SECTION B–B

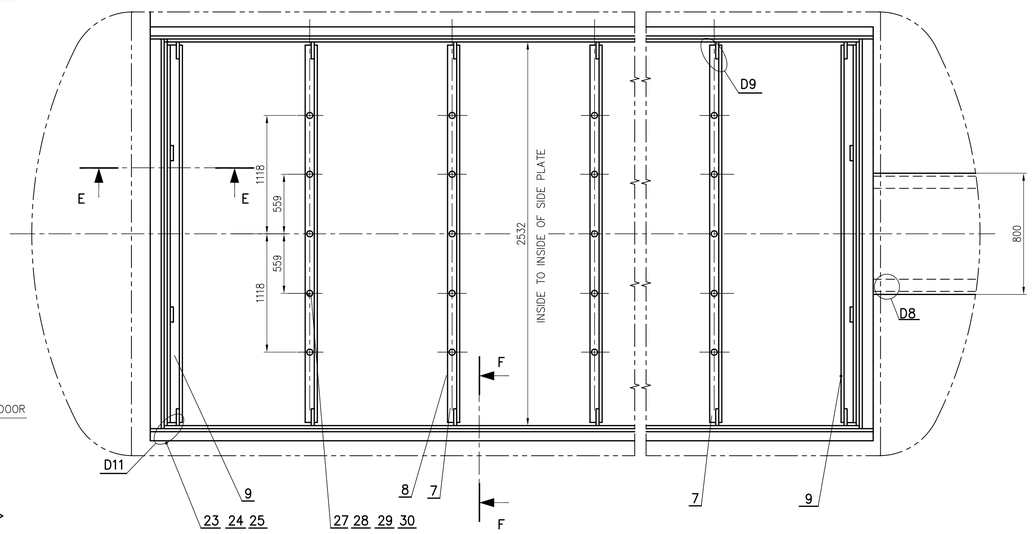

SECTION–A A

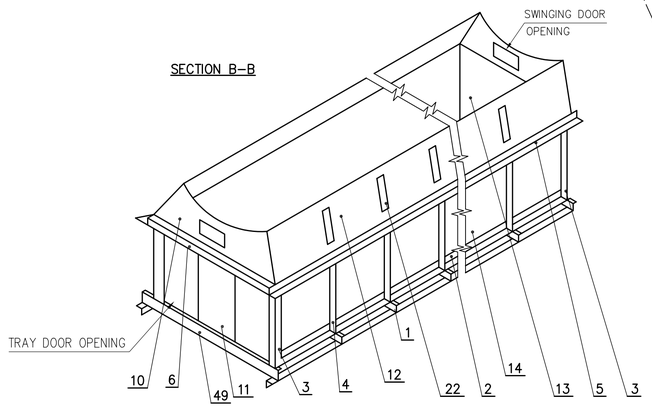

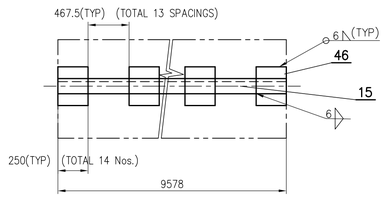

SECTION – 'X' 'X'

TRAY ASSEMBLY PROCEDURE

1. COMPLETE SHELL SEGMENT FABRICATION COVERING THE ENTIRE LENGTH
2. UN–EQUAL ANGLES (POS. NO. 15) ARE WELDED TO SHELL. CHANNELS (POS. NO. 1 & 49) IS LAID OUTSIDE THE SHELL.
4. BARGRATING (POS. NO. 31) IS PLACED ON THE CHANNELS AND FILLET WELDED
5. BOTTOM SIDE ANGLES (POS. NO. 2) ARE WELDED TO THE CHANNELS (POS. NO .1) AND WELDED TO THE SIDE POST (POS. NO. 4) AS PER DETAIL–D4
6. CORNER POSTS (POS. NO. 3) ARE WELDED TO SIDE ANGLE (POS. NO. 2) AND CHANNEL (POS. NO. 49)
7. TOP SIDE ANGLES (POS. NO. 5) ARE WELDED SIDE AND CORNER POSTS AND WELDED AS PER DETAIL D3 & D5
8. SIDE PLATE (POS. NO. 14) IS KEPT NEAR THE SIDE POST (POS. NO. 4)
9. STIFFENER (POS. NO. 22) IS WELDED TO THE SIDE SHEET (POS. NO. 12)
10. END ANGLES ARE KEFT IN POSITION AND WELDED AS PER SECTION–AA
11. BACK END PLATE AND FRONT END PLATE (POS. NO. 11 & 13) ARE KEFT IN POSITION AND FILLET WELDED BACK STIFFENERS ARE ALSO WELDED (POS. NO. 21, 26) ASSEMBLY IS PUSHED INSIDE HEADER WELD SIDE SHEET TO SIDE SHEET FROM INSIDE AND ALSO WELD END SHEET (POS. NO. 10)
12. INSTALL ONE ROW TRAY ACROSS BACK OF ENCLOSURE OPPOSITE MANHOLE END AND INSTALL ONE ROW LONG TO ENSURE PROPER FIT IN TO ENCLOSURE
13. STACK ONE ROW TRAYS ACROSS THE ENCLOSURE 8 DEEP AND 9 WIDE. TRAYS SHOULD BE FLUSH WITH ENCL. WALL LOCATE SIDE CLIP (POS. NO. 7)
14. ATTACH ANGLES (POS. NO. 9) TO SIDE CLIPS (POS. NO. 7). FLAT BAR LOCATED BELOW ANGLE (POS. NO. 9) SHOULD FIT BETWEEN BACK SIDE SECTION–BB
15. AFTER POSITIONING ANGLE LOCATE SHIMS FOR THESE DETAILS SEE SECTION–BB
16. BEFORE LOCATING SECOND ROW OF TRAYS HOLDDOWN ROD (POS. NO. 28) WITH WASHER AND NUT IS PASSED THROUGH ANGLE (POS.NO.8) AND GUIDED THROUGH TRAY SIDE HOLES TO THE HOLE IN CHANNEL (POS.NO.1). IT IS TIGHTEND AT THE BOTTOM WITH A BEVELLED WASHER (HAND TIGHTEN ONLY)
17. SECOND ROW IS THEN BUTTED UP AGAINEST THE FIRST ROW.
18. THE PROCEDURE IS CONTINUED UNTIL THE LAST ROW.
19. AFETER INSTALLING THE LAST ROW, ONE CAN TIGHTEN NUTS OR CHANNELS FROM THE BOTTOM OF THE ENCOLSURE WHILE A SECOND PERSON CAN TIGHTEN NUTS ON ANGLES FROM THE TOP OF THE ENCLOSURE . THIS CAN BE ACCOMPLISHED BY ENTERING THROUGH THE SWINGING DOOR
20. IMPORTANT:–TRAY SHOULD FIT SNUGLY SO THAT PROCEDURES DOES NOT HAVE TO BE REPEATED
21. HOLES FOR RECEIVING HOLD DOWN RODS SHALL TO BE DRILLED ON BOTTOM CHANNELS (POS. NO. 1) ONLY AND NOT ON END BOTTOM CHANNELS (POS. NO. 49)

NOTES:–

1. TRAY CONFIGURATION 9 WIDE x 10 LONG x 8 HIGH.
2. DIMENSION OF POS. NO. 10 & 11 TO BE ADJUSTED TO MATCH WITH WATER BOX & TRAY ASSEMBLY.
3. FOR DETAILS REFER DRG NO. 1–163–16–11293
4. POS. NO. 10 & 12 SHALL BE CUT TO SIZE ONLY WITH EXACT MESUREMENTS TAKEN, AFTER PLACING THE TRAY ENCLOSURE INSIDE THE HEADER SHELL.
5. FOR POS. NO. 47 REFER DETAIL–D12 OF DRG. 1–163–16–11293.
6. FOR POS. NO. 48 REFER DETAIL–D5 OF DRG. 1–163–16–11293.
7. BAR GRATINGS PROVIDED AT THE BOTTOM, SHALL TOUCH ALL THE SIDES OF TRAY ENCLOSURE WITHOUT ANY GAP, TO PREVENT TRAYS FROM FALLING DOWN.

TYPE OF PRODUCT
OR
OF CUSTOMER/PROJECT

BHEL-HYD EDAS RESTRICTED USE

BHARAT HEAVY ELECTRICALS LTD.
HYDERABAD

	NAME	SIGN.	DATE	NO.OF VAR.
DRN.	A.L RAJAM		01.09.10	NA
CHD.	UMESH MENON		01.09.10	
APPD.	B SRINIVAS		01.09.10	

DEPT.	CRADE OF TOL.DIM. C/M/F	SCALE	WEIGHT (KG)	REF. TO ASSY DRG.	ITEM NO.	NO.OF ITEMS
HEE		N.T.S		NA		NA
CODE 405						

TITLE: TRAY ASSEMBLY

CARD CODE

DRAWING NO. 1–163–16–11461 REV. 00

SHEET No. 1 NO OF SHEETS 1

REV.	DATE	ALTERED	CHECKED	APPD
ZONE				

GENERAL DIMENSIONAL LIMITS,FITS & TOLERANCES AS PER HY0230261

THE INFORMATION ON THIS DOCUMENT IS THE PROPERTY OF BHARAT HEAVY ELECTRICALS LIMITED.
IT MUST NOT BE USED DIRECTLY OR INDIRECTLY IN ANY WAY DETRIMENTAL TO THE INTEREST OF THE COMPANY

INVENTORY NO | SIGN. AND DATE | REF. DRG. NO. | COMPUTER FILE NAME

24-11-2011
15:48:48

This Drawing is printed from Engineering Digital Archive System (EDAS).
Therefore signatures are not essentially required.