(ALL DIMENSIONS IN mm)

DRG.No. 14664450018

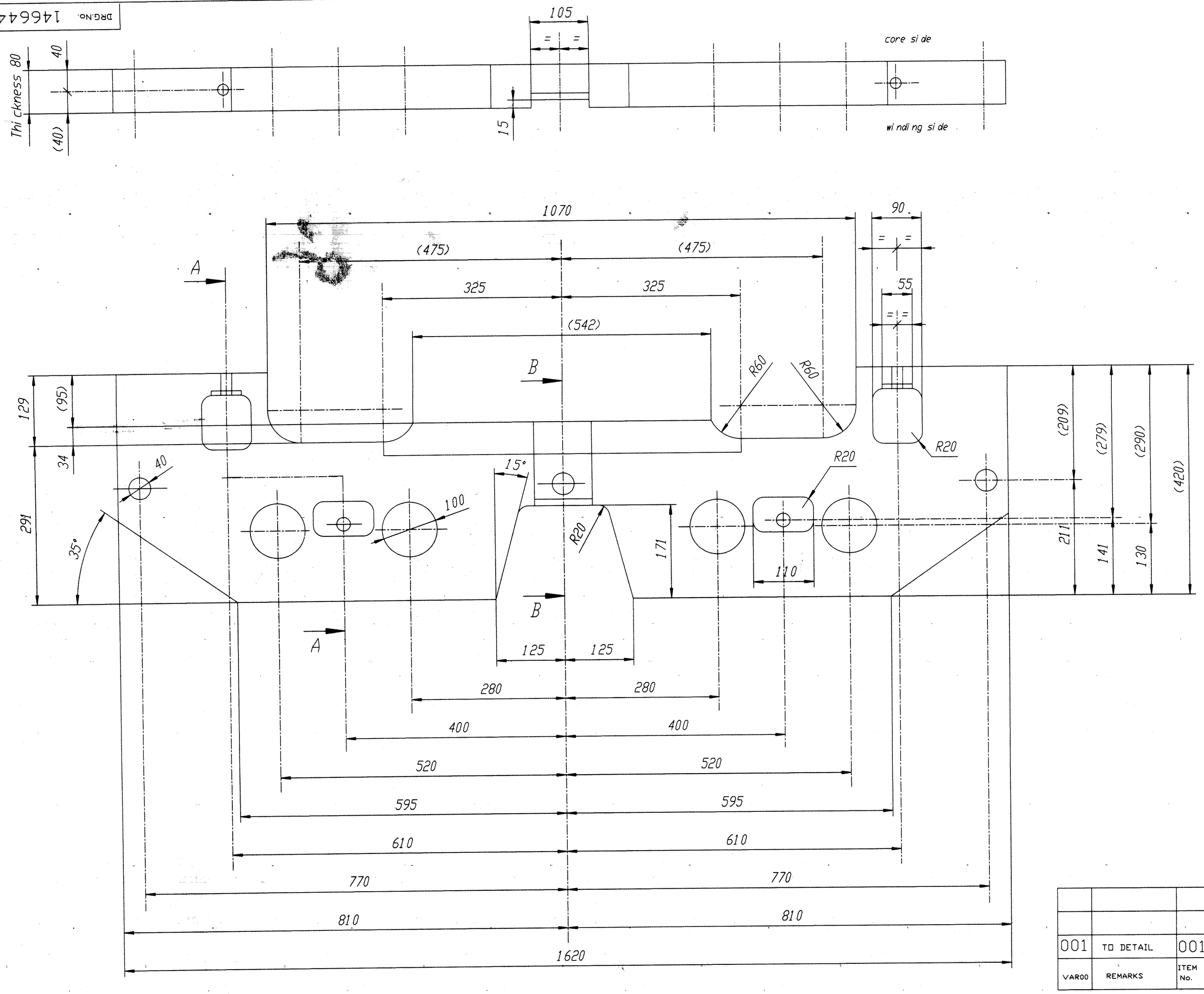

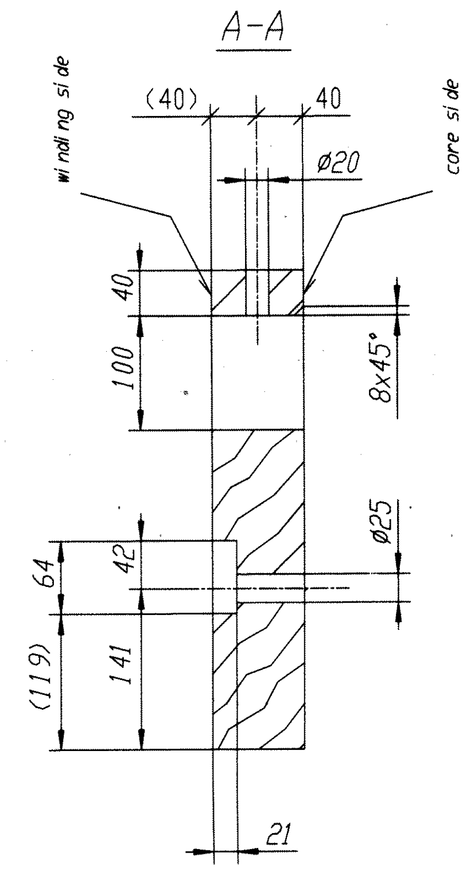

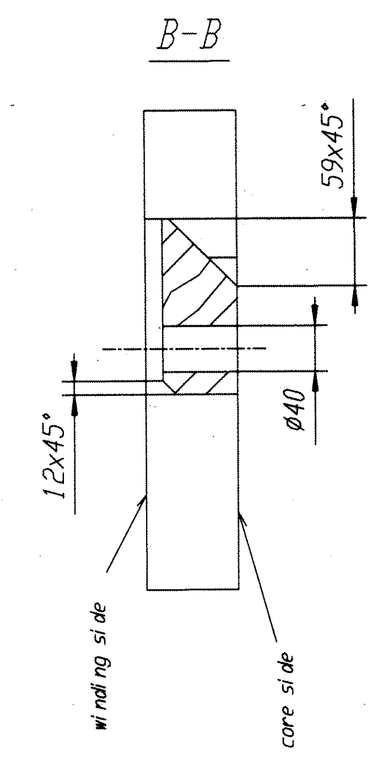

VAR00	REMARKS	ITEM No.	DESCRIPTION	DRAWING NO.	IT.No	MATL.CODE	UNIT WT.	GS
001	TO DETAIL	001	LOWER INFERIOR PLATE PERMA WOOD 80TK x 420 x 1620 LG.			AA 22002	038.296 / 001	
					VAR	MATL.SPECN.	QTY.	

TRE REF. DRGS.
HSTN 205361

ADDITIONAL INFORMATION
W.O. 04947A03001
STATUS OF DRAWING

DISTRIBUTION OF PRINTS

TRE	TRP	BAY 6&7	BAY 9
1	1	2	4

REV	DATE	ALTERED / CHECKED	REV	DATE	ALTERED / CHECKED	REV	DATE	ALTERED / CHECKED

TYPE OF PRODUCT 6531 KVA FRT. LOCO TRFR.
OR
NAME OF CUSTOMER/PROJECT M/S : C.L.W.

BHARAT HEAVY ELECTRICALS LIMITED
JHANSI

	NAME	SIGN.	DATE
DRN	RAMESH KUMAR		29.08.98
CHD	S.P.GUPTA		10.9.98
APPD			11.9.98

DEPT TECH. CODE 406	GRADE OF UN.TOL. DIMC/M/F	SCALE 1:1 & N.T.S.	WEIGHT (Kg) 38.296	REF.TO ASSY DRG. ---	ITEM No.

TITLE
DOWN-LOWER TIGHTENING PLATE

DRAWING No. 14664450018 REV. 00
SHEET No. | No.OF SHEETS

REF.DRG.No. FRT10012.DWG
SIGN.& DATE
INVENTORY NO.