FIRST ANGLE PROJECTION

(ALL DIMENSIONS ARE IN mm)

DRG. NO. 1-61-100-01406

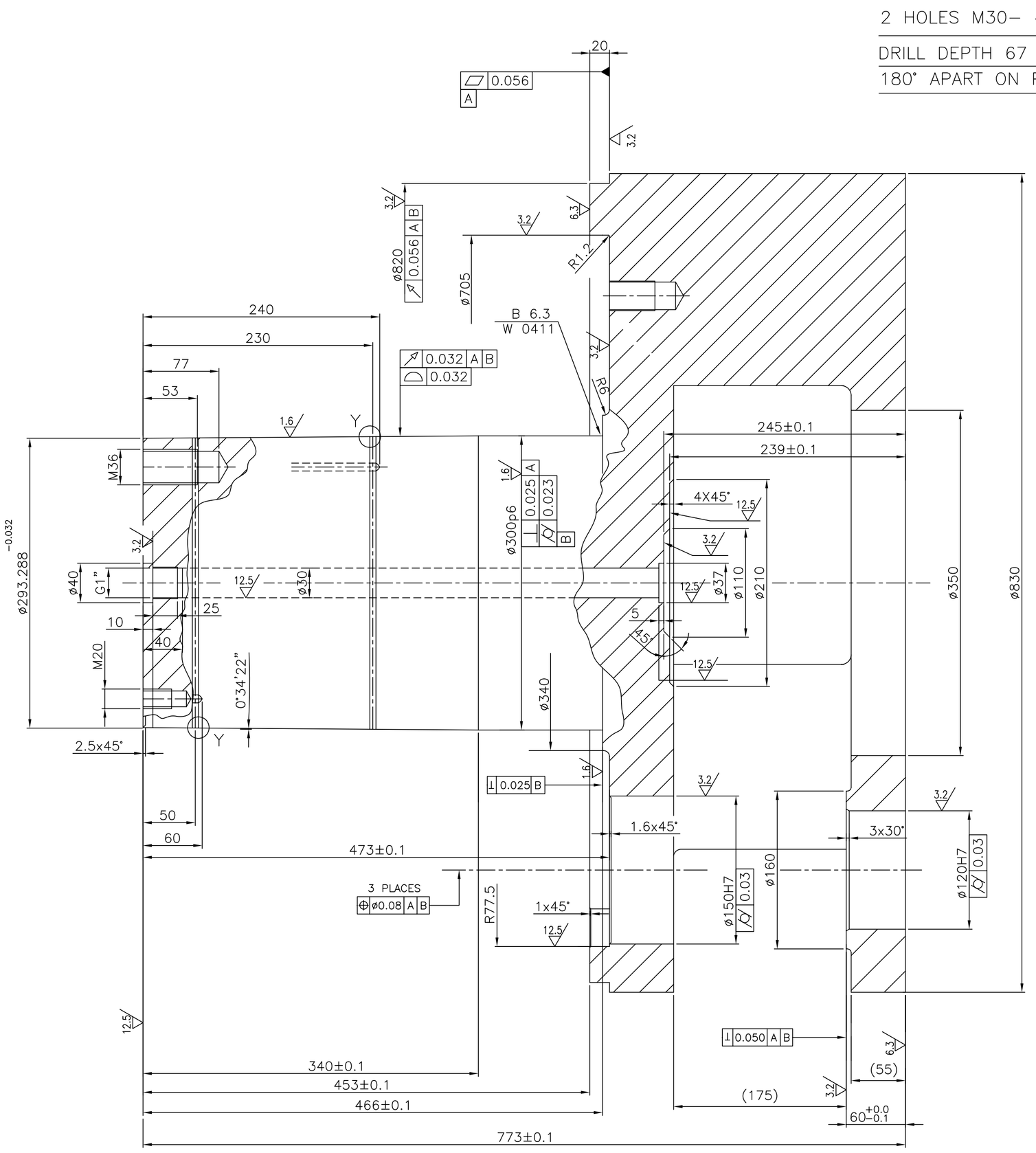

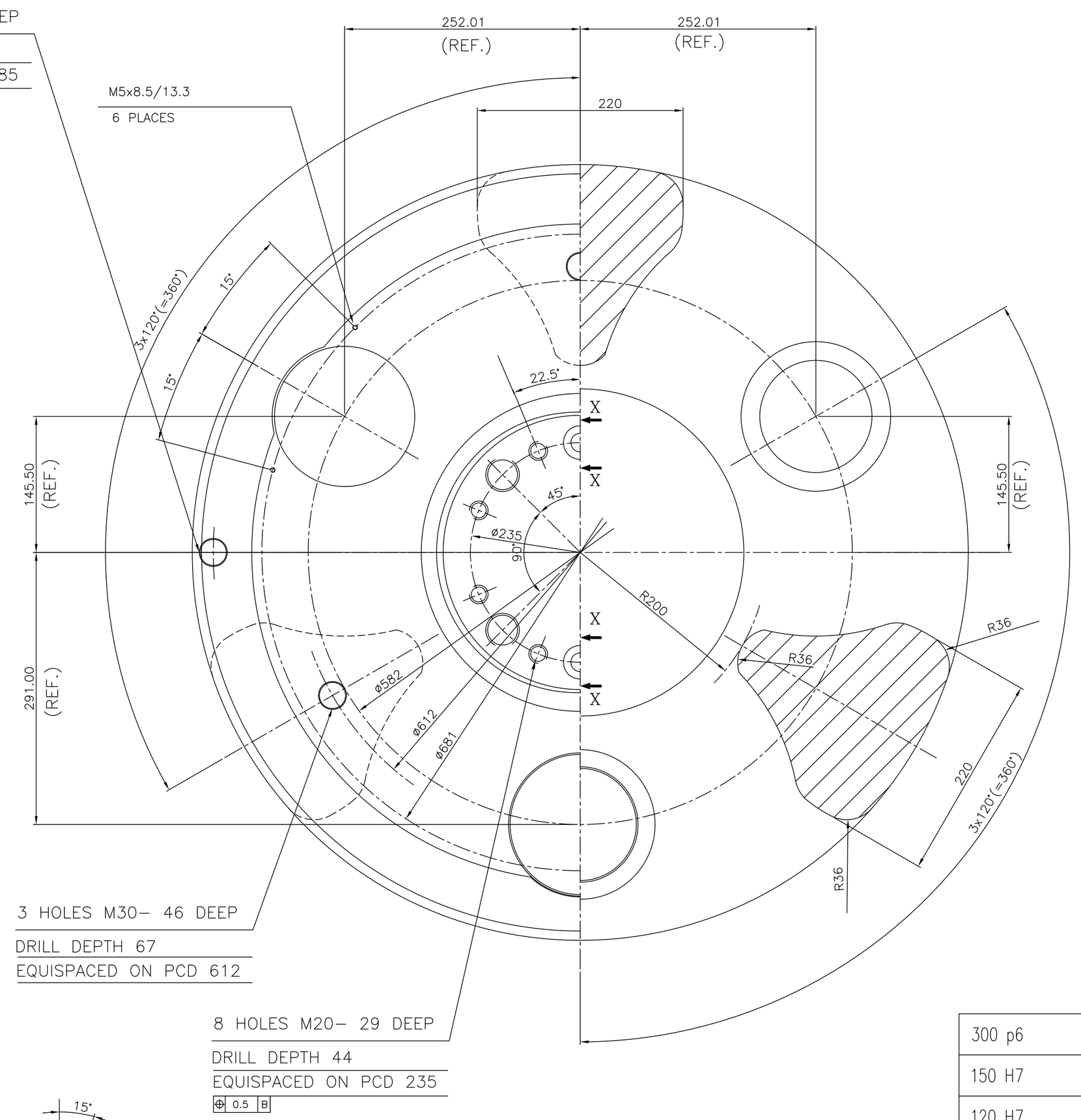

300 p6	+0.088 +0.056
150 H7	+0.040 0
120 H7	+0.035 0
TOLERANCED SIZE	TOLERANCES

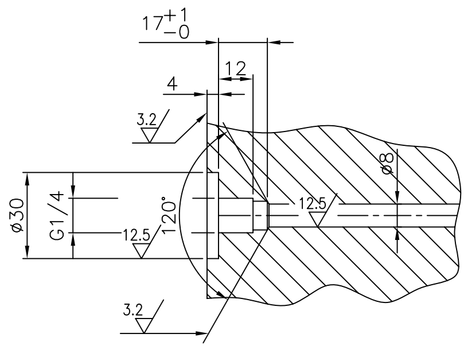

SECTION X–X
(2 PLACES)

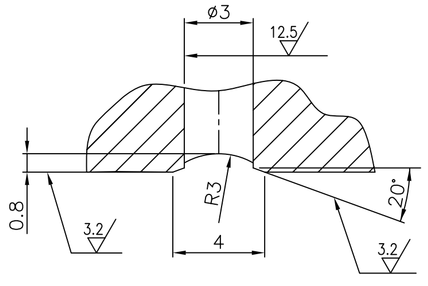

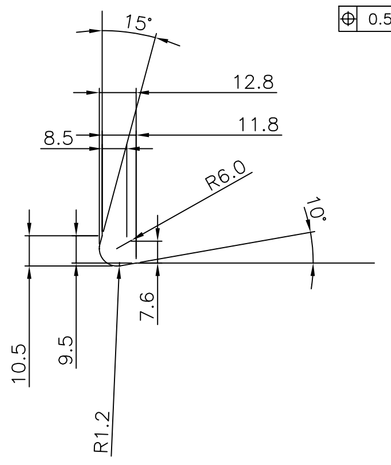

DETAIL B 6.3

ITEM NO	DESCRIPTION	DRAWING NO.	VAR. NO.	RAW MATERIAL SIZE OR CASTING DRG.NO. OR FORGING DRG.NO.	MATERIAL CODE	NET WT.	GROSS WT.
	CASTING			3-61-100-02940	BA9211107601	800.0	916.0
					AA19511	1	
					MATERIAL SPECN.	QUANTITY	

THE FOLLOWING CONDITIONS APPLY EXCEPT OTHERWISE STATED...

1. REF.TO HY0230261 FOR UNSPECIFIED TOLERANCES.
2. CHAMFER M/CD SHARP EDGES 1.2 TO 1.0 AT 45°.
3. INTERNAL M/CD CORNER RADII 1 TO 0.7.
4. THE SURFACE ROUGHNESS WHEREVER NOT SHOWN SHALL BE TAKEN FROM THE SURFACE ROUGHNESS SHOWN OUT SIDE BACK SLASHES GIVEN AT THE TOP MOST RIGHT CORNER OF THE DRG.

TYPE OF PRODUCT
OR
NAME OF CUSTOMER/PROJECT

BHEL BHARAT HEAVY ELECTRICALS LTD. HYDERABAD

	NAME	SIGN.	DATE	NO.OF VAR.
DRN.	POORNIMA		06.06.05	
CHD.	A.SURIN		06.06.05	NA
APPD.	S.GHATGE		06.06.05	

DEPT.	PULV. ENGG	SCALE	WEIGHT (KG)	REF. TO ASSY DRG.	ITEM NO.	NO.OF ITEMS
CODE	4460	1:3	800.0	6-076-394 (0200)	NA	NA

TITLE PLANET CARRIER (MACHINING)

DRAWING NO. 1-61-100-01406 REV. 03

SHEET NO. 01 NO OF SHEETS 01

REV.	DATE	ALTERED	CHECKED	APPD.	ZONE
03	17.10.07		AS	SG	D1 DIM 10 WAS 6
02	4.8.06		AS	SG	H6 TOL ADDED ON HEIGHTS. REDUNDENT DIMS REMOVED.
01	22.5.06				H6 DETAIL B6.3 ADDED.

THE INFORMATION ON THIS DOCUMENT IS THE PROPERTY OF BHARAT HEAVY ELECTRICALS LIMITED.
IT MUST NOT BE USED DIRECTLY OR INDIRECTLY IN ANY WAY DETRIMENTAL TO THE INTEREST OF THE COMPANY

INVENTORY NO | SIGN. AND DATE | REF. DRG. NO. | COMPUTER FILE NAME :