BHARAT HEAVY ELECTRICALS LIMITED

(A Government of India Undertaking)
HIGH PRESSURE BOILER PLANT
PURCHASE DEPARTMENT - FOSSIL BOILERS
THIRUCHIRAPALLI - 620014
TAMILNADU (INDIA)

PHONE :2577419
GRAMS : BHARATELEC
FAX NO: 2520719
E-mail: cmuthuvel@bheltry.co.in
Web:

429-002/A

Enquiry No	Enquiry Date	Due Date for Quotation
1901500146 - 53	12.06.2015	04.07.2015

Please quote Enquiry No, Date and due date in all correspondences. This is only a request for quotation and not an order.
Bid should be submitted in two parts. 1.Techno-commercial bid (Part-I) and 2.Price bid(Part-II) in a separate sealed cover and both covers must be placed in a third cover and sealed. Our Enquiry No., Enq. date & Enq. Due date must be written on all three covers.

Item	Description	Unit	Quantity	Delivery Schedule Quantity	Delivery Schedule Date
10	200150300000 CTR WOOD BOX T-3 AS PER SPECIFICATION PR:CHEM:20/ Rev-03 AND BHEL DRAWING	NO	100.000	100.00	31.10.15
20	200150830000 CTR WOOD BOX T-7 AS PER SPECIFICATION PR:CHEM:20/ Rev-03 AND BHEL DRAWING	NO	100.000	100.00	31.10.15
30	200150940000 CTR WOOD BOX T-12 AS PER SPECIFICATION PR:CHEM:20/ Rev-03 AND BHEL DRAWING	NO	100.000	100.00	31.10.15
40	200151000000 CTR WOOD BOX T-52 AS PER SPECIFICATION PR:CHEM:20/ Rev-03 AND BHEL DRAWING	NO	200.000	200.00	31.10.15
50	200151060000 CTR WOOD BOX T-54 AS PER SPECIFICATION PR:CHEM:20/ Rev-03 AND BHEL DRAWING	NO	50.000	50.00	31.10.15
60	200151110000 CTR WOOD BOX T-58 AS PER SPECIFICATION PR:CHEM:20/ Rev-03AND BHEL DRAWING	NO	140.000	140.00	31.10.15
70	200150740000 CTR WOOD BOX T-23 AS PER SPECIFICATION PR:CHEM:20/ Rev-03 AND BHEL DRAWING	NO	50.000	50.00	31.10.15
80	200054060000 CTR WOOD BOX 1200X900X600MM AS PER SPECIFICATION PR:CHEM:20/ Rev-03 AND BHEL DRAWING.	NO	150.000	150.00	31.10.15
90	200053100000	NO	6000.000	6,000.00	31.10.15

The offers should reach us 30 minutes before the time of opening of tenders.
The offers will be opened at 14.30 hrs on the due date of tender in the presence of tenderers who have submitted their offer and who may like to be present for the tender opening.Late and delayed offers are liable to be rejected.

Yours faithfully,
For **BHARAT HEAVY ELECTRICALS LIMITED**

MUTHUVEL. C
Manager
Purchase / PSS
Mat. Mgmt. / Raw Materials
BHEL, Tiruchirappalli 620 014.

MANAGER / PURCHASE
(FOSSIL BOILERS)
Yours faithfully,

BHARAT HEAVY ELECTRICALS LIMITED

(A Government of India Undertaking)
HIGH PRESSURE BOILER PLANT
PURCHASE DEPARTMENT - FOSSIL BOILERS
THIRUCHIRAPALLI - 620014
TAMILNADU (INDIA)

PHONE :2577419
GRAMS : BHARATELEC
FAX NO: 2520719
E-mail: cmuthuvel@bheltry.co.in
Web:

1901500146 / 12.06.2015 **23505**

	REAPER 70X30X1500MM AS PER SPECIFICATION PR:CHEM:20/ Rev-03				
100	200053000000	NO	5000.000	5,000.00	31.10.15
	CTR WOODEN REAPER 70X30X2000MM AS PER SPECIFICATION PR:CHEM:20/ Rev-03				
110	200053210000	NO	6000.000	6,000.00	31.10.15
	REAPER 70X30X2250MM AS PER SPECIFICATION PR:CHEM:20/ Rev-03				
120	200053220000	NO	5000.000	5,000.00	31.10.15
	REAPER 70X30X2700MM AS PER SPECIFICATION PR:CHEM:20/ Rev-03. RUBBER WOOD REEPERS 70 x 30 x 2700				
130	200053230000	NO	3000.000	3,000.00	31.10.15
	REAPER 70X30X3000MM AS PER SPECIFICATION PR:CHEM:20/ Rev-03.				
140	200053020000	NO	6000.000	6,000.00	31.10.15
	SCANTLING 70X70X1000MM AS PER SPECIFICATION PR:CHEM:20/ Rev-03.				
150	200053010000	NO	2000.000	2,000.00	31.10.15
	REAPER 70X30X2500MM AS PER SPECIFICATION PR:CHEM:20/ Rev-03				
160	200053110000	NO	6000.000	6,000.00	31.10.15
	SCANTLING 70X70X2250MM AS PER SPECIFICATION PR:CHEM:20/ Rev-03.				
170	200054280000	NO	500.000	500.00	31.10.15
	SCANTLING 70X70X2500MM AS PER SPECIFICATION PR:CHEM:20/ Rev-03.				
180	200054290000	NO	5000.000	5,000.00	31.10.15
	SCANTLING 70X70X2700MM AS PER SPECIFICATION PR:CHEM:20/ Rev-03.				
190	200053520001	NO	700.000	700.00	31.10.15
	PLANKS 100X30X3000MM AS PER SPECIFICATION PR:CHEM:17/ Rev-03 (ISPM - 15 STD)				
200	200053520004	NO	600.000	600.00	31.10.15
	PLANKS 200X25X2400MM AS PER SPECIFICATION PR:CHEM:17/ Rev-03 (ISPM - 15 STD)				
	PR:CHEM:17/ Rev-03	N			

The offers should reach us 30 minutes before the time of opening of tenders.
The offers will be opened at 14.30 hrs on the due date of tender in the presence of tenderers who have submitted their offer and who may like to be present for the tender opening.Late and delayed offers are liable to be rejected.

Yours faithfully,
For **BHARAT HEAVY ELECTRICALS LIMITED**

MUTHUVEL. C
Manager
Purchase / PSS
Mgmt / Raw Material
BHEL, Tiruchirappalli.

MANAGER / PURCHASE
(FOSSIL BOILERS)
Yours faithfully,

BHARAT HEAVY ELECTRICALS LIMITED

(A Government of India Undertaking)
HIGH PRESSURE BOILER PLANT
PURCHASE DEPARTMENT - FOSSIL BOILERS
THIRUCHIRAPALLI - 620014
TAMILNADU (INDIA)

PHONE :2577419
GRAMS : BHARATELEC
FAX NO: 2520719
E-mail: cmuthuvel@bheltry.co.in
Web:

1901500146 / 12.06.2015 **23505**

210	200053520017	NO	500.000	500.00	31.10.15

REAPER 70X30X3000MM AS PER
SPECIFICATION PR:CHEM:17/ Rev-03
(ISPM - 15 STD)

General Note:

THIS IS A TWO PART BID ENQUIRY.

VENDORS ARE REQUESTED TO SUBMIT THEIR OFFER ALONG WITH THE DOCUMENTS AS INDICTAED IN THE ANNEXURE - A.

OFFERS SUBMITTED BY THE NEW VENDORS WILL BE EVALUATED BY THE COMMITTEE FOR FURTHER PROCESSING.

ENCLOSURES:

1. ANNEXURE - A
2. ANNEXURE - B
3. ANNEXURE - C
4. ANNEXURE - I
5. PRICE BID
6. PR:CHEM:17 / REV.03 (SPECIFICATION FOR SILVER OAK)
7. PR:CHEM:20 / REV.03 (SPECIFICATION FOR RUBBER WOOD)
8. WOODEN BOX SIZE TABLE
9. TEST CERTIFICATE FORMAT

THE DELIVERY OF THE MATERIAL SHALL BE AS AND WHEN REQUIRED BY BHEL.

All the tenders may be addressed to the following address:

The Tender Opening Cell / MM
Room No: 26, Building 24, Ground Floor
Bharat Heavy Electricals Limited
TIRUCHIRAPALLI 620014

In case personal delivery of the offer, it shall be dropped into the respective box kept in Room No: 26, after duly entering the data in the system.

Offers will be accepted only up to 14.00 Hrs on the due date. Therefore, vendors shall ensure to submit the offers well before this time. All due date extension requirements should be addressed to the respective Purchase mail IDs. All the due date extension requests from vendors will be considered only up to 48 hours before the due date and time.

The offers should reach us 30 minutes before the time of opening of tenders.
The offers will be opened at 14.30 hrs on the due date of tender in the presence of tenderers who have submitted their offer and who may like to be present for the tender opening.Late and delayed offers are liable to be rejected.

Yours faithfully,
For **BHARAT HEAVY ELECTRICALS LIMITED**

MUTHUVEL. C
Manager
Purchase / PSS
Mgmt. / Raw Materials
BHEL, Tiruchirappalli - 620 014

MANAGER/ PURCHASE
(FOSSIL BOILERS)

Yours faithfully,

BHARAT HEAVY ELECTRICALS LIMITED

(A Government of India Undertaking)
HIGH PRESSURE BOILER PLANT
PURCHASE DEPARTMENT - FOSSIL BOILERS
THIRUCHIRAPALLI - 620014
TAMILNADU (INDIA)

PHONE :2577419
GRAMS : BHARATELEC
FAX NO: 2520719
E-mail: cmuthuvel@bheltry.co.in
Web:

1901500146 / 12.06.2015 23505

Vendors are requested to avoid submission of offers through e mail / fax. In case of any unavoidable situation, offers shall be sent through e mail to the following mail ID only tender_cell@bheltry.co.in.

As tenders are being opened by Common Tender Opening Cell, offer covers should be sealed with tenderer's distinctive seal and super scribed with correct Tender No. item of supply and due date of opening.

The offers will be opened at 14.30 hrs on the due date of the tender in the presence of tenderers who have submitted their offer and who may like to be present for the tender opening. Late and delayed offers are liable to be rejected.

Enclosures:

"LD clause has to be confirmed without fail."

The offers should reach us 30 minutes before the time of opening of tenders.
The offers will be opened at 14.30 hrs on the due date of tender in the presence of tenderers who have submitted their offer and who may like to be present for the tender opening.Late and delayed offers are liable to be rejected.

Yours faithfully,
For **BHARAT HEAVY ELECTRICALS LIMITED**

MUTHUVEL. C
Manager
Purchase / PSS
Mgmt. / Raw Materials
BHEL, Tiruchirappalli - 620 014.

MANAGER / PURCHASE
(FOSSIL BOILERS)
Yours faithfully

BHARAT HEAVEY ELECTRICALS LIMITED

TIRUCHIRAPPALLI - 620 014

ANNEXURE - A

TERMS AND CONDITIONS OF THE ENQUIRY (TWO PART BID)

1. The tender will be operated on two part bid basis i.e. *(I).Techno-Commercial Bid & (II).Price Bid.*

2. **The offer is to be submitted in a single envelope containing two envelops. i.e. Part - I (Technical & Commercial Bid) and Part - II (Price Bid).**

2.1. Techno-Commercial Bid:

a) Duly signed Annexure – A & Tender document.
b) Duly filled and signed Techno Commercial Bid (Annexure – B)
c) Duly signed Annexures – C for new vendors (Enclose a copy of supporting documents wherever necessary)
d) Sample should be submitted along with technical bid in the cases where sample is insisted, if sample is not received for the cases where BHEL is insisted, that offer will be summarily rejected).
e) Duly signed TDC and Drawings as an acceptance of specification and item.
e) Un priced bid duly signed.

This Part – I document should be sealed in a separate envelop by clearly marked "Part I – Technical and Un-priced commercial bid" indicating Enquiry No., Due Date., address & reference of the bidder.

2.2. **Price Bid:** Price bid with price details. (***This price bid should be sealed in a separate envelope by clearly marked "Part II – Price bid" indicating Enquiry No., Due Date., Address & reference of the bidder).***

2.3. You are requested to put the above two envelopes (Techno-Commercial Bid & Price Bid) inside a separate larger sealed envelope and this envelope shall be super scribed as "Techno-Commercial Bid and Price Bid " for Enquiry No: .....Dt.: ..... Due Dt.: .....

2.4. Multiple tenders should not be put in a single envelop, quotations should be submitted for each tender separately each tender should be sent. The envelop should be correctly super scribed with correct tender no, date and tender due date. Mail offers should be sent to the correct mail ID provided in S.No.3. Else the quotations will not be included in the respective tenders. BHEL owes no responsibility if the above are complied with.

3. **Tender should not be addressed to any individual's name but only to the following address:**

Tender Opening Cell/MM
Room No.26,
24 Building (Ground Floor),
Bharat Heavy Electricals Limited,
Tiruchirappalli - 620 014.

Mail offers should be addressed to MAIL ID: tender_cell@bheltry.co.in

3.1. Any clarification related to the enquiry should be sent to MAIL ID: gdraju@bheltry.co.in.

4. Please submit point wise compliance to our specifications, terms and conditions. Otherwise it will be presumed that you are accepting BHEL's terms and conditions.

5. The offer should reach this office on or before the due date as mentioned in the enquiry by 14.00 Hrs. Tenders received after 14.00 Hrs will not be considered for evaluation.

6. Validity of quoted rates shall be valid minimum at least 90 days from the date of price bid opening. The quoted/Finalized rates shall be Firm till completion of the supplies.

7. The rates are to be quoted on **F.O.R. destination basis only** (Inclusive of Packing, Forwarding, and Freight and Transit Insurance charges to supplier account. Other delivery conditions ***like Ex-works / Ex-godown will be rejected.***

8. Unloading at BHEL Site has to be done by the suppliers and BHEL will not be in a position to provide any handling / unloading facilities.

9. Payment Terms (Indigenous)

Payment term is 100% direct payment after 45 days from the date of receipt and acceptance of materials. **Any deviation in the above payment term will attract loading as mentioned below.**
"Base rate of SBI (as applicable on the date of bid opening. Techno-commercial bid opening in case of two part bids) + 6% shall be considered for loading for the period of relaxation sought by bidders.

10. Liquidated Damages / Penalty:-

(Any deviations in the LD shall attract loading to the extent of relaxation sought to which it is not agreed by the bidder at offered value).

a. **In case of staggered delivery schedule,** if the Supplier fails to deliver the quantity of any line item of the P.O within the period specified in that line item, Purchaser shall deduct Liquidated Damages, 0.5% of the undelivered portion per week delay or part thereof subject to maximum of 10% of the total order value.

11. Each tender should be sealed with tenderer's distinctive seal and super scribed with correct tender no., item of supply and due date of opening. Two or more quotation should not be sent in one cover but the quotation against each tender should be sent separately to avoid confusion. Tender should not be addressed to any individual's name but only by designation.

12. Tenders should be free from CORRECTION AND ERASURES. Corrections if any must be attested; all amounts shall be indicated both in words as well as in figures. Where there is difference between amount quoted in words and figures, amount quoted in words shall only be considered.

12.1. Discrepancy in "Words "& "Figures "

a) **If, in the price structure quoted for the required goods/services/works, there is discrepancy between the unit price and the total price (which is obtained by multiplying the unit price by the quantity), the unit price shall prevail and the total price corrected accordingly, unless in the opinion of the purchaser there is an obvious misplacement of the decimal point in the unit price, in which case the total price as quoted shall govern and the unit price corrected accordingly.**

b) **If there is an error in a total corresponding to the addition or subtraction of subtotals, the subtotals shall prevail and the total shall be corrected; and**

c) **If there is a discrepancy between words and figures, the amount in words shall prevail, unless the amount expressed in words is related to an arithmetic error, in which case the amount in figures shall prevail subject of (a) and (b) above.**

13. No revision of prices will be entertained after tenders are opened.

14. If any sales tax is payable as extra to the quoted price it should be specifically stated in quotations along with CST & VAT Number failing which the purchaser will not be liable for payment of sales tax. Our TIN 33243560005 dt.01.01.2007 & CST no 239383 DT, 11.06.1991.

15. On the due date of tender opening, only the technical bids will be opened. Technical bids will be evaluated by us and clarifications required, if any, will be called for from the bidders on technical and commercial points. The price bids of techno-commercially suitable bidders will be opened on a later date with prior intimation to respective bidders.

16. Ranking L-1, L-2 etc. shall be done for individual items for the techno-commercially acceptable offers on landed cost to BHEL, Trichy basis and BHEL reserves the right to place order for individual items with different vendors.

17. BHEL reserves the right to increase or decrease the tendered quantity and split the tender quantity in the ratio as indicated below,

- **20% of the tendered quantity is earmarked for MSE suppliers in this tender. If L1 offer is from a Micro / Small enterprise, this provision is not applicable.**

- **Out of the 20% tendered quantity reserved for MSE suppliers, 4% shall be earmarked for procurement from MSE owned by SC / ST entrepreneurs. In event of failure of such Micro and Small enterprises to participate in the tender process or meet the tender requirements and the L1 price, the 4% sub-target for procurement ear-marked MSE owned by SC / ST entrepreneurs shall be met with other MSE enterprise/s.**

- **In case MSE vendor participating in the tender quotes within the price band of L1 + 15%, they will be allowed to supply the portion of the requirement subject to acceptance of L1 price by MSE vendor. In case of more than one such MSE, the supply shall be shared proportionately.**

- **MSE suppliers can avail the intended benefits only if they submit along with the offer, attested copies of either EM II certificate having deemed validity (five years from the date of issue in acknowledgement in EM II) or valid NSIC certificate or EM II certificate along with attested copy of a CA certificate (Format enclosed as per Annexure I where deemed validity of EM II certificate of five years have expired) applicable for the relevant financial year (latest audited). Date to be reckoned for determining the deemed validity will be the date of bid opening (Part 1 in case of two part bid). Non-submission of such documents will lead to consideration of their bids at par with other bidders. No benefits shall be applicable for the enquiry if any deficiency in the above required documents is not submitted before the price bid opening. If the tender is to be submitted through e-procurement portal, then the above required documents are to be uploaded on the portal. Documents should be notarized or attested by a Gazetted officer. This provision for MSE will apply subject to the condition that the participating MSE meets the tender requirements.**

- **In case of any change in the MSE status of the bidder, it shall be the responsibility of the bidder to notify the change as a part of the bid document. If at a later date it comes to the knowledge of BHEL, that the change in the status has not been intimated by the bidder and the order is obtained under the premise of an MSE then BHEL would cancel the pending order against this tender and take necessary steps for suspension of the business dealing with the bidder as per the procurement policy of BHEL.**

- **In case after the bid opening it is seen that no MSE has become L1, then depending on the nature of the item, if it is not possible to split the tendered items / quantities on account of reasons like customer contract requirements of supplying one make for a given project or technical reasons like tendered items being a system, tendered quantity being low etc., then BHEL would not counter offer the L1 prices even though there may be MSE bidders within the +15% band of L1.**

18. a. 20% of the tendered quantity is earmarked for MSE suppliers in this tender. The earmarked 20% quantity will be counter offered to the MSE vendors whose rate is within L1+15% band & up to H1 of MSE. In case of non-acceptance of the counter offering of 20% reservation to MSE vendors, the total tender quantity will be ordered as mentioned in 18 (c). For the balance 80% of the tendered quantity, BHEL reserves the right to split the tender quantity in the ratio of 70% on L1 and 30% on L2 (or) up to previous to H1 inn the order of initial commercial ranking, at matched L1 F.O.R rate. Counter offering of L1 rate will not be made with any H1 vendor of Non-MSE. If none of the counter offered vendors do not match L1 F.O.R rate, 30% quantity will also be ordered on L1 vendor.

b. If L1 (or) any other counter offered vendor is from a Micro / Small enterprise, the 20% earmarking provision is not applicable and order will be split in the ratio of 70:30 (between L1 , L2 (or) up to H1 – 1 at matched L1 F.O.R rate in the order of commercial ranking). Counter offering of L1 rate will not be made with any H1 vendor of Non-MSE.

c. If there is no response form MSE vendors the above split up of 18 (a) & 18 (b) will not be applicable and the total tender quantity will be split and ordered in the ratio of 70:30 between L1 / L2 (or) up to H1 – 1 at matched L1 F.O.R rate in the order of commercial ranking.

d. In case of counter offering rate does not accepted by any one of the countered vendor, such counter offer quantity also will be ordered on L1 vendor.

e. Items where enquiry quantity is 100 or less than 100, such enquiry items will be ordered on L1 alone. MSE and 70:30 ratio split up is not applicable for these items.

19. In the event of more than one vendor becoming L1 for any of the item / items, the enquiry quantity for those item / items will be shared equally among all the L1 vendors. For such item / items splitting will be done among L1 vendors alone and not as mentioned in the point no 18 above.

20. Lowest price received against BHEL tenders need not be the technically acceptable one and in that case BHEL reserves the right not to consider the same. The purchaser shall be under no obligation to accept the lowest or any other tender and shall be entitled to accept or reject any tender in part or full without assigning any reason whatsoever.

21. BHEL reserves the right to negotiate or refloat the tender opened if L1 price is not the lowest acceptable price to them inter-alia other reasons.

22. PACKING AND MARKING: The supplier shall arrange for securely protecting and packing the materials to avoid loss or damages during transit.

23. RISK PURCHASE: Alternatively the purchaser at his option will be entitled to terminate the contract and to purchase elsewhere at the risk and cost of the seller either the whole of the goods or any part which the supplier has failed to deliver or dispatch within the time stipulated as aforesaid or if the same were not available, the best and the nearest available substitutes therefore. The supplier shall be liable for any loss, which the purchaser may sustain by reason of such risk purchases in addition to penalty at the rate mentioned in our LD clause.

24. CENVAT CREDIT: If any Excise Duty is payable, the Chapter Head / Sub -head reference and the rate of the duty should be quoted. If the Tenderer is availing CENVAT credit for this input material, the effect of Proforma credit should be passed on to the purchaser. Tenderer under "CENVAT" shall be preferred.

25. Any other conditions which might have been quoted by the seller and are in contravention to the terms prescribed in the order and which have not been specifically accepted in by purchaser will not be applicable to the contract.

26. Bidders not confirming to the enquiry specification mentioned will be disqualified.

27. The correspondence between the bidder and BHEL through email is considered as valid document legally though not signed. It is treated as valid confirmations made on behalf of the respective company and comes under the legal ambit of the business transaction and hence binding on both the parties.

28. Bidders participating in the tender should declare in their technical bid whether they have been black-listed / kept on hold / given Business holiday for a specified period by any Public Sector Undertaking or Government Departments. The reasons for such action with details and the current status of such hold shall be clearly furnished to BHEL. If no such details are mentioned in the offer, it will be construed that the bidder is not under any such hold. However, at a later date if it comes to the notice of BHEL about any such hold under enforcement, BHEL reserves the right to reject the offer at any point of time and also under any stage of the finalization of the tender. Such bidders will not be permitted to participate in the further tender proceedings and will be communicated suitably.

29. Conditional offers will be rejected.

MUTHUVEL. C
Manager
Purchase / PSS
Matls. Mgmt. / Raw Materials
BHEL, Tiruchirappalli - 620 014.

COMMERCIAL TERMS CONFIRMATION REQUIRED FROM THE SUPPLIERS
TO BE SUBMITTED ALONG WITH PART – I (TECHNO COMMERCIAL BID)

ANNEXURE -B

SL NO	DESCRIPTION	BHEL REQUIREMENTS	SUPPLIER CONFIRMATION / DEVIATION (STRIKEOUT WHICHEVER IS NOT APPLICALE)	
1	VALIDITY	90 DAYS FROM DATE OF PRICE BID OPENING	NON DEVIATABLE	
2	PRICE QUOTED	FOR-DESTINATION BHEL STORES / TRICHY	NON DEVIATABLE	
3	EXCISE DUTY WITH CESS	SUPPLIER OPTION	INCLUSIVE / EXTRA (Please quote % below) _____ %	
4	VAT / CST against form 'C'	SUPPLIER OPTION	INCLUSIVE / EXTRA (Please quote % below) _____ %	
5	DEIVERY SCHEDULE	STAGGERED MANNER AS PER THE DELIVERY SCHEDULE ATTACHED	NON DEVIATABLE	
6	PAYMENT TERMS	AFTER 45 FROM THE DATE OF RECEIPT AND ACCEPTANCE OF MATERIALS AT BHEL (For details please read S.No:9 of "Annexure – A")	ACCEPTED / NOT ACCEPTED	
7	LD CLAUSE	0.5% PER WEEK TO MAXIMUM OF 10% (For details please read S.No:10 of "Annexure – A")	NON DEVIATABLE	
8	RISK PURCHASE CLAUSE	(For details please read S.No:23 of "Annexure – A")	NON DEVIATABLE	
9	CONTACT PERSON DETAILS	NAME: MOBILE NO: EMAIL :		
10	CONFIRMATION OF SPECIFICATION TO SUPPLY CHEMICALLY TREATED RUBBER WOOD ITEM AS PER PR.CHEM.20 (REV.03) DT.15.11.2005 AND BHEL DRAWING ATTACHED. **(BIDDERS NOT CONFIRMING THE SPECIFICATION AS PER ATTACHMENT WILL BE DISQUALIFIED)**		CONFIRM	NOT CONFIRM
11	CONFIRMATION OF SPECIFICATION TO SUPPLY SILVER OAK WOOD (ISPM) ITEMS AS PER PR.CHEM.17 (REV.03) DT.08.02.2014 AND BHEL DRAWING ATTACHED. **(BIDDERS NOT CONFIRMING THE SPECIFICATION AS PER ATTACHMENT WILL BE DISQUALIFIED)**		CONFIRM	NOT CONFIRM
12	***"Vendors should submit two copies of relevant Test Certificate for the rubber wood as per PR CHEM: 20 along with first supply".*** *(Offers received without confirmation of the above points will be summarily rejected).*		CONFIRM / NOT CONFIRM	
13	***Vendors should submit two copies of relevant test certificate along with Delivery Challan for Silver oak items issued by accredited agencies of ISPM. Copy of certificate / authorization issued by ISPM to the accredited agency should be provided along with first supply.***		CONFIRM / NOT CONFIRM	
14	**Bidders have to confirm that whether they have been black-listed / kept on hold / given Business holiday for a specified period by any Public Sector Undertaking or Government Departments/any other units of BHEL (With reference to S.No.28 of Annexure – A).**			

(BIDDERS NOT CONFIRMING TO ANY OF THE ABOVE REQUIRED CONDITIONS WILL BE REJECTED)

SIGN AND SEAL OF
AUTHORIZED PERSON

Annexure - C (For NEW VENDORS only)

Sl No	Details	Attached by the vendor
1	Nature of ownership & relevant documents. *(Proprietorship-Professional Tax Regn & Municipal Regn; Partnership firm – Partnership Deed; Co-operative society – Society rules & bye laws ; Private/Limited Company – memorandum & Articles of Association)*	YES / NO
2	Manufacturing range & facilities: **(If applicable)** • List down the product range & specification details. • List of Manufacturing facilities/equipment's (including material handling facility)	 YES / NO YES / NO
3	Licence details of the factory **(If applicable)**	
4	• Permanent Account No • Central Sales Tax registration number • State sales Tax / TIN number • Excise duty registration number • Excise control code number • Service tax registration number • Regn number of category as per MSMED Act	YES / NO YES / NO YES / NO YES / NO YES / NO YES / NO YES / NO
5	If registered with any other BHEL unit • Letter of registration with BHEL unit **(If applicable)** • Proof of successfully executed or executing purchase orders	 YES / NO YES / NO
6	Accreditation certificate for ISO:9001 / TOC of Quality System manual / ISO:14000 / OHSAS ISO 18000 **(If applicable)**	YES / NO
7	Balance Sheet for the last three years along with the audit report	YES / NO
8	Copy of successfully executed P.O in supplying Chemically treated rubber wooden items and Silver oak items (i.e. Boxes / Scantlings / Reapers) in the last two years ending with May - 2015.	YES / NO
9	COMPLETION CERTIFICATE FOR THE P.O SUBMITTED AGAINST S.NO.8 ABOVE. Following documents can be submitted against the completion certificate: (Acknowledgement from the representative customer to whom the materials are supplied).	YES / NO

SUTHUVEL
Manager
Purchase / PCP
Mktg. Mgmt. / Raw Materials
BHEL, Tiruchirapalli - 620 014.

Annexure - I

Certificate by Chartered Accountant on letter head

This is to Certify that M/S.....
(Hereinafter referred to as 'company') having its registered office at.....
is registered under MSMED Act 2006, (Entrepreneur Memorandum No (Part-11) .... dt.....
Category: (Micro/Small)). (Copy enclosed).

Further verified from the Books of Accounts that the investment of the company as per the latest audited financial year..... as per MSMED Act 2006 is as follows:

- **For Manufacturing Enterprises:** Investment in plant and machinery (i.e. original cost excluding land and building and the items specified by the Ministry of Small Scale Industries vide its notification No.S.0.1722(E) dated October 5, 2006:
  Rs..... Lacs
- **For Service Enterprises:** Investment in equipment (original cost excluding land and building and furniture, fittings and other items not directly related to the service rendered or as may be notified under the MSMED Act, 2006:
  Rs.... .... Lacs

(Strike off whichever is not applicable)

The above investment of Rs..... Lacs is within permissible limit of Rs..... Lacs for..... Micro / Small (Strike off which Is not applicable) Category under MSMED Act 2006.

Or

The company has been graduated from its original category (Micro/ Small) (Strike off which is not applicable) and the date of graduation of such enterprise from its original category is.....(dd/mm/yyyy) which is within the period of 3 years from the date of graduation of such enterprise from its original category as notified vide 5.0. No. 3322(E) dated 01.11.2013 published in the gazette notification dated 04.11.2013 by Ministry of MSME.

Date:

(Signature)

Name -

Membership number -

Seal of Chartered Accountant

DELIVERY SCHEDULE FOR ENQUIRY 1901500146-53

ENQUIRY SL NO	MATERIAL CODE	MATERIAL DESCRIPTION	QTY	SUPPLY SCHEDULE		
				FIRST MONTH MONTH FROM PO DATE	SECOND MONTH FROM PO DATE	THIRD MONTH FROM PO DATE
00010	200150300000	CTR WOOD BOX T-3	100.000	50	20	30
00020	200150830000	CTR WOOD BOX T-7	100.000	50	20	30
00030	200150940000	CTR WOOD BOX T-12	100.000	40	40	20
00040	200151000000	CTR WOOD BOX T-52	200.000	90	50	60
00050	200151060000	CTR WOOD BOX T-54	50.000	20	15	15
00060	200151110000	CTR WOOD BOX T-58	140.000	50	50	40
00070	200150740000	CTR WOOD BOX T-23	50.000	20	15	15
00080	200054060000	CTR WOOD BOX 1200X900X600MM	150.000	80	35	35
00090	200053100000	CTR WOODEN REAPER 70X30X1500MM	6,000.000	3000	1500	1500
00100	200053000000	CTR WOODEN REAPER 70X30X2000MM	5,000.000	3000	1000	1000
00110	200053210000	CTR WOODEN REAPER 70X30X2250MM	6,000.000	3000	1500	1500
00120	200053220000	CTR WOODEN REAPER 70X30X2700MM	5,000.000	3000	1000	1000
00130	200053230000	CTR WOODEN REAPER 70X30X3000MM	3,000.000	2000	500	500
00140	200053020000	CTR WOODEN SCANTLING 70X70X1000MM	6,000.000	3000	1500	1500
00150	200053010000	CTR WOODEN REAPER 70X30X2500MM	2,000.000	2000	0	0
00160	200053110000	CTR WOODEN SCANTLING 70X70X2250MM	6,000.000	3000	1500	1500
00170	200054280000	CTR WOODEN SCANTLING 70X70X2500MM	500.000	0	250	250
00180	200054290000	CTR WOODEN SCANTLING 70X70X2700MM	5,000.000	3000	1500	1500
00190	200053520001	SILVER OAK PLANKS 100X30X3000	700.000	300	200	200
00200	200053520004	SILVER OAK PLANKS 200X25X2400	600.000	300	150	150
00210	200053520017	SILVER OAK REAPER 70X30X3000MM	500.000	300	100	100

BHARAT HEAVEY ELECTRICALS LIMITED
TIRUCHIRAPPALLI - 620 014

PRICE BID FORMAT

ENQUIRY NO:

DATE:

DUE DATE:

ENQ SL NO	MATERIAL DESCRIPTION	BASIC PRICE INCLUSIVE OF PACKING & FORWARDING, FREIGHT & INSURANCE AND DISCOUNT	EXCISE DUTY WITH EDUCATION CESS %	SALES TAX			OTHER COST IF ANY
				VAT %	CST WITH C FORM %	CST WITHOUT C FORM %	
		1	6	8	8	8	16

RECORD OF REVISIONS

Rev. No.	Date	Details of revision	Remarks
00	01.12.1992	New	--
01	25.03.1998	Clauses 1.1 , 2.1 ,7.1, 8.1,10.1 Modified Clauses 9.2 ,9.3 9.4 Added	--
02	01.04.2003	Clause 8 & 10 deleted Clause 9.2 & 9.4 modified and renumbered.	--
03	04.02.2014	Total revision to comply ISPM certification	--

SPECIFICATION FOR EXPORT PROJECT PACKING WOOD – SILVER OAK

Prepared by	Reviewed by		Approved by
K.RAMESH AE -2. Plant Laboratory	V.RAJASEKHARAN Manager Plant Laboratory	V.DEVARAJKUMAR Sr.Manager MM/RM	Dr.K.P.DHANDAPANI AGM Plant Laboratory

1.0 **DEFINITION:**

1.1 Silver Oak (Grevillea Robusta) conforming to IS 5966 seasoned and treated as per ISPM-15 for Export orders of packing cases to be stored outside and exposed.

2.0 **SPECIES:**

2.1 Species shall be Silver Oak (Grevillea Robusta).

3.0 DIMENSIONS:

3.1 Dimensions and descriptions given by the indenting department will be Incorporated in the purchase order.

4.0 **TOLERANCE FOR DIMENSION:**

4.1 Dimensional tolerance shall be as per Table- A.

Table - A- Dimensional tolerance

Length	+10 mm -0 mm
Width	+03 mm -0 mm
Thickness	+03 mm -0 mm

5.0 **FREEDOM FROM DEFECTS:**

5.1 Planks, Scantlings, Battens shall be free from common timber defects like cracks, bends and knots.

5.2 Bow tolerance shall be 2 mm per 300 mm length.

6.0 Supply of planks shall be with one side planning, joint planed and two Longitudinal edges, prepared for lap joint of 12.5mm on opposite sides.

7.0 **MOISTURE CONTENT:**

7.10 Moisture content shall be within 15% when tested as per method given in IS 287.

8.0 **SPECIAL REQUIREMENT FOR SUPPLY FOR EXPORT ORDERS:**

8.10 For supplies made for export orders, the wood shall be treated to ensure protection from fungi, termites and other organisms.

8.20 The process of treatment shall be as per ISPM- 15 (INTERNATIONAL STANDARDS FOR PHYTOSANITARY MEASURES ISPM-15 REGULATION OF WOOD PACKAGING MATERIAL IN INTERNATIONAL TRADE)

8.30 The supplier shall provide the ISPM treatment certification 2 copies from approved agencies along with the supply.

9.0 **SYMBOL:**

9.10 The ISPM symbol shall be marked each 500 mm of space in all consignments.

****

SPECIFICATION FOR PACKING WOOD – RUBBER WOOD

Prepared by	Reviewed by	Approved by		
V.Rajasekaran Sr. Scientific Officer Plant Laboratory	S. Prasanna Venkatesan Sr.Manager Plant Laboratory	R. Easwaran SDM/QA(Proc)& Plant Laboratory	D. Joseph Shipping/FB	MM/FB/PSS

एम. मुरुगैया / M. MURUGIAH
उप महाप्रबंधक / Dy. GENERAL MANAGER
सा. प्र.-एफ बी / M M-F B
भारत हेवी इलेक्ट्रिकल्स लिमिटेड / BHARAT HEAVY ELECTRICALS LIMITED
तिरुचिरापल्ली / TIRUCHIRAPPALLI-620 014

CBF113664

RECORD OF REVISIONS

Rev. No.	Date	Details of revision	Remarks
00	01.12.1992	New	--
01	25.03.1998	Clause nos. 2.2, 7.1, 7.3, 8.1 & 9.1 have been modified.	--
02	01.04.2003	Scope and requirements added. Clauses 2,8, & 9 delete, and renumbered.	--
03	15-11-2005	Clause 3.5.2 modified	Refer minutesMM/FP/PSS dt 9/11/05

1.0 SCOPE:

This specification prescribes the requirements of rubber wood intended for packing purposes.

2.0 DEFINITION:

RUBBER WOOD – Seasoned and chemically treated rubber wood in converted form (scantlings, boxes / shooks) intended for packing cases to be stored outside and exposed.

3.0 REQUIREMENTS:

3.1 Supply of planks to shipping / FB shall be with one side planning, joint planed and two longitudinal edges prepared for lap joints of 12.5 mm on opposite sides.

3.2 The rubber wood to be supplied shall be seasoned as per IS 1141 – 1993. "SEASONING OF TIMBER – CODE OF PRACTICE".

3.3 The process for chemical preservative treatment shall be as per IS 401 – 2001, "PRESERVATION OF TIMBER – CODE OF PRACTICE".

3.4 For chemical treatment, the preservative chemicals used shall be Copper, Chrome, and Boron (CCB) composition.

3.5 DIMENSIONS AND ITS TOLERANCE:

3.5.1 Dimensions shall be as specified in Purchase Order.

3.5.2 The dimensional tolerance shall be as follows:

Length	: ± 10 mm
Width	: ± 4 mm
Thickness	: ± 3 mm for thickness up to 30 mm : ± 4 mm for thickness above 30 mm
Bow	: ± 4 mm per 300 mm

CBF113664

3.6 **FREEDOM FROM DEFECTS:**

3.6.1 Planks, Scantlings, Battens shall be free from defects like cracks, bends and knots.

3.7 The material shall also comply with the requirements given in Table – 1.

Table – 1 REQUIREMENTS FOR RUBBER WOOD

S. No.	Characteristics	Requirement
1	Species	Rubber
2	Chemical depth penetration Test	6.0 mm. (min)

****

CBF113664

DETAILS OF wooden BOX DIMENSION , WEIGHT AND VOLUME

BOX TYPE	BOX WT (KG)	INSIDE DIMENSION IN MM LENGTH	BREADTH	HEIGHT	OUTSIDE DIMENSION IN MM LENGTH	BREADTH	HEIGHT	VOLUM IN CUBIC METER
1A	10	320	250	260	450	300	280	0.038
1	15	320	250	430	450	370	580	0.097
2	25	430	370	430	570	490	590	0.165
3	65	670	670	470	770	770	700	0.415
4	75	710	630	600	810	730	840	0.497
5	95	850	630	670	950	730	900	0.624
6	100	1000	770	670	1100	870	915	0.876
7	80	1100	430	670	1200	520	900	0.562
8	170	1200	1200	900	1300	1300	1150	1.944
10	155	1300	770	1050	1400	860	1320	1.589
11	225	2500	850	800	2600	950	1050	2.594
12	305	2000	1500	1200	2100	1600	1400	4.704
14	260	1850	1050	1250	1950	1150	1480	3.319
15	180	2000	800	800	2100	900	990	1.871
16	345	3000	1050	1000	3100	1220	1250	4.728
17	470	2600	1500	1600	2700	1600	1830	7.906
29	390	3600	1100	1100	3700	1220	1350	6.094
21	25	250	250	600	380	380	770	0.111
22	30	250	250	880	380	380	1040	0.150
23	25	300	300	700	425	425	850	0.154
24	45	380	380	880	510	510	1050	0.273
27	80	570	570	1400	700	700	1560	0.764
28	105	575	575	1875	710	710	2040	1.028
62	130	600	1125	1000	700	1325	1200	1.113
63	55	800	370	750	900	500	800	0.360
51	260	2775	850	680	2870	950	950	2.590
52	255	2000	950	740	2100	1050	1050	2.315
53	220	1600	1120	700	1700	1220	980	2.033
54	490	2500	1900	1200	2600	2000	1450	7.540
55	525	2900	1900	1400	3000	2000	1650	9.900
56	370	3000	1000	900	3100	1100	1200	4.092
57	450	3200	2200	850	3300	2300	1100	8.349
58	325	2200	1100	750	2300	1200	1050	2.898
60	485	2300	2200	1200	2350	2300	1500	8.108
61		675	675	2000				

304 MM = 1 FEET

SUPPLIER'S LOGO

TEST CERTIFICATE FOR RUBBER WOOD (Model Format)

TEST REPORT No.:XXXX / Dated dd-mm-yy

DC No.:XXX/ Dated dd-mm-yy

1	NAME OF THE FIRM	
2	PO No.& DATE	
3	NAME OF CUSTOMER	BHEL, TRICHY
4	MATERIALS	CHEMICALLY TREATED RUBBER WOOD
5	QUANTITY &SIZE DETAILS	AS PER DC No. XXX / Dated dd-mm-yy
6	SPECN TO WHICH MATERIALS SUPPLIED	PR:CHEM: 20/03
7	DIMENSIONAL REPORT	AS SPECIFIED IN PR: CHEM: 20/03, Cl. 3.5
8	NAME OF THE SPECIES IDENTIFIED (TRADE NAME)	RUBBER WOOD
9	DATE OF SEASONING / TYPE OF SEASONING	dd-mm-yy / Kiln Seasoning
10	PERCENTAGE OF MOISTURE CONTENT IN SEASONED WOOD BEFORE CHEMICAL TREATMENT (Test as per IS:401, Annex C)	XX %
11	DATE OF CHEMICAL TREATMENT	
12	TYPE OF CHEMICAL TREATMENT FOLLOWED	PRESSURE TYPE / VACUUM IMPREGNATION (Tick as applicable)
13	TYPE OF CHEMICAL PRESERVATIVES USED	Copper - Chromium - Boron (C.C.B)
14	DEPTH OF PENETRATION OF PRESERVATIVE CHEMICALS, mm	___ mm (As per PR: CHEM: 20/03, Cl 3.7)
	Presence of Copper (Test as per IS:401, Annex D)	Present
	Presence of Chromium (Test as per IS:401, Annex D)	Present
	Presence of Boron (Test as per IS:401, Annex D)	Present
15	PERCENTAGE OF MOISTURE CONTENT AFTER CHEMICAL TREATMENT (Test as per IS:401, Annex C)	xx% (WHEN DISPATCHED)
16	Certified that the above supply conforms to the specification. PR: CHEM: 20 / 03.	

SIGNATURE OF QUALITY INSPECTOR WITH SEAL

FOR TOLERANCES OF UNTOLERANCED DIMENSIONS DURING MANUFACTURE REFER RELEVANT ECD/QP

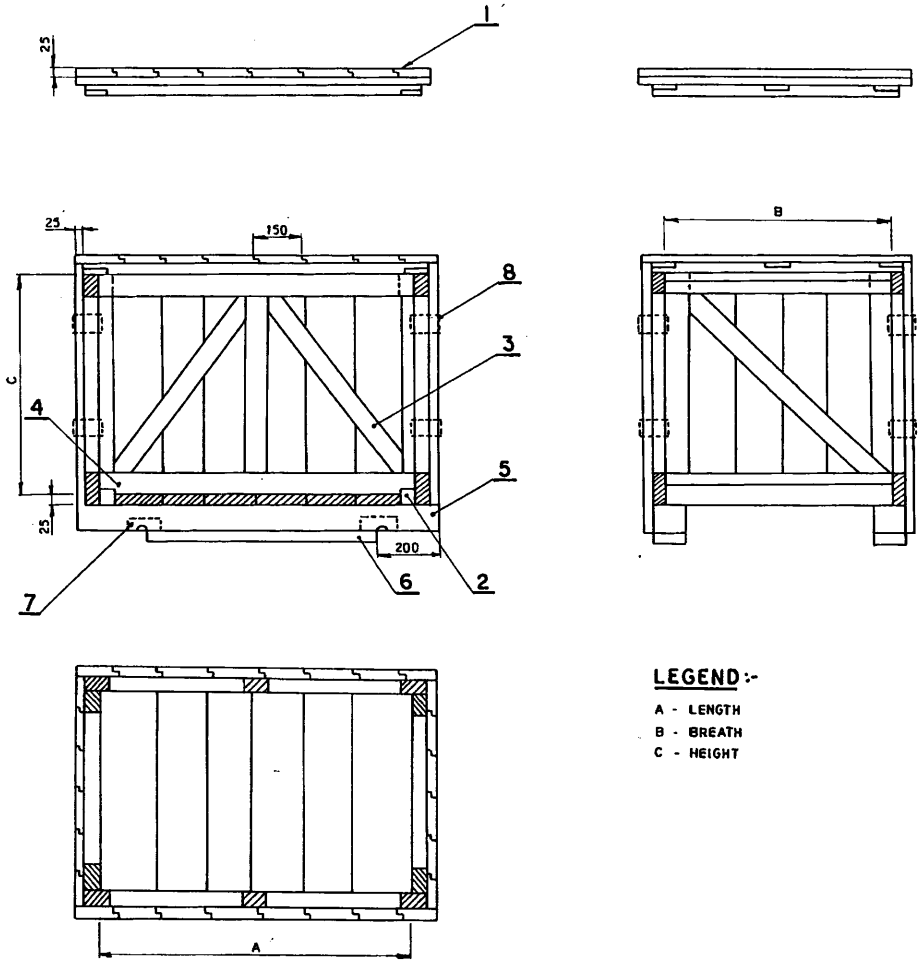

SL NO.	DRG. NO.	TYPE	DIMENSIONS A	B	C	MATL-CODE
1	2-V-0001-05779	3	670	670	470	20 015 030
2	2-V-0002-05779	4	710	630	600	20 015 080
3	2-V-0003-05779	5	850	630	670	20 015 081
4	2-V-0004-05779	6	1000	770	670	20 015 082
5	2-V-0005-05779	7	1100	430	670	—
6	2-V-0006-05779	9	1250	570	1100	20 015 083
7	2-V-0007-05779	10	1300	770	1050	20 015 084
8	2-V-0008-05779	13	1700	600	700	20 015 086
9	2-V-0009-05779	14	1850	1050	1250	20 015 095
10	2-V-0010-05779	15	2000	800	800	20 015 088
11	2-V-0011-05779	5A	900	450	950	20015210

ITEM No	DESCRIPTION	SIZE (MM)	MATERIAL
1	SOFT WOOD PLANKS	25X150	WOOD
2	END TRAVERS BAR	50X50	WOOD
3	DIAGONAL BRACE	75X25	WOOD
4	SOFT WOOD BATTERNS	75X25	WOOD
*5	RUNNERS	70X70 (FOR TYPE 3,4,5,5A,6,7 9, 13) 100X100 (FOR TYPE 10,14,15)	WOOD
6	RESTING BEAM	150X75X50	WOOD
7	SLING PLATE	—	M.S. SHEET
8	SIDE PLATE	—	M.S. SHEET

* 2 NOS TO BE PROVIDED

LEGEND:-

A - LENGTH
B - BREATH
C - HEIGHT

NOTES FOR PACKING:

1. THE INSIDE OF ALL SIDES EXCEPT BOTTOM SHALL BE FULLY COVERED BY POLYETHYLENE SHEET SO AS TO AVOID ENTRY OF RAIN WATER.
2. SECURE THE ASSEMBLIES WITH ENOUGH SIDE SUPPORTS TO AVOID MOVEMENT OF ASSEMBLIES DURING TRANSIT.

NO. OF PIECES	DESCRIPTION	SIZE, PIECE/TOTAL NO	INT. MAT/ STD. NO.	FINAL MATERIAL	SCRAP MAT	NET WT.(KG)	GROSS WT.(KG)	DRAWING NO.	ITEM NO

BHARAT HEAVY ELECTRICALS LTD.,
BOILER PLANT UNIT, TIRUCHIRAPALLI-14

FIRST ANGLE | SCALE: NTS | DRAWN: ECD/D | CHECKED: R.L. | APPROVED: M.R.K. | DATE: 14/12/96 | TOTAL NET WT.(KG) | TYPE | SUPSD DRG. NO. 2-SH-BN-022

ALL DIMENSIONS IN MILLIMETRES

TITLE: **PACKING BOX (VALVES)**

DRAWING NO. **2-V-0000-05779** | REVISION 02

33-114

CAUTION
THE INFORMATION CONTAINED IN THIS DRAWING IS THE PROPERTY OF BHARAT HEAVY ELECTRICALS LTD., BOILER PLANT UNIT, TIRUCHY-14 AND SHALL NOT BE USED WITHOUT THEIR EXPRESS WRITTEN PERMISSION IN ANY FORM OR PART THEREOF FOR ANY OTHER PURPOSE THAN FOR WHICH IT IS SENT TO YOU.

REV	DATE	ALTD:	REV.	DATE	ALTD:- T.L.	REV	DATE	ALTERED P.R.K.
0		CHD-8.	02	16.5.96	CHD&APPD:	01	01.12.95	CHECKED SCS

DIMNS. IN SL.No.11 900, 450 & 950 WERE 800, 400 & 900 RESPECTIVELY

ZONE

RUNNER SIZE CHANGED FOR TYPE No: 10, 14 & 15 REQUEST FROM SHIPPING.

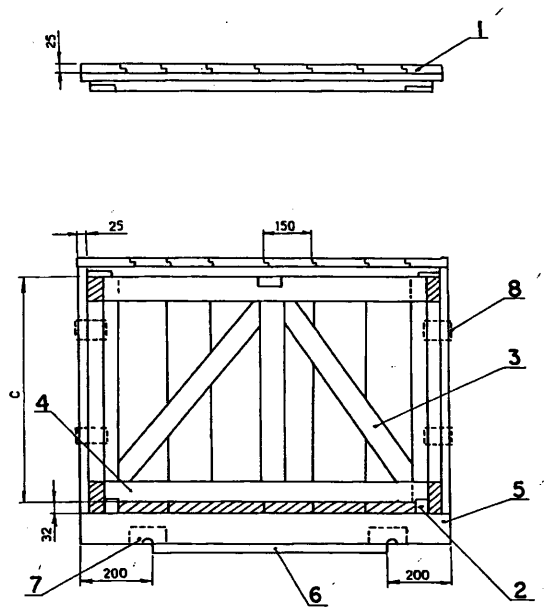

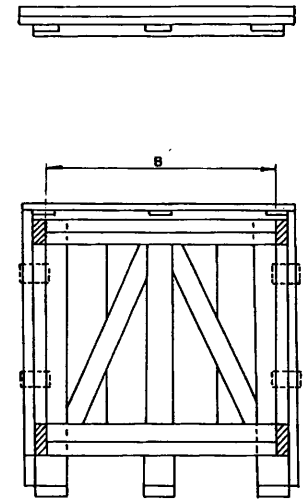

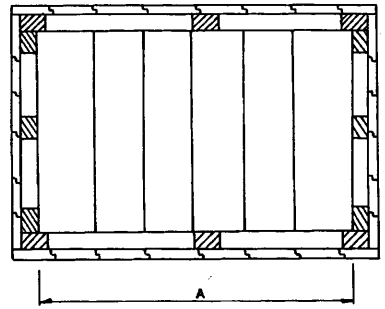

SL NO	DRG. NO.	TYPE	DIMENSIONS A	B	C	MATL-CODE
1	2-V-0001-05780	8	1200	1200	900	20 015 092
2	2-V-0002-05780	11	2500	850	800	20 015 093
3	2-V-0003-05780	12	2000	1500	1200	20 015 094
4	2-V-0004-05780	16	3000	1000	1000	20 015 096
5	2-V-0005-05780	17	2600	1500	1600	20 015 097
6	2-V-0006-05780	29	3600	1100	1100	20 015 102

NOTES FOR PACKING:-

1. THE INSIDE OF ALL SIDES EXCEPT BOTTOM SHALL BE FULLY COVERED BY POLYETHYLENE SHEET SO AS TO AVOID ENTRY OF RAIN WATER.
2. SECURE THE ASSEMBLIES WITH ENOUGH SIDE SUPPORTS TO AVOID MOVEMENT OF ASSEMBLIES DURING TRANSIT.

ITEM NO	DESCRIPTION	SIZE (MM)	MATERIAL
1	SOFT WOOD PLANKS	25X150	WOOD
2	END TRAVERS BAR	50X50	WOOD
3	DIAGONAL BRACE	75X25	WOOD
4	SOFT WOOD BATTERNS	75X25	WOOD
*5	RUNNERS	100X100	WOOD
6	RESTING BEAM	150X75X50 (FOR 27 TYPE) / 100X50 (FOR TYPES 12, 17 & 29)	WOOD
7	SLING PLATE	–	M.S. SHEET
8	SIDE PLATE	–	M.S. SHEET

* 3 NOS TO BE PROVIDED

LEGEND

A = LENGTH

B = BREATH

C = HEIGHT

NO. OF PIECES	DESCRIPTION	SEN. PRO/SEC.NO	INT. MAT/ STD.NO.	FINAL MATERIAL	SCRAP CODE	NET WT.(KG)	GROSS WT.(KG)	DRAWING NO.	ITEM NO

BHARAT HEAVY ELECTRICALS LTD.,

BOILER PLANT UNIT, TIRUCHIRAPALLI-14

FIRST ANGLE	SCALE NTS	DRAWN	ECDIO	TOTAL NET WT.(KG)	
		CHECKED	R.L.	TYPE	
		APPROVED	M.R.K.		
ALL DIMENSIONS IN MILLIMETRES		DATE	16/12/94	NEW /OLD DRG. NO.	2.SH.BW.023

TITLE: PACKING BOX (VALVES)

DRAWING NO. 2-V-0000-05780

REVISION 0

CAUTION

THE INFORMATION CONTAINED IN THIS DRAWING IS THE PROPERTY OF BHARAT HEAVY ELECTRICALS LTD., BOILER PLANT UNIT, TIRUCHY-14 AND SHALL NOT BE USED WITHOUT THEIR EXPRESS WRITTEN PERMISSION IN ANY FORM OR PART THEREOF FOR ANY OTHER PURPOSE THAN FOR WHICH IT IS SENT TO YOU.

33-114

A	DATE	ALTERED
ZONE		CHECKED

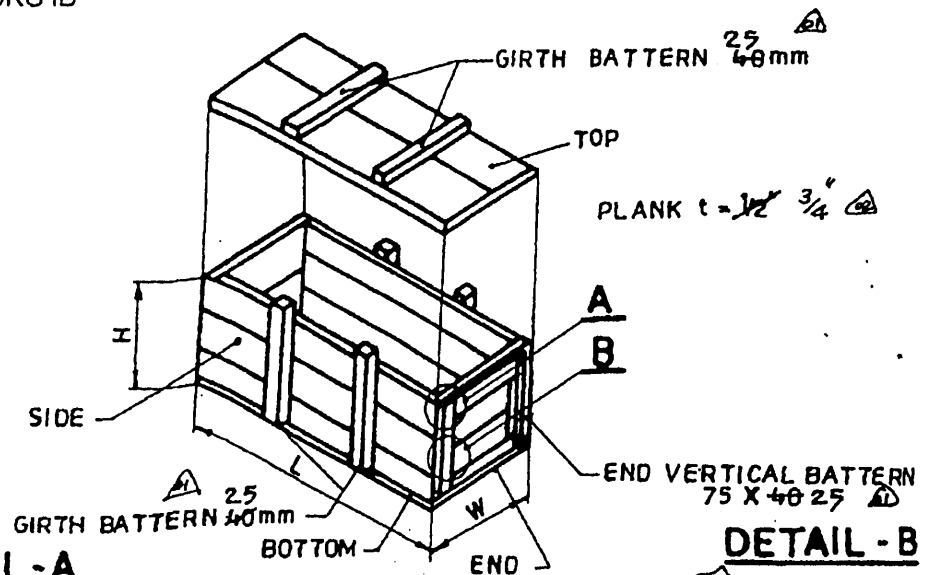

DETAIL-A

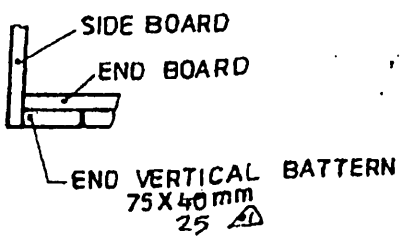

DETAIL-B

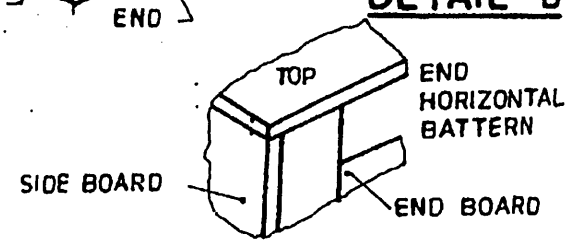

TYPE NO.	L	W	H	
1A	320	250	260	
1	320	250	430	
2	430	370	430	

NOTES:-

1. ALL DIMENSIONS ARE IN MM.
2. L, W, H ARE INNER DIMENSIONS OF THE BOX.
3. FOR TYPE NO 1A & 1 END VERTICAL BATTERN SHALL BE FLUSH ON BOTH ENDS WITH HARD BOARD TO WRITE THE DESPATCH DETAILS.

NO. OF PIECES	NAME - DIMENSIONS	SEMI - PRODUCT	FINAL MATERIAL	INITIAL MATERIAL	SCRAP WGT	NET WT (kg)	GROSS WT (kg)	DRAWING NO.	ITEM NO.
REMARKS				TOTAL NET WT (kg)					

SCALE				ALTERATIONS	DATE	SIGNATURE	ALTERATION INDEX
	DRAWN	R.N. R.NATRAJAN 24/10/92		40mm TO 25 mm	26.9.94		
	CHECKED	K.S.S 26/10/92		PLANK 3/4" WAS 1/2" NOTE 3 ADDED.	01.12.95		
	APPROVED	D.K. 26.10.92	TRANS. COPY NO.				
	SYSTEM OFFICER						
	DATE						

TYPE	GROUP	OLD DRG.	NEW DRG
TITLE		DRAWING NO.	
WOODEN PACKING CASE		4-V-4000-07183	2