FIRST ANGLE PROJECTION (ALL DIMENSIONS IN MILLIMETRES)

DRAWING No. 2-80-921-12826

CAUTION THE INFORMATION ON THIS DOCUMENT IS THE PROPERTY OF BHARAT HEAVY ELECTRICALS LTD. IT MUST NOT BE USED DIRECTLY OR INDIRECTLY IN ANY WAY DETRIMENTAL TO THE INTEREST OF THE COMPANY.

05-228/C

ALL DIMENSIONS ARE IN MILLIMETRES

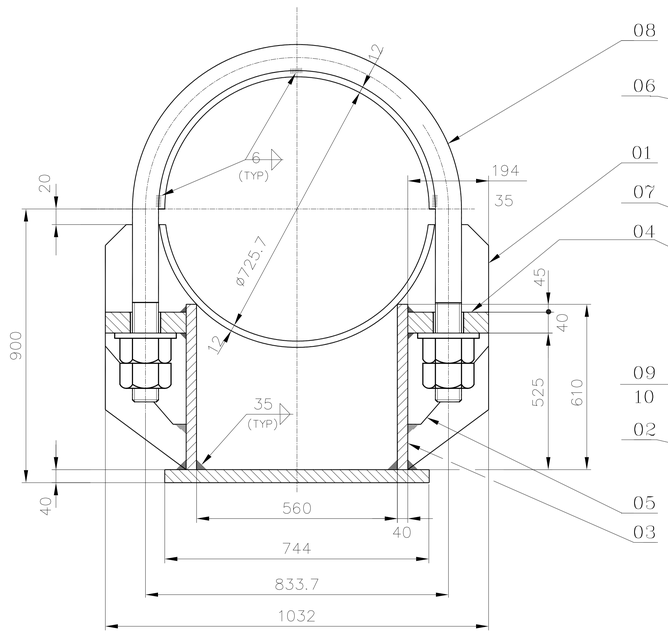

SECTION – AA

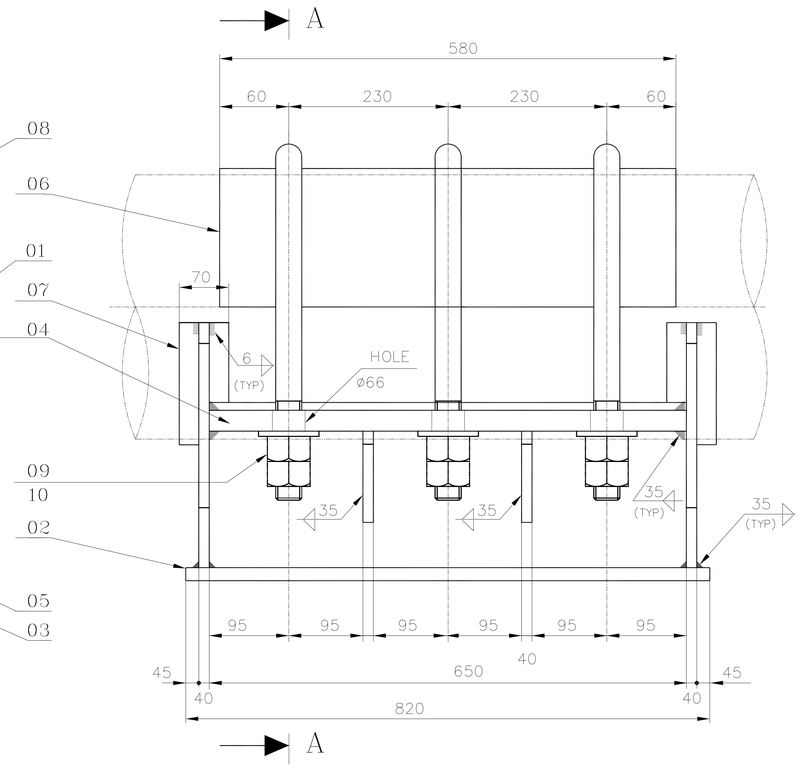

NOTES: –

01 FOR NOTES REFER DRAWING NO.4-80-800-34106

DESIGN LOAD : 25000KG

DESIGN TEMP. : 596 °C

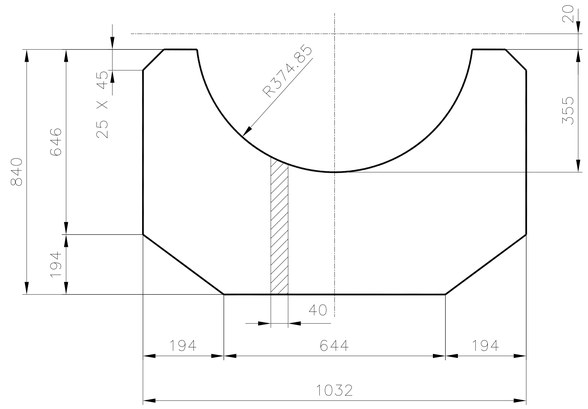

ITEM No.01

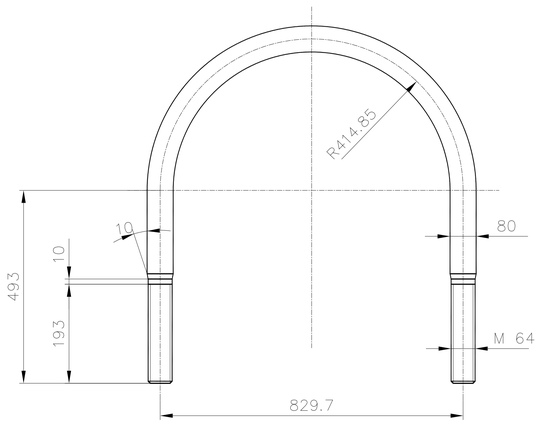

ITEM No.08

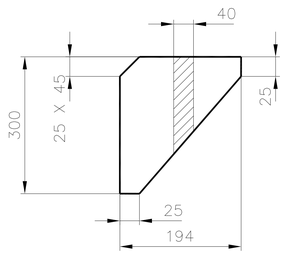

ITEM No.05

NOTES: –

01. METRIC SCREW THREADS AS PER IS:4218.

ITEM NO.	DESCRIPTION	DRAWING NO.	NO. / VAR NO.	MATL CODE / MATL SPECN	A / C	UNIT WT. / QTY.
10	PUNCHED WASHER A64	4-80-999-99026		159422680000		0.513
			08	SA387Gr22CL2		6
09	NUT M64 X4	4-80-999-99045		413244006400	C	2.460
			02	SA194Gr7		12
08	'U' ROD M64 ROD DIA80 ; L=2289	2-80-921-12826		153394050000	C	89.441
				SA182GrF91CL2		3
07	PAD PLATE-2 PL 12THKX70X1263	2-80-921-12826		159421550000	C	4.858
				SA387Gr91CL2		2
06	PAD PLATE-1 PL 12THKX580X1303	2-80-921-12826		159421550000	C	41.705
				SA387Gr91CL2		1
05	STIFFNER PLATE PL 40THKX194X300	2-80-921-12826		159421570000	C	5.895
				SA387Gr91CL2		4
04	FIXING PLATE PL 40THKX194X650	2-80-921-12826		159421570000	C	31.826
				SA387Gr91CL2		2
03	VERTICAL PLATE PL 40THKX610X650	2-80-921-12826		159421570000	C	124.501
				SA387Gr91CL2		2
02	BOTTOM PLATE PL 40THKX732X820	2-80-921-12826		159422720000	C	188.475
				SA387GR22CL2		1
01	SIDE PLATE PL 40THKX840X1032	2-80-921-12826		159421570000	C	193.845
				SA387Gr91CL2		2

REV	DATE	ALTD / CHD	REV	DATE	ALTD / CHD	REV	DATE	ALTD / CHD
ZONE			ZONE			ZONE		

TYPE OF PRODUCT OR NAME OF CUSTOMER/PROJECT

BHARAT HEAVY ELECTRICALS LTD., PIPING CENTRE, MADRAS

	NAME	SIGN	DATE	NO OF ITEMS
DRN	YOGESH		03.01.14	
CHD	C.DEEPAK		03.01.14	
APPD	M.MANO		03.01.14	

DEPT. / CODE	GRADE OF UN TOL. DIM	SCALE	WEIGHT (Kg).	NAME OF ORIGINAL ORGANISATION	ITEM No.
	C/M/F	NTS	1264.741		

TITLE: SHOCK ABSORBER CLAMP FOR PIPE OD 711 (AS)

CARD CODE: U 01

DRAWING No. 2-80-921-12826

REV 00

SIZE A2