FIRST ANGLE PROJECTION(ALL DIMENSIONS IN MILLIMETRES)

CAUTION THE INFORMATION ON THIS DOCUMENT IS THE PROPERTY OF BHARAT HEAVY ELECTRICALS LTD. IT MUST NOT BE USED DIRECTLY OR INDIRECTLY IN ANY WAY DETRIMENTAL TO THE INTEREST OF THE COMPANY

DRAWING No 2-80-830-13002

NOTES

FOR NOTES REFER DRAWING NO.4-80-800-34106

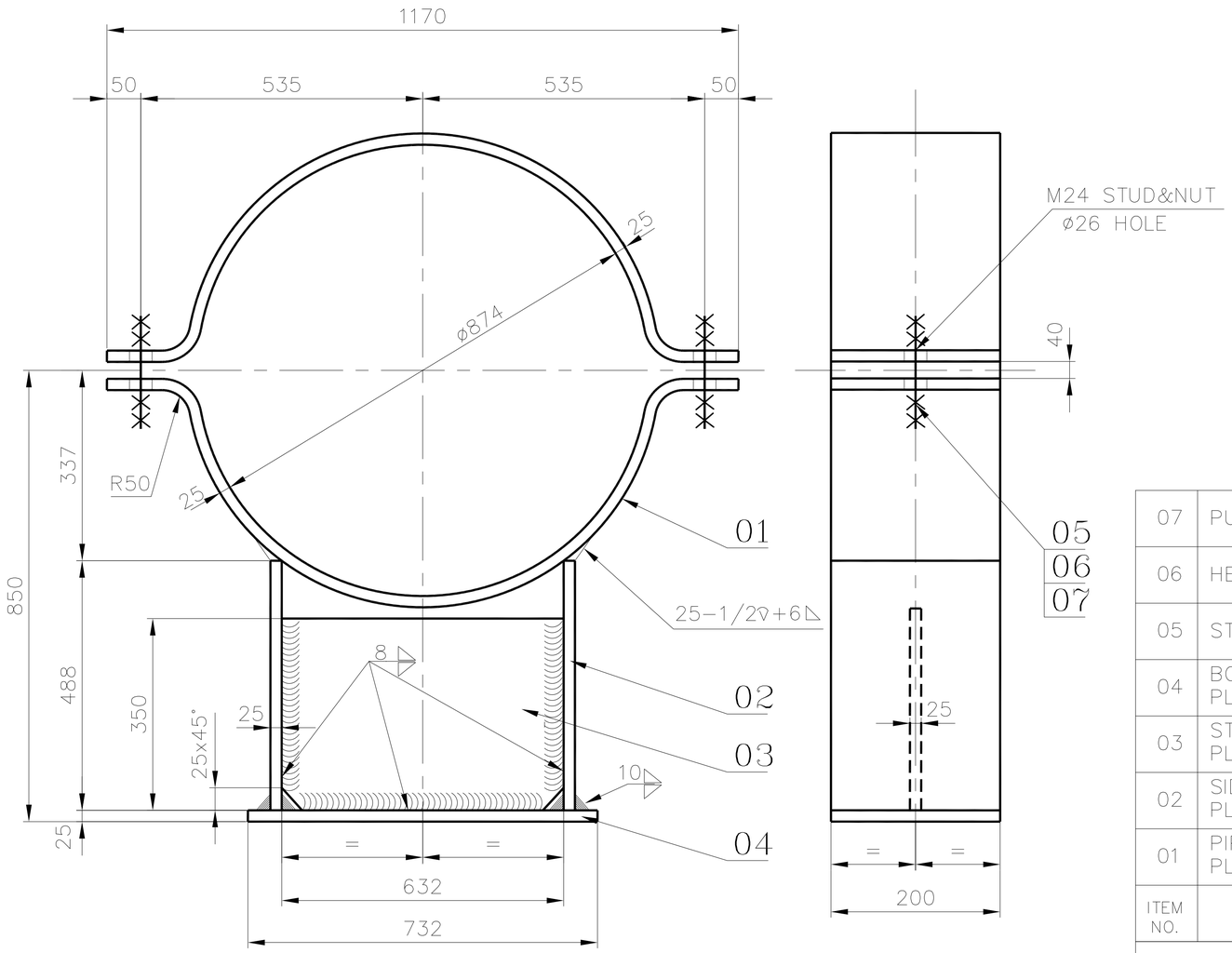

LOAD: 170KN, TEMP. 596°C

ITEM NO.	DESCRIPTION	DRAWING NO.	ITEM NO. / VAR NO.	MATERIAL CODE / MATERIAL SPEC.	A/C	UNIT WT. / QTY.
07	PUNCHED WASHER A24	4-80-999-99026		15 942 265 0000		0 031
			03	SA 387 GR22		4
06	HEX NUT M24	41324 24000		41 324 000 2400		0 110
				SA 194 GR7		8
05	STUD M24X3.0 L=220	4-80-999-99320		94 822 242 2600		0 660
				SA 193 B16		2
04	BOTTOM PLATE PL 25X200X732	2-80-830-13002		15 942 270 0000	C	28 742
				SA 387 GR22CL2		1
03	STIFFNER PLATE PL 25X350X632	2-80-830-13002		15 942 156 0000	C	43 410
				SA 387 GR91CL2		1
02	SIDE PLATE PL 25X200X488	2-80-830-13002		15 942 156 0000	C	19 154
				SA 387 GR91CL2		2
01	PIPE CLAMP PL 25X200X1582	2-80-830-13002		15 942 156 0000	C	61 896
				SA 387 GR91CL2		2

TYPE OF PRODUCT
OR NAME OF
CUSTOMER/PROJECT

BHARAT HEAVY ELECTRICALS LTD.,
PIPING CENTRE, MADRAS

	NAME	SIGN	DATE	NO OF ITEMS
DRN	JAGAN		27.06.14	
CHD	SARAVANAN C		27.06.14	
APPD	K V R		27.06.14	

REV	DATE	ALTERED / CHECKED
ZONE		

DEPT. / CODE	GRADE OF UN TOL. DIM	SCALE	WEIGHT (Kg).	NAME OF ORIGINAL ORGANISATION	ITEM No.
	C/M/F	N.T.S	234.973		

TITLE
BEARING CLAMP
FOR PIPE OD 864 (P91)

CARD CODE	DRAWING No.	REV
U 01	2-80-830-13002	00

SIZE A3