FIRST ANGLE PROJECTION

(ALL DIMENSIONS ARE IN mm)

DRG. NO. 2-38142-01082 SHT. 1 OF 1

NOTES:-

1. ALL DIMENSIONS ARE IN MILLIMETRES AND LEVELS ARE IN METRES.
2. (100) CORRESPONDS TO FINISHED FLOOR LEVEL. (R.L. +7.00M.) & (99.00) CORRESPONDS TO FINISHED GROUND LEVEL. (R.L. +6.00M.).
3. REINFORCEMENT STEEL SHALL BE OF Fe500 GRADE, CONFORMING TO IS:1786-2008.
4. øT DENOTES HIGH YIELD STRENGTH HIGH BOND DEFORMED BARS OF GRADE Fe500 CONFORMING TO IS:1786-2008.
5. CLEAR COVER TO MAIN REINFORCEMENT IS 50MM AT END & 50MM AT SIDES FOR COLUMNS(25ø ROD) & 50MM FOR GRADE BEAM
6. ALL LAP LENGTHS SHALL CONFORM TO IS :456-2000.
7. THIS DRAWING SHALL BE READ IN CONJUNCTION WITH TERMS AND CONDITIONS OF THE CONTRACT AND SPECIFICATIONS AND ALL REFERENCE DRAWINGS.

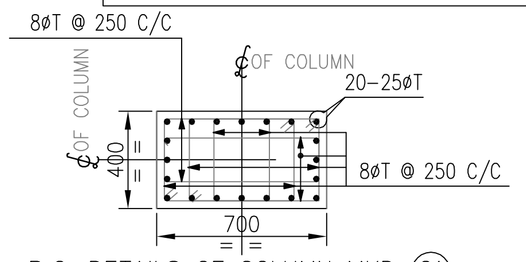

R.C. DETAILS OF COLUMN MKD. (C1)

(2 Nos. REQUIRED THUS)

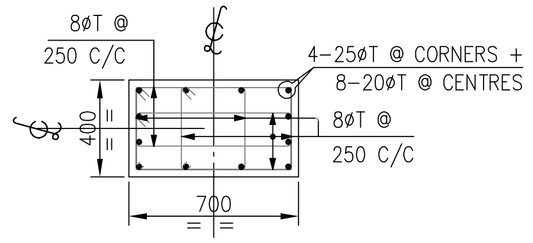

R.C. DETAILS OF COLUMN MKD. (C2)

(2 Nos. REQUIRED THUS)

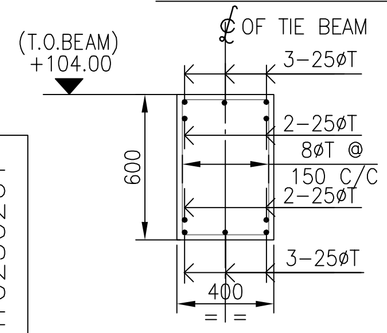

TYPICAL R.C. DETAILS OF TIE BEAM MKD. (TB1)

(SCALE 1:25)

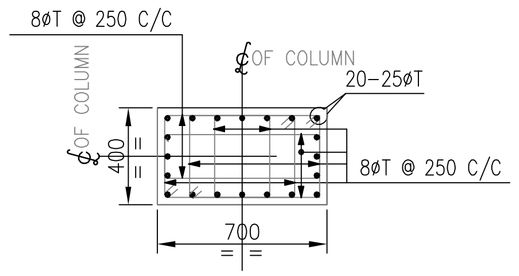

R.C. DETAILS OF COLUMN MKD. (C3)

(2 Nos. REQUIRED THUS)

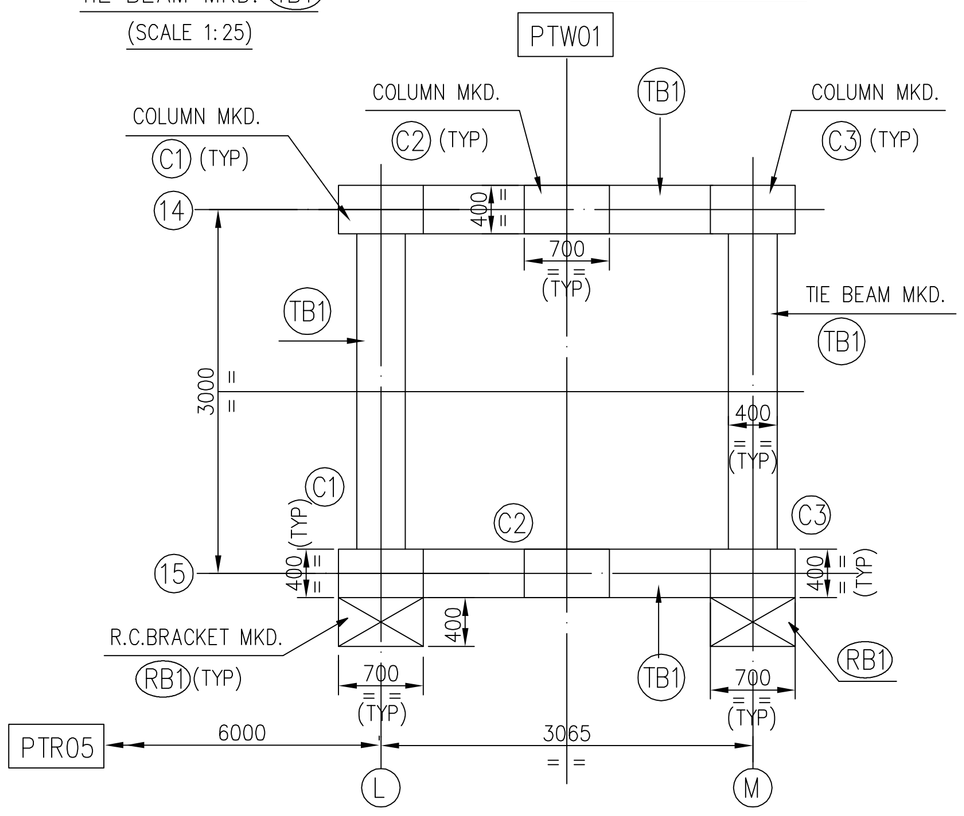

PART LAYOUT OF COLUMNS & TIE BEAMS

(REFER DRG.No.2-38142-01069)

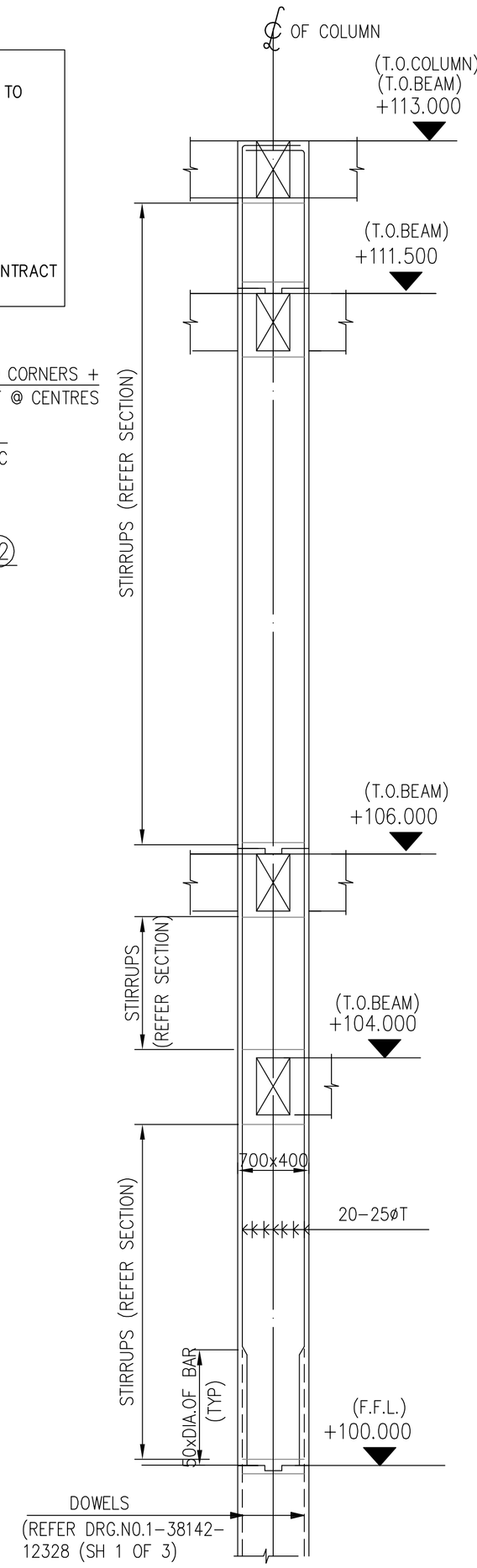

LONGITUDINAL SECTION OF COLUMN MKD. (C1)

(2 Nos. REQUIRED THUS)

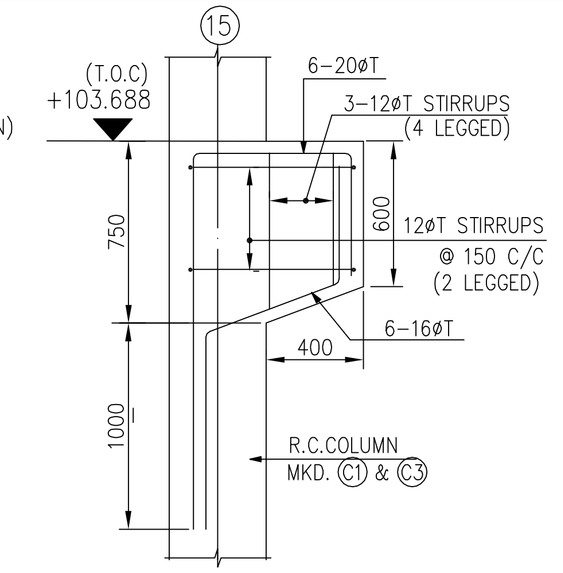

TYPICAL R.C. SECTION OF BRACKET MKD. (RB1)

(2 Nos. REQUIRED THUS)

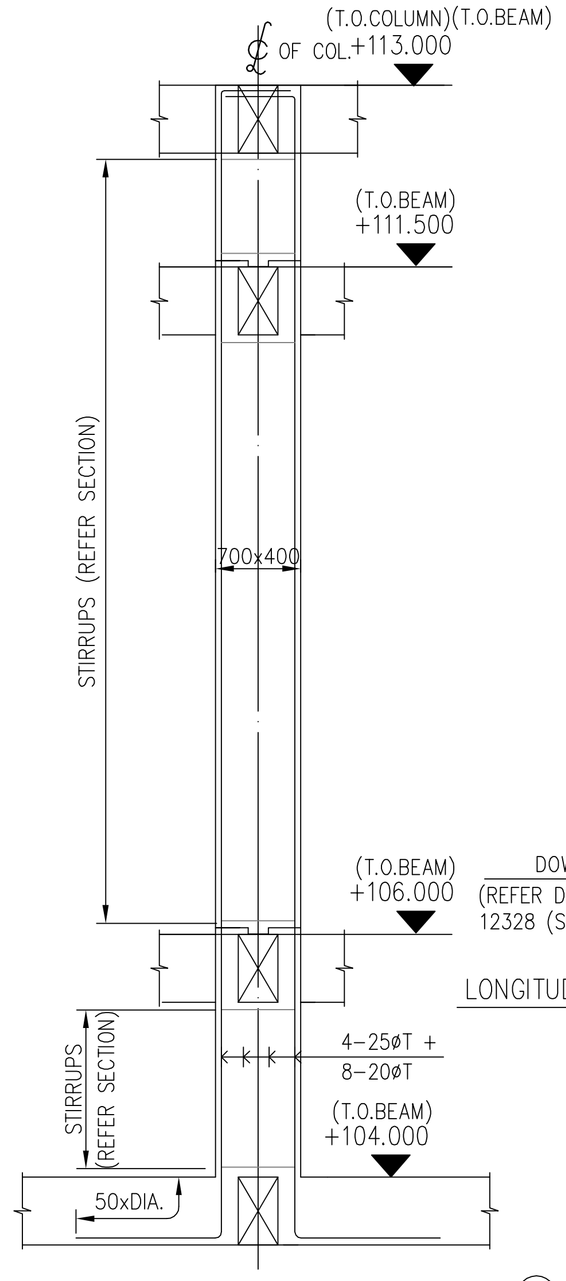

LONGITUDINAL SECTION OF COLUMN MKD. (C2)

(2 Nos. REQUIRED THUS)

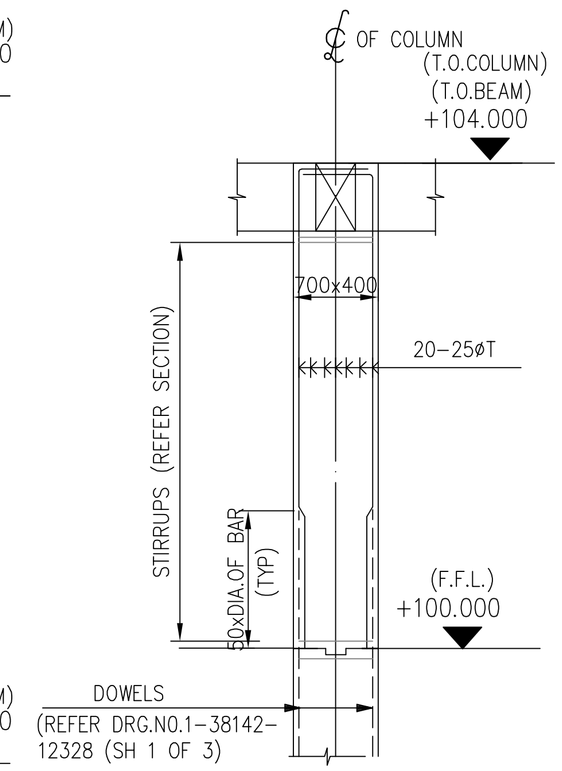

LONGITUDINAL SECTION OF COLUMN MKD. (C3)

(2 Nos. REQUIRED THUS)

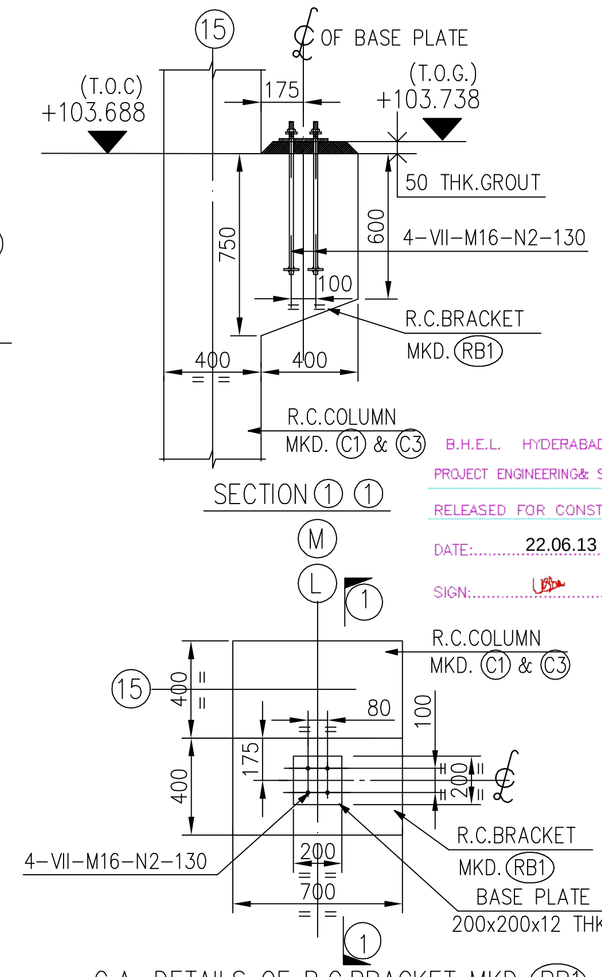

G.A. DETAILS OF R.C.BRACKET MKD. (RB1)

(SCALE 1:25)

(2 Nos. REQUIRED THUS)

REFERENCE DRAWINGS

ENGINEERING

0-381-01-05173 (SHEET 1 OF 3) - G.A OF PROPOSED PIPE RACK
0-381-01-05173 (SHEET 2 OF 3) - CROSS SECTION VIEW OF PROPOSED PIPE RACK
0-381-01-05173 (SHEET 3 OF 3) - CROSS SECTION VIEW OF PROPOSED PIPE RACK
27541-32-04-UTL-0022 - LOAD DETAIL FOR PIPE RACK (EL 108.00/113.00)
27541-32-04-UTL-0025 - LOAD DETAIL FOR PIPE RACK (EL 106.00/111.50)
1-3810105355-S01 - AREA 12-PIPING PLAN BETWEEN EP-12 & PTW-03

CONSTRUCTION

1-38142-12325 - OVER ALL LAYOUT OF PIPE RACK
1-38142-12326 - G.A OF PIPE RACK BETWEEN PTW01 TO PTW06 (SHEET 1 OF 3)
1-38142-12326 - G.A OF PIPE RACK BETWEEN PTW06 TO PTW10 (SHEET 2 OF 3)
1-38142-12326 - G.A OF PIPE RACK BETWEEN PTR21 TO PTR41 (SHEET 3 OF 3)
1-38142-12327 - PIPE RACK - LAYOUT OF PILES (PTW01 TO PTW06) (SHEET 1 OF 3)
1-38142-12327 - PIPE RACK - LAYOUT OF PILES (PTW-06 TO PTW-10) (SHEET 2 OF 3)
1-38142-12327 - PIPE RACK - LAYOUT OF PILES (PTR-21 TO PTR-41) (SHEET 3 OF 3)
1-38142-12328 - R.C OF PIPE RACK BETWEEN PTW06 TO PTW10 (2 SHEETS)
1-38142-12328 - R.C OF PIPE RACK BETWEEN PTR21 TO PTR41 (2 SHEETS)

B.H.E.L. HYDERABAD- 500032
PROJECT ENGINEERING& SYSTEM DIVISION
RELEASED FOR CONSTRUCTION
DATE: 22.06.13
SIGN:

PROJECT : CPP REVAMP PROJECT. KRIBHCO. SURAT

CUSTOMER : [redacted] KRISHAK BHARATI COOPERATIVE LTD. HAZIRA, SURAT

CONSULTANT : FICHTNER CONSULTING ENGINEERS (INDIA) PVT. LTD., NAVI MUMBAI

BHARAT HEAVY ELECTRICALS LTD. UNIT : HYDERABAD

	NAME	SIGN.	DATE	NO.OF VAR.
DRN.	BHELDRNBY		BHELDRNDT	N.A.
CHD.	BHELCHK		BHELCHKDT	
APPD.	BHELAPP		BHELAPPDT	

REV.	DATE	ALTERED CHD/APPD	REV.	DATE	ALTERED CHD/APPD	REV.	DATE	ALTERED CHD/APPD	REV.	DATE	ALTERED CHD/APPD	REV.	DATE	ALTERED CHD/APPD	REV.	DATE	ALTERED CHD/APPD
ZONE			ZONE			ZONE			ZONE			ZONE			ZONE		

BHEL'S CONSULTANT: M.N. DASTUR & COMPANY (P) LTD. CONSULTING ENGINEERS- KOLKATA

DASTURCO PROJECT NO : 27541

	NAME	SIGN.	DATE
DRN.	RB	RB	18.06.2013
CHD.	PRS	PRS	18.06.2013
APPD.	DK	DK	18.06.2013

DRG. NO. 27541-32-08-CVL-0117 REV. 00A

DEPT. PED | CODE 450 | UNTOL. DIMS. GR. g/M/f | SCALE 1:50 | WEIGHT (KG) N.A. | REF. TO ASSY. DRG. N.A. | ITEM NO. N.A. | NO.OF ITEMS N.A.

TITLE: PIPERACK FOR TOWER MKD.PTW-01 TO PTW-06 PART LAYOUT & R.C.DETAILS OF COLUMNS & TIE BEAMS

CARD CODE: NA

DRAWING NO. 2-38142-01082 REV. 00

SHT. No 1 NO. OF SHT. 1

THE INFORMATION ON THIS DOCUMENT IS THE PROPERTY OF BHARAT HEAVY ELECTRICALS LIMITED. IT MUST NOT BE USED DIRECTLY OR INDIRECTLY IN ANY WAY DETRIMENTAL TO THE INTEREST OF THE COMPANY

GENERAL DIMENSIONAL LIMITS,FITS & TOLERANCES AS PER HY0230261

COMPUTER FILE NAME | REF. DRG. NO. | SIGN. AND DATE | INVENTORY NO