BHARAT HEAVY ELECTRICALS LIMITED

(A Government of India Undertaking)
HIGH PRESSURE BOILER PLANT
PURCHASE DEPARTMENT - FOSSIL BOILERS
THIRUCHIRAPALLI - 620014
TAMILNADU (INDIA)

PHONE :2577629
GRAMS : BHARATELEC
FAX NO: 2520719
E-mail: srchandran@bheltry.co.in
Web:

429-002/A

Enquiry No	Enquiry Date	Due Date for Quotation
2661400815 - 75	07.11.2014	02.12.2014

Please quote Enquiry No, Date and due date in all correspondences.
This is only a request for quotation and not an order

Item	Description	Unit	Quantity	Delivery Schedule Quantity	Delivery Schedule Date
10	7610A3601000 WELDING HEAD NECK ASSEMBLY SPECIFICATION FOR WELDING HEAD NECK ASSEMBLY: WELDING HEAD NECK ASSAMBLY for standard model 516 orbital tig welding machine. WELDING HEAD NECK ASSLY consists of integral cooling input and out put lines for cooling the weld head and inbuilt with gas line in a single moulded assebly with rubber insulation and varnish coated to withstand high voltage and frequency.	NO	2.000	2.00	31.01.15
20	7610A3600800 WIRE FEED UNIT KIT SPECIFICATION FOR WIREFEED UNIT: The unit consist of Hand tightened knurled knob, swing out bracket,rollerbeam assembly, bevel gearset, wire feed drum, link arm.TheOperation and material composition of the above to be supplied as per our Enquiry.	NO	3.000	3.00	31.01.15
30	7610A3600600 WIRE GUIDE WIRE GUIDE FOR ORBITAL WELDING M/C WIRE GUIDE DIMENSIONS OUTER DIA - 3.3 OR 4MM INNER DIA - 1.2MM LENGTH - 3MTS. MATERIAL - PVC (COMPRESSED TYPE) WITHSTANDING TEMPERATURE - 200 DEGREE CENTIGRADE APPLICATION - 1MM	NO	5.000	5.00	31.01.15
40	7610A3600200 OCILLATION DRIVE ASSEMBLY SPECIFICATION FOR OSCILLATION DRIVE ASSEMBLY WITHOUT OSCILLATION MOTOR: Oscillation drive assembly consists of eccentric rotary	NO	4.000	4.00	31.01.15

The offers should reach us 30 minutes before the time of opening of tenders.
The offers will be opened at 14.30 hrs on the due date of tender in the presence of tenderers who have submitted their offer and who may like to be present for the tender opening.Late and delayed offers are liable to be rejected.

VIGILANCE AWARENESS WEEK
27 th OCT to 1st NOV 2014
FOR VIGILANCE RELATED COMPLAINTS,
CONTACT DGM/VIGILANCE
PHONE:0431-2577552,2577636

Yours faithfully,
For **BHARAT HEAVY ELECTRICALS LIMITED**

MANAGER / PURCHASE
(FOSSIL BOILERS)
Yours faithfully,

BHARAT HEAVY ELECTRICALS LIMITED

(A Government of India Undertaking)
HIGH PRESSURE BOILER PLANT
PURCHASE DEPARTMENT - FOSSIL BOILERS
THIRUCHIRAPALLI - 620014
TAMILNADU (INDIA)

PHONE :2577629
GRAMS : BHARATELEC
FAX NO: 2520719
E-mail: srchandran@bheltry.co.in
Web:

2661400815 / 07.11.2014

	bush with needle trust assembeld with cam of PTTF material.				
50	7610A3600700 ROLLER SPECIFICATION FOR ROLLER: Guide wheel with precision roller assembly for orbital welding machine. Roller is engaged in the guide ring for D-head rotation.	NO	4.000	4.00	31.01.15
60	7610A6203000 BEARING BLOCK WITH PIN ASSEMBLY BEARING BLOCK WITH PIN ASSEMBLY ALONG WITH PRECESION ROLLER SET AS PER DRG NO:M&S PD-12-133 MATERIAL FRP BLOCK WILL BE MOLDED PIECE WITH M3 INSERT INTEGRAL MOLDED AT 5.6mm PITCH WITH WIRE FEED HOLE 3.2mm AT ONE END. LENGHT OF THE BLOCK :27mm WIDTH OF THE BLOCK :8mm SIZE OF THE BEARING :6203ZZ MOLDED BLOCK SIZE OF THE PIN DIA 3 X 8 mm OF SS MATERIAL WITH TIGHT FIT.	NO	5.000	5.00	31.01.15
70	7610A3600300 WIRE FEEDING DISC SPECIFICATION FOR WIRE FEED DISC: Integerated moulded wire feeding disc suitable for 0.76mm Wire. Feed drum consists of VEE groove which drives the wire by friction.	NO	4.000	4.00	31.01.15
80	7610A3600900 SPROCKET SPECIFICATION FOR SPROCKET: Guide sprocket connected to tractor motor,engages the chain on the guide ring for traction.	NO	5.000	5.00	31.01.15

General Note:

1.POINT-BY-POINT CONFIRMATION TO BHEL'S SPECIFICATIONS, COMMERCIAL TERMS & CONDITIONS ARE TO BE PROVIDED BY THE VENDORS IN "ANNEXURE A &B

2. FILL UP ANNEXURE A. PLEASE ENSURE THAT ALL TERMS & CONDITIONS SHOULD BE INDICATED IN THE UN-PRICED BID TO BE ATTACHED WITH THE TECHNO-COMMERCIAL BID POSITIVELY.

The offers should reach us 30 minutes before the time of opening of tenders.
The offers will be opened at 14.30 hrs on the due date of tender in the presence of tenderers who have submitted their offer and who may like to be present for the tender opening.Late and delayed offers are liable to be rejected.

VIGILANCE AWARENESS WEEK
27 th OCT to 1st NOV 2014
FOR VIGILANCE RELATED COMPLAINTS,
CONTACT DGM/VIGILANCE
PHONE:0431-2577552,2577636

Yours faithfully,
For **BHARAT HEAVY ELECTRICALS LIMITED**

MANAGER / PURCHASE
(FOSSIL BOILERS)
Yours faithfully,

BHARAT HEAVY ELECTRICALS LIMITED

(A Government of India Undertaking)
HIGH PRESSURE BOILER PLANT
PURCHASE DEPARTMENT - FOSSIL BOILERS
THIRUCHIRAPALLI - 620014
TAMILNADU (INDIA)

PHONE :2577629
GRAMS : BHARATELEC
FAX NO: 2520719
E-mail: srchandran@bheltry.co.in
Web:

2661400815 / 07.11.2014

3. VALIDITY OF THE OFFER SHOULD NOT BE LESS THAN 120 DAYS.

4. THE ORDER WILL BE PLACED ON INDIVIDUAL ITEMWISE L1 BASIS

5. THE BIDDER SHALL MEET PRE-QUALIFICATION CRITERIA

6. WHEREVERE FOR SPLITTING OF ORDER AS PER ANNEXURE II CLAUSE 27,IF SPLITTED QUANTITY COMES OUT <1 ,THE SPLITTING OF ORDER WILL NOT BE FEASIBLE. (For MSE vendors)

LIST OF ATTACHMENTS:

1. ANNEXURE-II TERMS AND CONDITIONS OF THE ENQUIRY. (TWO PART-BID)

2. ANNEXURE-V- CA certificate format(as per MSMED act 2006) to be furnished , if applicable -Refer ANNEXURE II CLAUSE 27 (For MSE vendors)

3.ANNEXURE-A CHECK LIST FOR TECHNICAL & COMMERCIAL TERMS CONFIRMATION-TO BE FILLED BY THE SUPPLIER.
4. ANNEXURE-B MODEL PRICE BID FORMAT.
5. ANNEXURE-VI CHECK LIST TO BE SUBMITTED ALONG WITH OFFER
6. PREQUALIFICATION CRITERIA
7. DRAWING.

Enclosures:

"LD clause has to be confirmed without fail."

The offers should reach us 30 minutes before the time of opening of tenders.
The offers will be opened at 14.30 hrs on the due date of tender in the presence of tenderers who have submitted their offer and who may like to be present for the tender opening.Late and delayed offers are liable to be rejected.

VIGILANCE AWARENESS WEEK
27 th OCT to 1st NOV 2014
FOR VIGILANCE RELATED COMPLAINTS,
CONTACT DGM/VIGILANCE
PHONE:0431-2577552,2577636

Yours faithfully,
For BHARAT HEAVY ELECTRICALS LIMITED

MANAGER / PURCHASE
(FOSSIL BOILERS)
Yours faithfully,

CAUTION: THIS DRAWING IS OUR SOLE PROPERTY AND SHOULD NOT BE USED IN ANY FORM FOR ANY PURPOSE WITHOUT THE WRITTEN PERMISSION OF BHARAT HEAVY ELECTRICALS LIMITED TRICHIRAPPALLI - 620 014.

ALL DIMENSIONS ARE IN MM

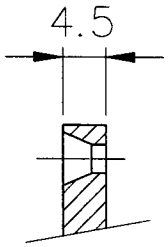

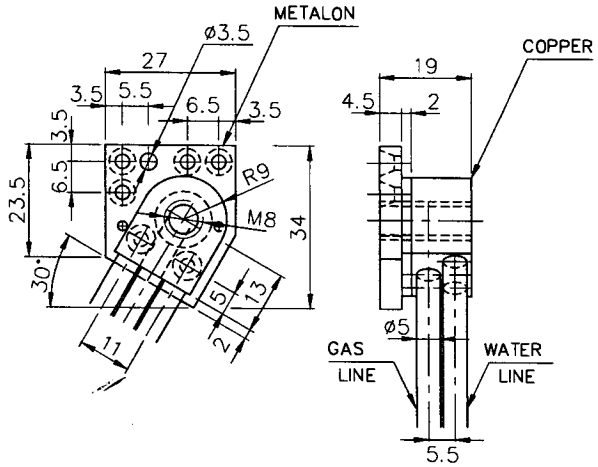

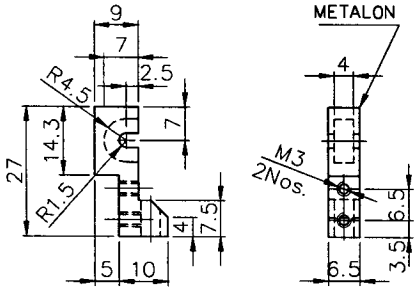

SCALE 1:10	DRAWN	G.G.R	MATL:	Fe410WA IS: 2062	
	DATE	26/07/12			
	M/C. : ORBITAL TIC WELDING			TYPE : MAGNANOTECH	
	TITLE: WELD HEAD (ELEC/M&S/UNIT-II/BLDG.107)			DRAWING No: M&S: PD: 12: 133	

PRE - QUALIFICATION CRITERIA

The bidder has to compulsorily meet the following requirement and supporting document should be furnished without which the offer will not be considered for technical evaluation.

S. No.	Requirements	Vendors Response
1	The BIDDER(s) / VENDOR(s) shall have a minimum three years of Experience in the field	Vendor to specify
2	BIDDERS should submit previous purchase order copy for supplying similar kind of machining items	Vendor to specify
3	Compant profile details has to be provided along with offer	Vendor to specify
4	After placement of Purchase order 1 No of Sample in each items shall be supplied preferably within 2 weeks to BHEL acceptance. After getting acceptance from BHEL full quantity may be supplied. Acceptance from BHEL will be given within 1 week.This period (2+1=3 weeks)taken into account while quoting delivery period by the supplier	Vendor to confirm
5	Supplier shall visit BHEL -trichy to understand the enquiry requirement before quoting.	Vendor to note

REF: BHEL/ELE/266/75 **BHARAT HEAVY ELECTRICALS LIMITED** **AnnexureII**

(A GOVT.OF INDIA UNDERTAKING)

HIGH PRESSURE BOILER PLANT

TIRUCHIRAPPALLI-620 014

TERMS AND CONDITIONS OF THE ENQUIRY (TWO PART BID)

1. The tender will be operated on two part bid basis i.e. (I).Techno-Commercial Bid & (II).Price Bid.

2. Techno-Commercial Bid: Containing Technical details, specifications, commercial terms and conditions like percentage of Freight & Insurance, ED WITH CESS, Taxes ,delivery terms, delivery schedule, validity of offer, payment terms (except price details), acceptance for LD clause, RP clause etc. as per **ANNEXURE-A** shall be put in a cover (1) and super scribed as "Techno-Commercial Bid" for Enquiry No: .....Dt: .....Due Dt.: .....

3. Price Bid: Containing the price details shall be put in a separate cover (2) and superscripted as "Price Bid" for Enquiry No: .....Dt.: .....Due Dt.: ..... as per **ANNEXURE –B** (submitted in your company letter head)

4. You are requested to put the above two envelopes (Techno-Commercial Bid & Price Bid) inside a separate larger sealed envelope and this envelope shall be super scribed as "Techno-Commercial Bid and Price Bid" for Enquiry No: .....Dt.: .....Due Dt.: .....

Your Quotations should be sent to:
The Manager,
Purchase Department // CP&SP /266/75
Section- Materials Management / Raw Materials,
24 Building (4th Floor),
Bharat Heavy Electricals Limited,
Tiruchirappalli - 620 014.

5. Tender should not be addressed to any individual's name but only by designation.

6. Tenders should be free from CORRECTION AND ERASURES. Corrections if any must be attested; all amounts shall be indicated both in words as well as in figures. Where there is difference between amount quoted in words and figures, amount quoted in words shall only be considered.

7. Please submit point wise compliance to our specifications, terms and conditions. Otherwise it will be presumed that you are accepting BHEL's terms and conditions. Fill Up Annexure A. Please Ensure That All Terms & Conditions Should Be Indicated in The Un-Priced Bid To Be Attached With The Techno-Commercial Bid Positively(ANNEXURE-A)

8. Offer/s received after due date and time: **02:00 pm** will not be considered under any circumstances.

9. **Validity** of quoted rates should be maintained minimum for **120 days** from the date of Tender opening for ordering (Technical Bid). The quoted/Finalized rates shall be Firm till completion of the supplies.

10. The rates are to be quoted **on F.O.R. destpatching station basis (Inclusive of Packing, Forwarding) and separately Freight & Transit Insurance charges which are payable to supplier**. All the items should be supplied at our stores, BHEL / TRICHY-14 at your own cost. Offers with any other delivery conditions is not acceptable .

IMPORTANT NOTE: (I) Delivery condition like Ex-works / Ex-godown / Transportation of materials through transport carriers from your works up to the transport carrier's office at Tiruchy and taking delivery of goods by BHEL from such office of transport carriers is not acceptable to us)

11. **Payment Terms (Indigenous)**
Payment term is 100% direct payment after 45 days from the date of receipt and acceptance of materials.

Any deviation in the above payment term will attract loading as mentioned below.
"Base rate of SBI (as applicable on the date of bid opening. Techno-commercial bid opening in case of two part bids) + 6% shall be considered for loading for the period of relaxation sought by bidders.

Payment through Bank is not preferred. In case of Payment through Bank is opted by Supplier, BHEL prefers documents submission through bank with copy of LR and door delivery of Goods to Site/Stores with Consignee copy attached. In this case Loading will be 3% on the offered value.
Offers of indigenous Suppliers with payment terms as LC/Advance Payment are liable for rejection.

Payment term for supply portion(For import supplies)
BHEL Payment term is 100% payment on CAD basis after 45 days from the date of receipt of documents, specified in PO, at BHEL bank. Respective bank charges to respective account.

Any deviation in the above payment term will attract loading as mentioned below.
"Base rate of SBI (as applicable on the date of bid opening. Techno-commercial bid opening in case of two part bids) + 6% shall be considered for loading for the period of relaxation sought by bidders.

In the case of Usance LCs the loading will be considered @ 1.5% on the offered Value.
For LC at sight the loading will be considered @ 3.5% on the offered Value.
Normally CAD at sight and Confirmed LCs are liable for rejection.

Payment terms for Indian agent:
Indian Agency Commission ,if any, shall be clearly specified in the offer and the same will be paid in Indian Rupees against acceptance of the materials

12. **Liquidated Damages / Penalty**:-
Liquidated damages shall be 0.5% of the total order value per week or part thereof subject to a maximum of 10% of the total order value.

For staggered delivery schedule, LD shall be 0.5% of the undelivered portion per week of the delay or part there of subject to a maximum of 10% of the total order value.

Any deviation from the above LD clause, loading will be applied to the extent to which it is not agreed by the bidder (at offered value).

13. If Guarantee / Warranty period is applicable as per tender specification, No deviation permitted and deviated

offers are liable for rejection.

14. IMPORTANT NOTE: **BHEL WILL CONSIDER THE RANKING AFTER THE LOADING IS APPLIED AS REFFERED ABOVE WHEREVER DEVIATIONS ARE OBSERVED.**

15. No revision of prices will be entertained at any circumstances after tenders are opened.

16. If any sales tax is payable as extra to the quoted price it should be specifically stated in quotations along with CST & VAT Number failing which the purchaser will not be liable for payment of sales tax. Our TIN 33243560005 dt.01.01.2007 & CST no 239383 DT, 11.06.1991

17. On the due date of tender opening, only the technical bids will be opened. Technical bids will be evaluated by us and clarifications required, if any, will be called for from the bidders on technical and commercial points. The price bids of techno-commercially suitable bidders will be opened at a later date with prior intimation to respective suitable bidders.

18. Ranking L-1, L-2 etc. shall be done generally on each individual items for the techno-commercially acceptable offers on landed cost to BHEL, Trichy basis and BHEL reserves the right to place order for individual items with different vendors. At special circumstance ranking shall be done on compatible basis which will be indicated through Enquiry special instruction General Notes.

19. BHEL reserves the right to increase or decrease the tender quantity and split up the tender quantity among more than one vendor at the lowest acceptable price to BHEL and place order accordingly in any proportion at our own discretion.

20. Lowest price received against BHEL tenders need not be the technically acceptable one and in that case BHEL reserves the right not to consider the same. The purchaser shall be under no obligation to accept the lowest or any other tender and shall be entitled to accept or reject any tender in part or full without assigning any reason whatsoever.

21. BHEL reserves the right to negotiate or refloat the tender opened, if L1 price is not the lowest acceptable price to BHEL due to inter-alia other reasons.

22. PACKING AND MARKING: The supplier shall arrange for securely protecting and packing the stores to avoid loss or damages during transit.

23. **RISK PURCHASE**: Alternatively the purchaser at his option will be entitled to terminate the contract and to purchase elsewhere at the risk and cost of the seller either the whole of the goods or any part which the previous supplier has failed to deliver or dispatch within the time stipulated as aforesaid or if the same were not available, the best and the nearest available substitutes therefore. The new supplier shall be liable for any loss, which the purchaser may sustain by reason of such risk purchases in addition to penalty at the rate mentioned in our LD clause.

24. PREFERENTIAL DELIVERY:(Applicable in the case of BHEL's Enquiry specifies Preferential Delivery in the Special Instructions) It should be noted if a contract is placed on a higher tendered as a result of this invitation to tender in preference to the lowest acceptable offer in consideration of the earlier delivery, the seller will be liable to pay to the purchaser the difference between the contract rate and that of the lowest acceptable tender on the basis of final price F.O.R destination, including all elements of freights, Sales tax, duties and other incidents, incidental in case of failure to complete supplies in terms of such contract within the date of delivery specified in the tender and incorporated in the contract, such difference amount in addition to penalty at the rate mentioned in our LD clause.

25. CENVAT CREDIT: If any Excise Duty is payable, the Chapter Head / Sub -head reference and the rate of the duty should be quoted. If the Tenderer is availing CENVAT credit for this input material, the effect of Performa credit should be passed on to the purchaser. Tenderer under "CENVAT" shall be preferred.

26. Any other conditions which might have been quoted by the seller and are in contravention to the terms prescribed in the order and which have not been specifically accepted by purchaser in written will not be applicable to the contract.

27. The bidder may also be a Micro and Small Enterprises (MSE) vendor registered as per MSE act. As per the public procurement policy notified by the Central government,

20% of the tendered quantity is earmarked for MSE suppliers in this tender.
Out of the 20% tendered quantity reserved for MSE suppliers, 4% shall be earmarked for procurement from MSE owned by SC / ST entrepreneurs.
In case MSE vendor participating in the tender quotes within the price band of L1 + 15%, they will be allowed to supply the portion of the requirement subject to acceptance of L1 price by MSE vendor. In case of more than one such MSE, the supply shall be shared proportionately.

"MSE suppliers can avail the intended benefits only if they submit along with the offer, attested copies of either EM II certificate having deemed validity (five years from the date of issue of acknowledgement in EM, II) or valid NSIC certificate or EM II certificate along with attested copy of a CA certificate (Format enclosed at Annexure -V where deemed validity of EM II certificate of five years has expired) applicable for the relevant financial year (latest audited). Date to be reckoned for determining the deemed validity will be the date of bid opening (Part **1** in case of two part bid). Non submission of such documents will lead to consideration of their bid at par with other bidders. No benefit shall be applicable for this enquiry if any deficiency in the above required documents are not submitted before price bid opening. **Documents should be notarized or attested by a Gazetted officer.** "

28. For verification of data submitted towards evaluation of bidder's capability, BHEL may decide to visit the bidder(s) works. Any fact found deviating from submitted data shall make the bidder liable to be disqualified.

29. In the event of more than one vendor becoming L1 for any of the item / items, the enquiry quantity for those item / items will be shared equally among all the L1 vendors.

30. The correspondence between the bidder and BHEL through email is considered as valid document Legally though not signed. It is treated as valid confirmations made on behalf of the respective company and comes under the legal ambit of the business transaction and hence binding on both the parties.

31. Equipment will be inspected and proved at vendor's works prior to dispatch, if applicable as per tender condition. However final inspection and acceptance of equipment will be after installation at BHEL, Trichy.

32. Erection / commissioning charges , if applicable as per tender condition will be clearly mentioned in the offer or else confirmation that Erection / commissioning shall be done at free of cost is available in the offer.
33.Price shall be quoted item wise.

34. Any warranty replacement during warranty period shall be supplied free of charge on FOR BHEL, TIRUCHIRAPALLI basis

35. The vendor shall provide necessary drawings, Test Certificates and Operating Maintenance Manuals etc., as called for in the Technical Specification, in the required number of copies at no extra cost.

36. Part Shipment or Transhipment is not permissible.(For import supplies)

37. In case of any short shipment in the main equipment / spares, where separate rates are not available in the contract, the customs duty levied on such supplies, shall be borne by the supplier / Indian agent.(For import supplies)

38. Indicate Nearest airport & sea port, Country of Origin .(For import supplies)
39. Vendors Meeting Our Pre-Qualification Criteria & Technical Specification Will Be Essential For Consideration Of Offer.

40. For The Vendor Willing To Participate In Tender Opening, The Representative Should Have Valid Company ID Proof & Authorization Letter From The Concerned Firm Who Has Submitted The Offer.

41. After Technical Scrutinisation Of The Offers, Price Bid Of Only Technically Qualified Vendors Will Be Opened With Prior Intimation.
42. If The Due Date Of Tender Opening Happens to be a Holiday, Those Tenders Will Be Opened On Next Working Days

43.For any clarification you can contact to srchandran@bheltry.co.in, pgavictor@bheltry.co.in, rravic@bheltry.co.in
44. This Tender Is Hosted Both In Bhel Website And In NIC, PSU Portal And Any Corrigendum May Pl Be Viewed in
BHEL's website http://www.bhel.com (Tender Notification page)
Govt. Tender website http://tenders.gov.in (Public sector units > Bharat Heavy Electricals Limited Page)
45. If we receive offer from both Manufacturer and Agent / Dealer or any other, the offer of Manufacturer only will be considered.

Certificate by Chartered Accountant on letter head

This is to Certify that M/S .....

(hereinafter referred to as 'company') having its registered office at

..... is registered under MSMED Act 2006, (Entrepreneur

Memorandum No (Part—II) ..... dtd•.....

Category: .....(Micro/Small)). (Copy enclosed).

Further verified from the Books of Accounts that the investment of the company as per the

latest audited financial year ..... as per MSMED Act 2006 is as follows:

1. **For Manufacturing Enterprises:** Investment in plant and machinery (i.e. original cost excluding land and building and the items specified by the Ministry of Small Scale Industries vide its notification No,S.0.1722(E) dated October 5, 2006 :
   Rs..... ....Lacs
2. **For Service Enterprises:** Investment in equipment (original cost excluding land and building and furniture, fittings and other items not directly related to the service rendered or as may be notified under the MSMED Act, 2006:
   Rs... ....Lacs

(Strike off whichever is not applicable)

The above investment of Rs ....Lacs is within permissible limit of

Rs. .....Lacs for .....Micro / Small **(Strike off which Is not applicable)**

Category under MSMED Act 2006.

Or

The company has been graduated from its original category (Micro/ Small) **(Strike off which is not applicable)** and the date of graduation of such enterprise from its original category is .....
(dd/mm/yyyy) which is within the period of 3 years from the date of graduation of such enterprise from its original category as notified vide S.O. No. 3322(E) dated 01.11.2013 published in the gazette notification dated 04.11.2013 by Ministry of MSME.

Date:

(Signature)

Name -

Membership number –

Seal of charted accountant

ANNEXURE –A (CHECK LIST FOR TECHNICAL & COMMERCIAL TERMS CONFIRMATIONS)

(a).TECHNICAL TERMS CONFIRMATION: AGAINST ALL ENQ SL NOS. (SUBMITTED IN COVER NO: 1)

ENQ SL NO	BHEL SPECIFICATIONS	VENDOR'S SPECIFICATION	unit	Quantity	Consginment weight against each item separetly	whether quoted/ not quoted
10						
20						
30						

(b).COMMERCIAL TERMS CONFIRMATION REQUIRED FROM SUPPLIERS (SUBMITTED IN COVER NO: 1)

SL NO	DESCRIPTION	BHEL REQUIREMENTS	SUPPLIER CONFIRMATION
1	VALIDITY	MINIMUM 120 Days from Date of tender opening	
2	PRICE QUOTED	FOR BHEL TRICHY STORES INCLUSIVE OF PACKING & FORWARDING CHARGES.	
3	EXCISE DUTY WITH CESS **(Whether inclusive (or) extra)** Clearly mention the percentage	SUPPLIER TO QUOTE	
4	VAT % Clearly mention the percentage	SUPPLIER TO QUOTE	
5	CST % against form 'C' Clearly mention the percentage	SUPPLIER TO QUOTE	
6	FREIGHT & INSURANCE CHARGES FOR DELIVERY AT BHEL / TRICHY STORES	SUPPLIER TO QUOTE **IN % ONLY**	
7	DEIVERY SCHEDULE FROM THE DATE OF PURCHASE ORDER / LETTER OF INTENT	SUPPLIER TO QUOTE IN NO. OF **DAYS/ WEEKS**	
8	PAYMENT TERMS	As per **Clause 11** of Terms and Conditions of the Enquiry (Two Part Bid)	
9	LIQUIDATED DAMAGES CLAUSE	As per **Clause 12** of Terms and Conditions of the Enquiry (Two Part Bid)	
10	RISK PURCHASE CLAUSE	As per **Clause 23** of Terms and Conditions of the Enquiry (Two Part Bid)	
11	GUARANTEE / WARRANTY	AS PER TENDER CONDITION	
12	ERECTION / COMMISSIONING	AS PER TENDER CONDITION	
13.	Origin of dispatch	SUPPLIER TO QUOTE	
14.	Nearest airport & sea port (For import supplies)	SUPPLIER TO QUOTE	
15.	Country of Origin (For import supplies)	SUPPLIER TO QUOTE	
16	CONTACT PERSON DETAILS	NAME:	
		MOBILE NO:	
		LAND LINE NO:	
		EMAIL :	
		FAX:	

NOTE: a). -It is confirmed that all the terms and conditions stipulated in the Enquiry have been fully understood by us and all clarifications & details have been obtained.

b)Your specific acceptance to our Payment terms,LD & Risk Purchase Clause are essential for consideration of your offer.

c).No row shall be left blank. Please indicate NA, in case the item is "not applicable"

Full postal Address:

Signature & Office Seal of the vendor

ANNEXURE –B (MODEL PRICE BID FORMAT)

ENQ SL NO	BHEL SPECIFICATIONS	VENDOR'S SPECIFICATION	unit	quantity	Rate in Rs.	**Value in Rs.**
10						
20						
30						

PRICE BID FORMAT OF ALL QUOTED ITEMS, IF ANY ITEM YOUR ARE NOT QUOTED SIMPLY YOU SHOULD MENTION AS "NOT QUOTED" AGAINST THAT ENQ SL NO. (SUBMITTED IN SEPARATE COVER NO: 2)

Annexure-VI

CHECK LIST TO BE SUBMITTED ALONG WITH OFFER

SL NO	Documents submitted	Vendor's Confirmation **Yes/No**
01.	Offer Submitted in 2 part bid system i.e. (I).Techno-Commercial Bid & (II).Price Bid inside a separate larger sealed envelope and this envelope shall be super scribed as "Techno-Commercial Bid and Price Bid" for Enquiry No: .....Dt.: .....Due Dt.:	
02.	Annexure-A part-**(a).TECHNICAL TERMS CONFIRMATION &** part **(b).COMMERCIAL TERMS CONFIRMATION** to be **SUBMITTED** ALONGWITH **IN COVER NO: 1**	
03.	Annexure-B- Price Bid to be **SUBMITTED IN SEPARATE COVER NO: 2**	
04.	For MSE vendors whether documents (**Documents should be notarized or attested by a Gazetted officer which is essential for consideration of MSE certificate. ")** a. Valid NS1C Certificate or b. Entrepreneurs Memorandum part II (**EM II**) certificate (valid based on deemed validity of 5 years) or, c. EM II certificate along with attested copy of CA certificate (as per prescribed format at annexure V) applicable for the relevant financial year (latest audited), where the deemed validity of EM II is over. submitted as per Annexure-II SL.no.**27**	
05	For MSE vendors where the deemed validity of EM II is over, whether EM II certificate along with attested copy of CA certificate submitted (as per prescribed format at annexure V) applicable for the relevant financial year (latest audited) (**Documents should be notarized or attested by a Gazetted officer which is essential for consideration of MSE certificate. ")**	
06.	Pre-Qualification Criteria fulfilled& documents Submitted	
07.	Documents/technical catalouges /DRAWINGS, (wherever as applicable) submitted as per tender condition	
08.	point to point confirmation provided as per tender condition	