FIRST ANGLE PROJECTION

(ALL DIMENSIONS ARE IN mm)

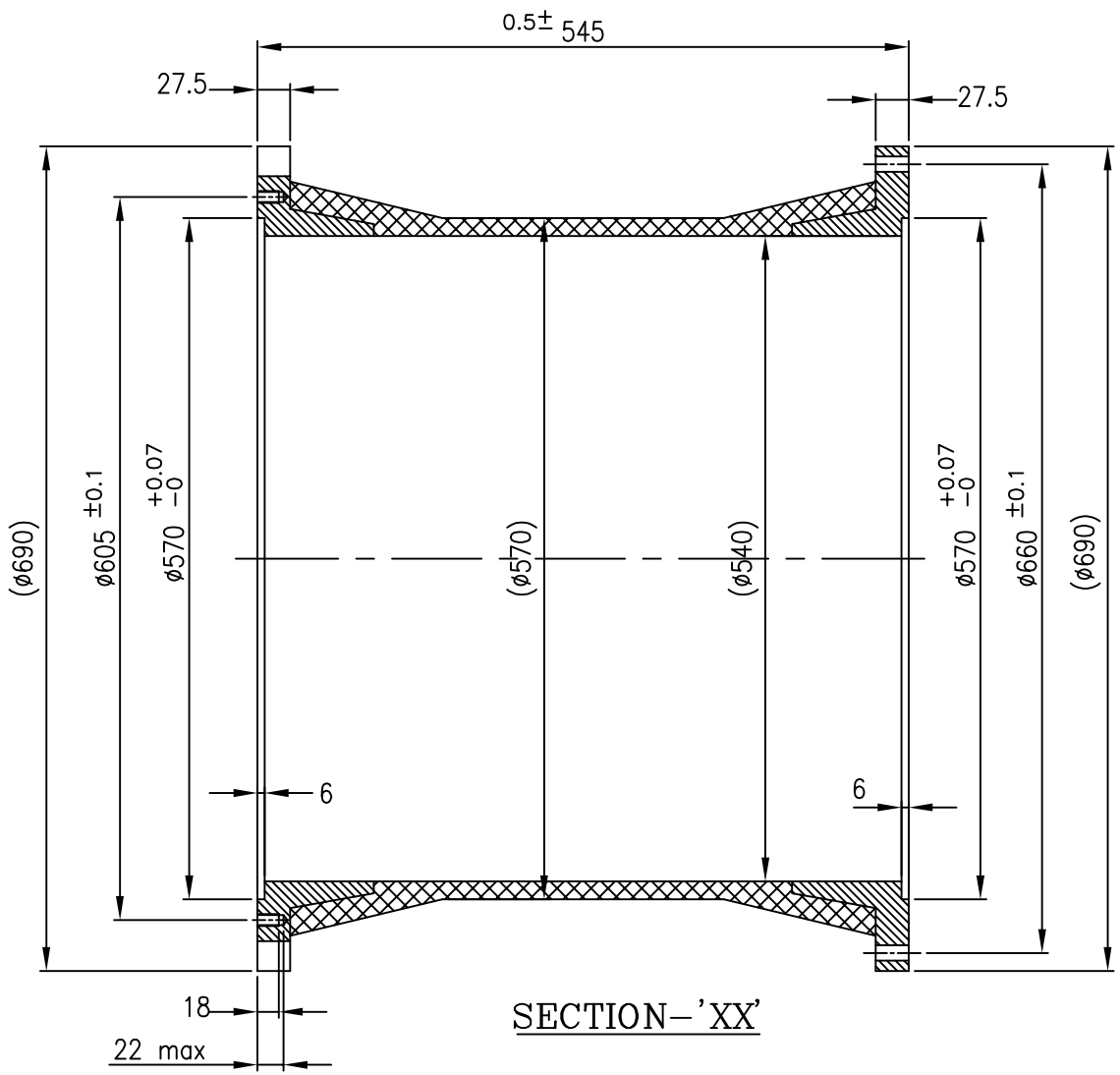

SECTION–'XX'

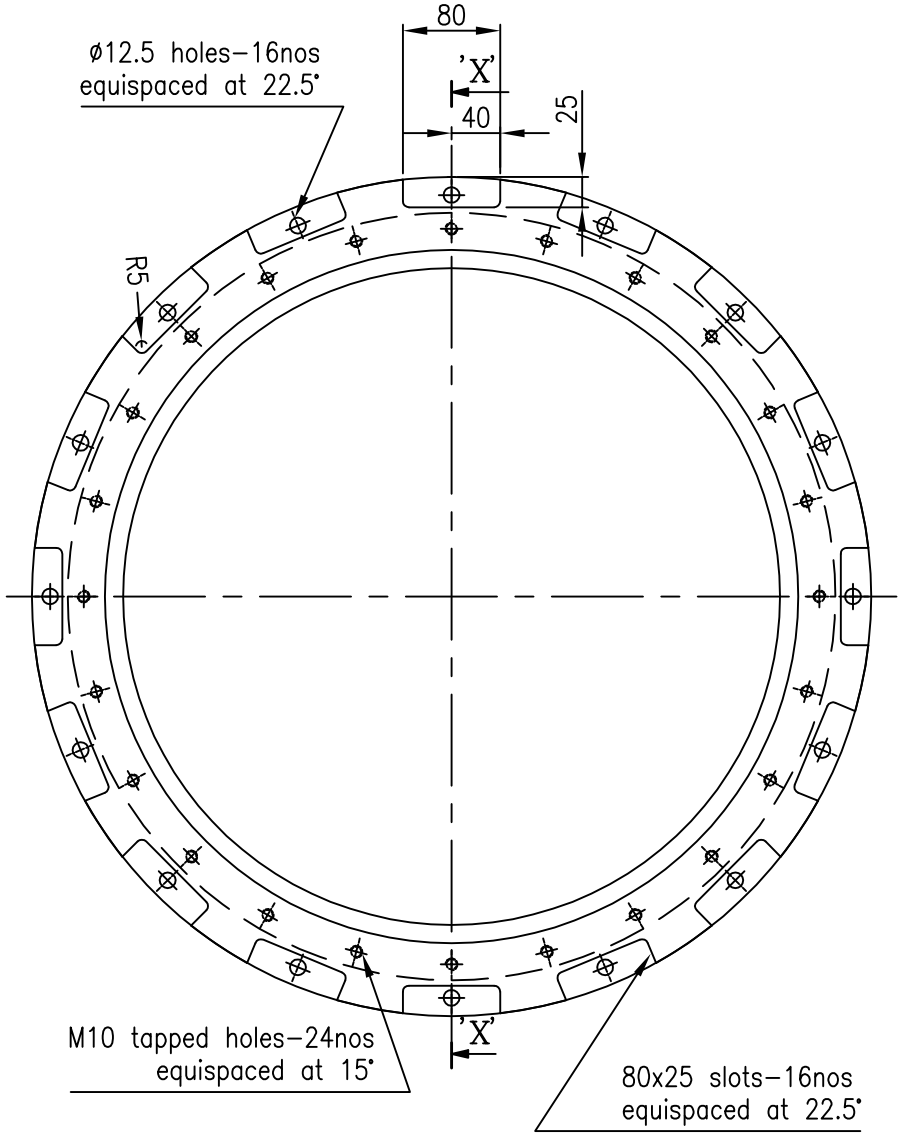

THE INFORMATION ON THIS DOCUMENT IS THE PROPERTY OF BHARAT HEAVY ELECTRICALS LIMITED.
IT MUST NOT BE REPRODUCED OR DISCLOSED TO ANY THIRD PARTY OR DISPOSED OF WITHOUT THE WRITTEN CONSENT OF THE COMPANY

TYPE OF PRODUCT OR NAME OF CUSTOMER/PROJECT	200kW HTSC MOTOR		
BHARAT HEAVY ELECTRICALS LIMITED Corp. R&D Division, Visakhapatnam HYDERABAD - 500 093	DRN. T.RAMESH	DATE 05.06.12	NO.OF VAR.
DEPT. EMC	SCALE NTS	WEIGHT (KG)	REF. TO ASSY DRG.
CODE 29			ITEM NO. / NO.OF ITEMS
TITLE MODIFIED TORQUE TUBE	DRAWING NO. XYI102090062	REV. 00	
	SHEET NO. 1	NO OF SHEETS 1	

REV.	DATE	ALTERED	CHECKED	APPD.	ZONE