| REV | DATE | ALTERED | REV | DATE | ALTERED | ADDITIONAL INFORMATION | 04947A03001 |
|---|---|---|---|---|---|---|---|
| | | CHECKED | | | CHECKED | STATUS OF DRAWING | U |
| | | APPROVED | | | APPROVED | DISTRIBUTION OF PRINTS | D/C-1, TRP-1, BAY 6&7-2 BAY 3,4&5-2, BAY 9-4 |

THE INFORMATION ON THIS DOCUMENT IS THE PROPERTY OF BHARAT HEAVY ELECTRICALS LIMITED.
IT MUST NOT BE USED DIRECTLY OR INDIRECTLY IN ANY WAY DETRIMENTAL TO THE INTEREST OF THE COMPANY.

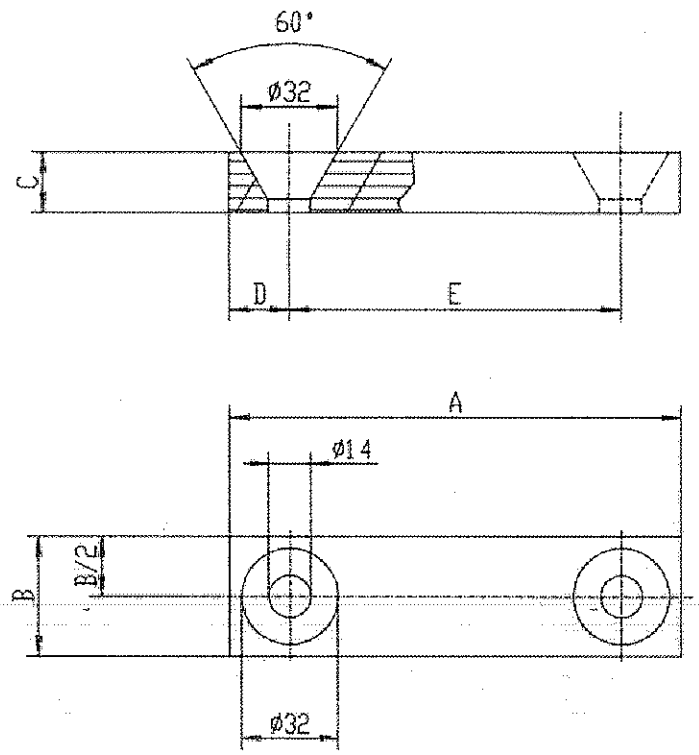


1

| IT. | A | B | C | D | E |
|---|---|---|---|---|---|
| 1 | 150 | 40 | 20 | 20 | 110 |
| | | | | | |

| QTY. | REMARKS/ DRG.NO. | ITEM NO. | DESCRIPTION | STD. | MATL. CODE / MATL. SPECN. | A/C | UNIT | UNIT WT. / QTY. |
|---|---|---|---|---|---|---|---|---|
| 001 | TO DETAIL | 1 | BRIDE PERMA WOOD C TK x B x A LG. | | AA 2201701059 / AA 22001 | | | 000,080 |

REF. DRG. NO. FRT40173.DWG

SIGN & DATE

| | NAME | SIGN | DATE | NO. OF VAR. |
|---|---|---|---|---|
| DRN. | RAMESH KUMAR | | 08.01.99 | |
| CKD. | S.P.GUPTA | | | |
| APPD. | | | 8/1 | |

BHARAT HEAVY ELECTRICALS LTD.
JHANSI

| DEPT. | UNTOL. DIMS. GR. | SCALE | WEIGHT (KG) | REF. TO ASSY. DRG. | ITEM NO. | NO. OF ITEM |
|---|---|---|---|---|---|---|
| TRE / CODE 406 | | NTS | | | | |

INVENTORY NO.

TRE REF. DRG. HSTN 423929

TITLE: BRIDE

DRAWING NO. 4466665002 REV. 00

SHT.NO. 01 NO. OF SHT. 01