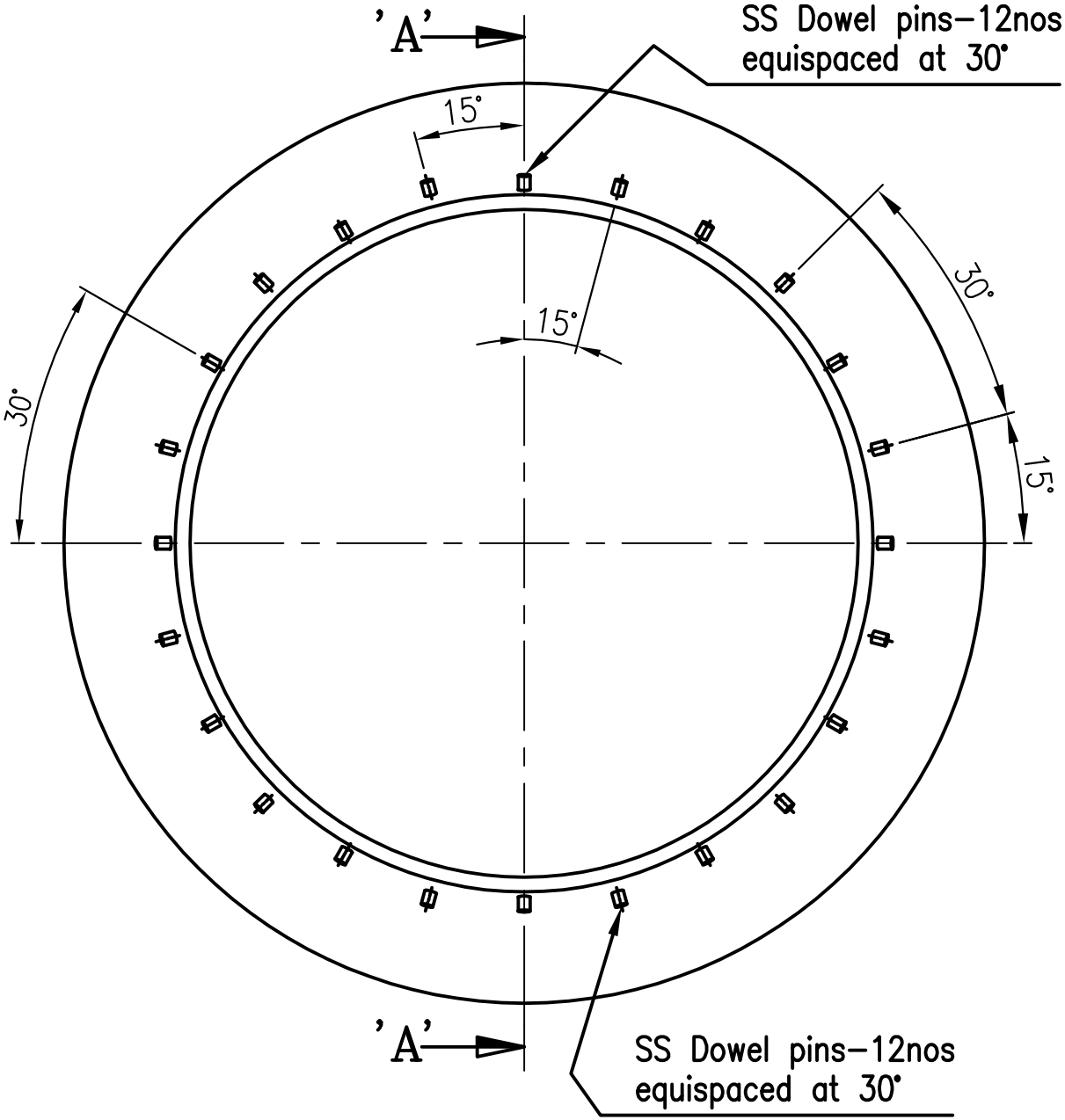

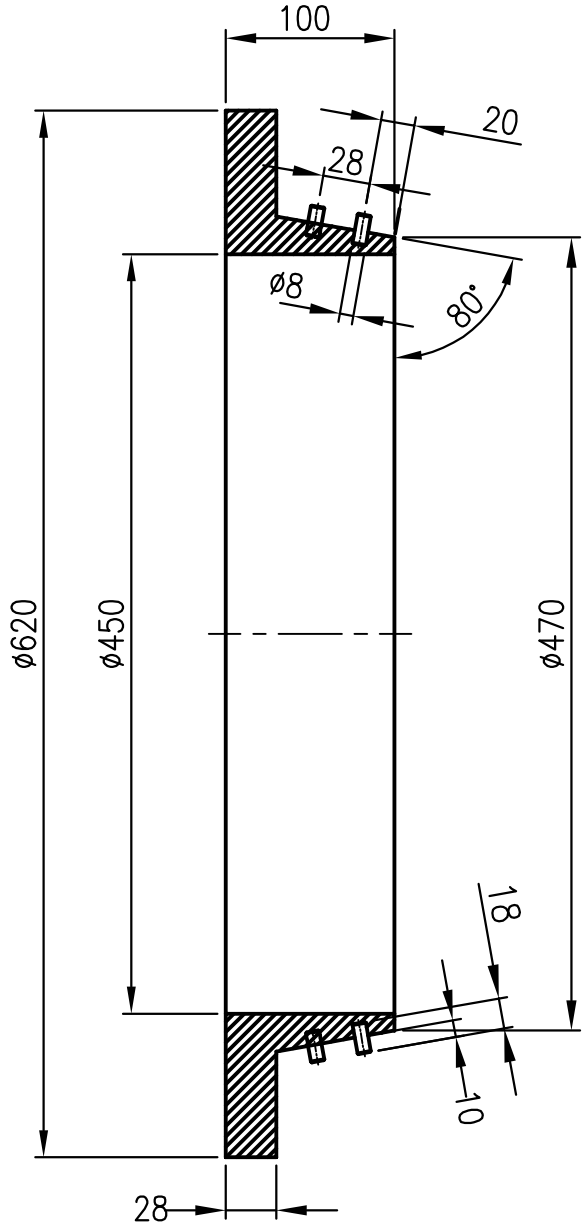

SECTION–'AA'

Note:

1. SS dowels should be fitted tightly and tack welded at one place
2. Remove all sharp corners
3. General tolerance:+/–0.1

Material: SS316L

BHARAT HEAVY ELECTRICALS LIMITED
Corp. R&D Division, Vikasnagar
HYDERABAD - 500 093

TORQUE TUBE
END FLANGE

07H46000001