DRG. NO. RD DG 4 35 0619 6112

FIRST ANGLE PROJECTION

(ALL DIMENSIONS ARE IN mm)

(~3.2)

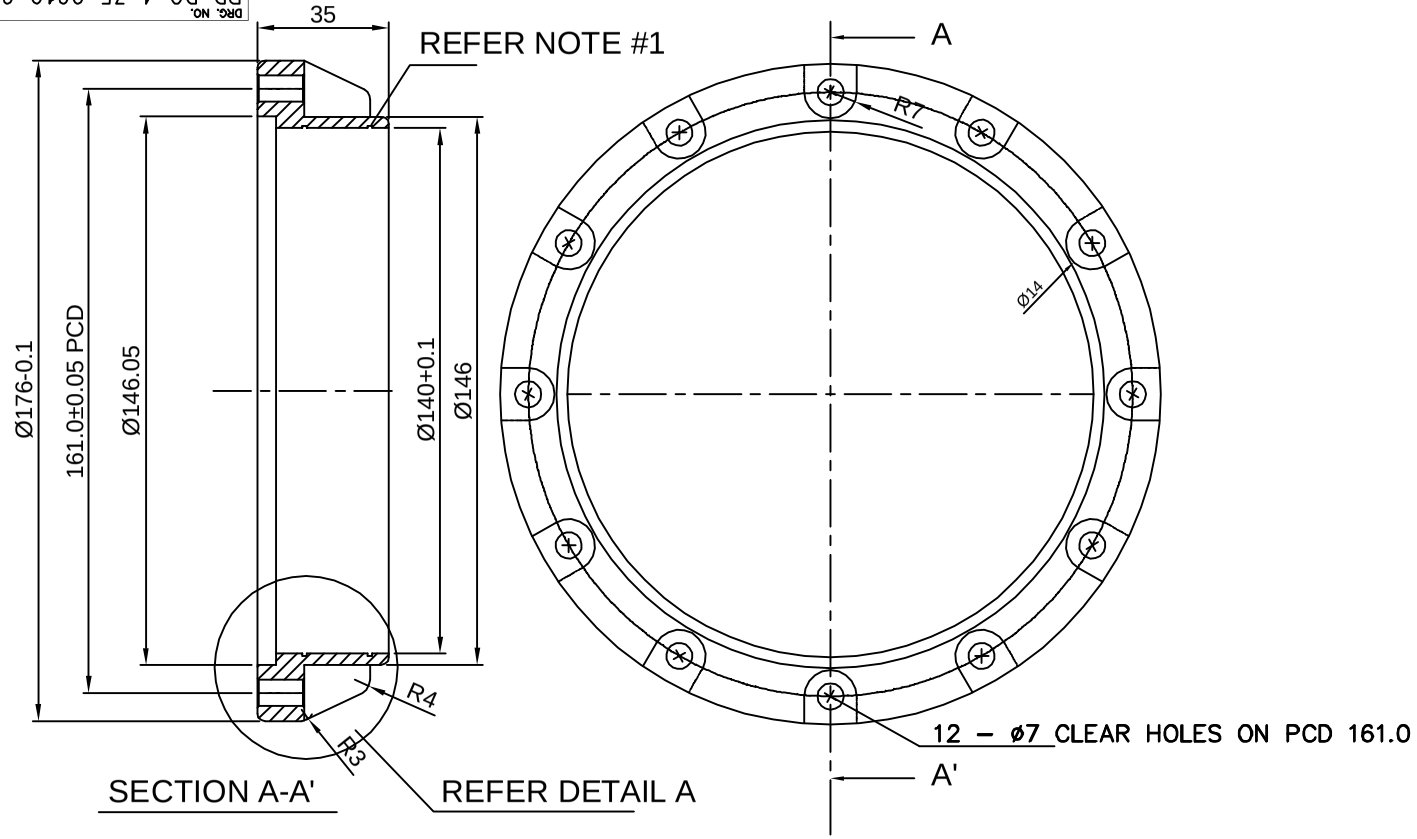

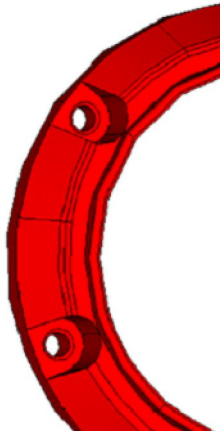

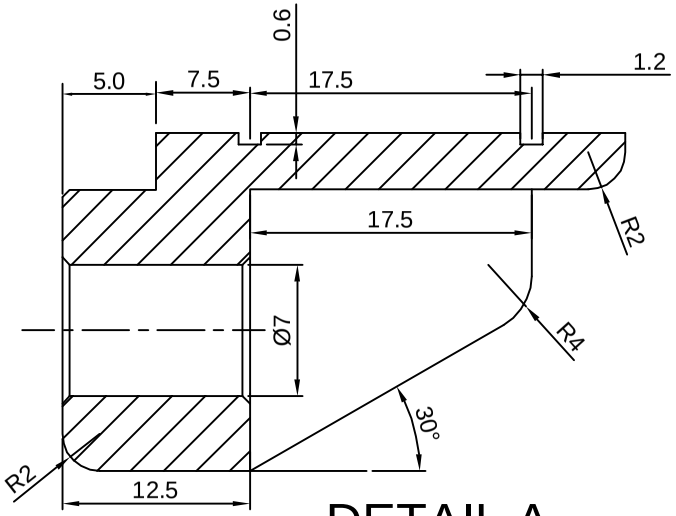

DETAIL A

1. HELICAL GROOVES 0.6 DEEP X 1.2 WIDE, 15.0 MM DEEP
2. ALL SHARP EDGES MACHINED TO 0.4X45°.

			01	BLANK		ø176.0 X 35.0		AL. ALLOY			12	
VAR.00	REMARKS	VAR NO.	ITEM NO.	DESCRIPTION	STD	DRAWING NO.	IT.NO. / VAR	MATL. CODE / MATL. SPECN.	A C	UNIT	UNIT WT. / QTY.	GS / ZONE

TYPE OF PRODUCT: GSM 420

NAME OF CUSTOMER: BHARAT HEAVY ELECTRICALS LTD. HYDERABAD

	NAME	SIGN.	DATE	NO.OF VAR.
DRN	AL		18.01.16	
CKD	AL		19.01.16	
APPD	MM RAO		20.01.16	

REV.	DATE	ALTERED / CHECKED	REV.	DATE	ALTERED / CHECKED
ZONE			ZONE		

DEPT. GSG CODE 35 | GRADE OF TOL. DIM. C/M/F | SCALE NTS | WEIGHT(KG)

REF. TO: RD DG 4 35 0619 6110 | ITEM NO. 2 | NO.OF ITEMS 01

TITLE: FLANGE I | CARD CODE

DRAWING NO. RD DG 4 35 0619 6112 | REV. 0

SHEET NO. | NO. OF SHEETS

THE INFORMATION ON THIS DOCUMENT IS THE PROPERTY OF BHARAT HEAVY ELECTRICALS LIMITED.
IT MUST NOT BE USED DIRECTLY OR INDIRECTLY IN ANY WAY DETRIMENTAL TO THE INTEREST OF THE COMPANY.

REF. DRG. NO. | SIGN. AND DATE | INVENTORY NO.