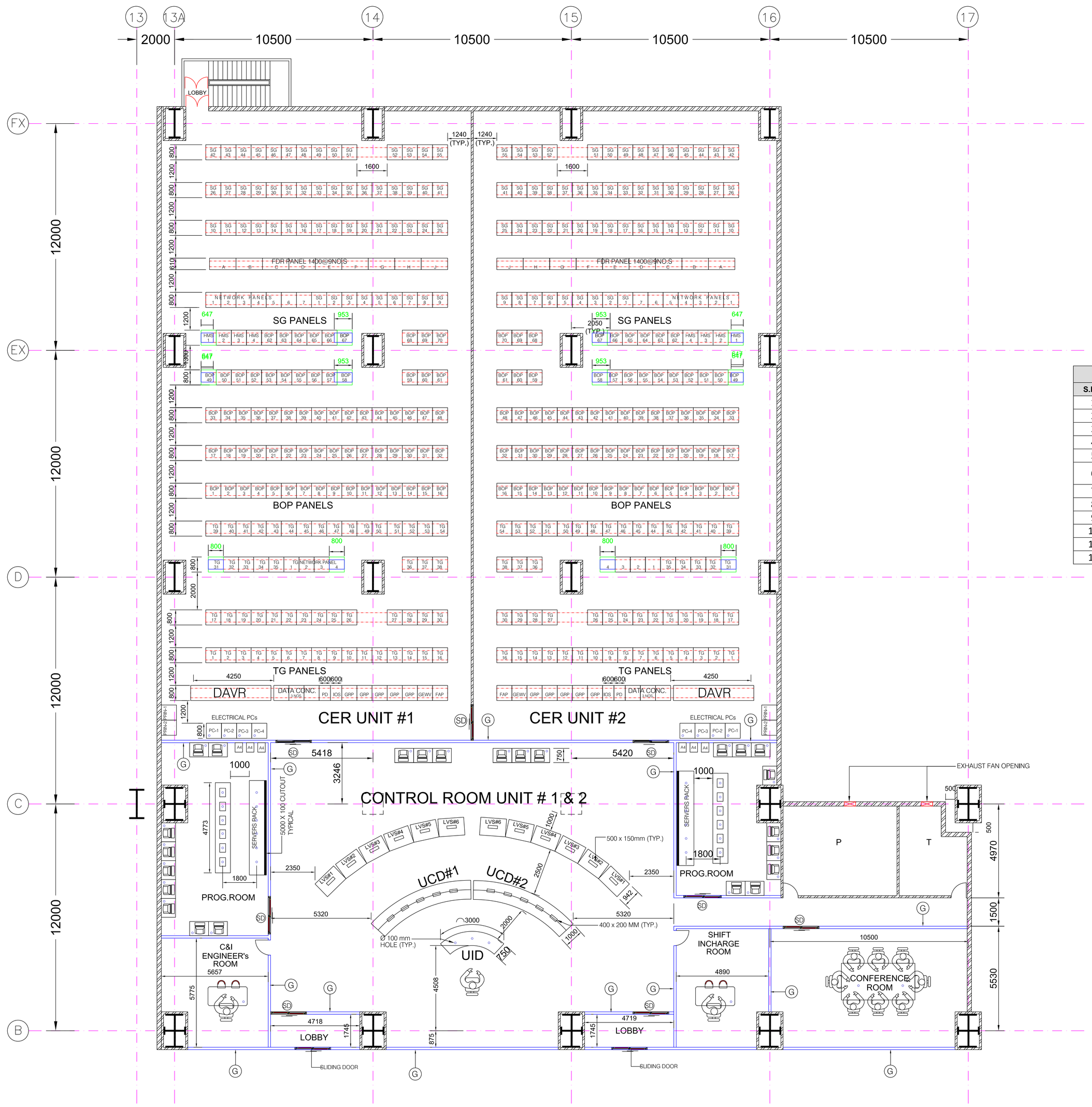

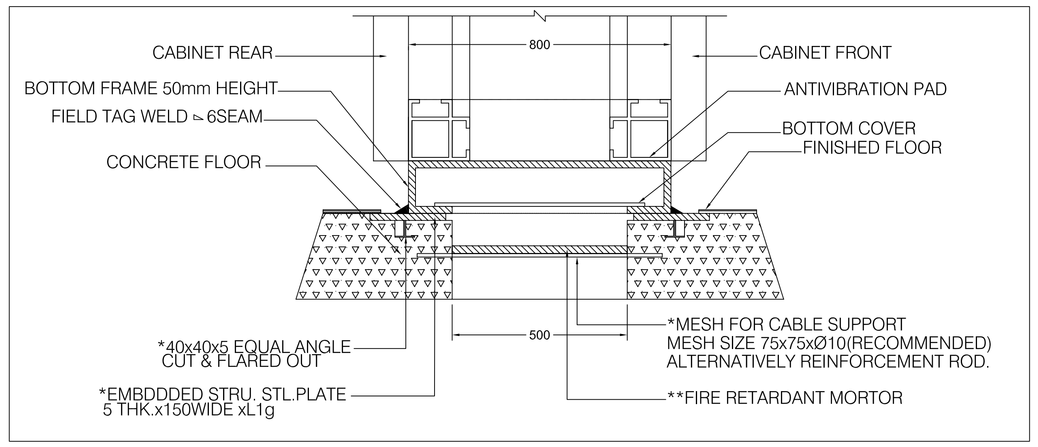

(TYPICAL PANEL MOUNTING DRAWING)

QUANTITY PER UNIT

S.NO.	ITEM	SIZE IN mm	QTY.
1	BOP PANEL	800 x 800	64
2	TG PANEL	800 x 800	52
3	SG PANEL	800 x 800	55
4	FDR PANEL	1400 X610	9
5	FAP	800 x 800	1
6	GEN END WINDG VIB PNL	800 x 800	1
7	PD MONITORING	1000 X 800	1
8	GRP	800 X 800	5
9	DATA CON.	800 X 800	3
10	DAVR	4250 X 800	1
11	NET WORK PANELS	800 X 800	7
12	HMS	800 X 800	6

(TYPICAL DRAWINGS)

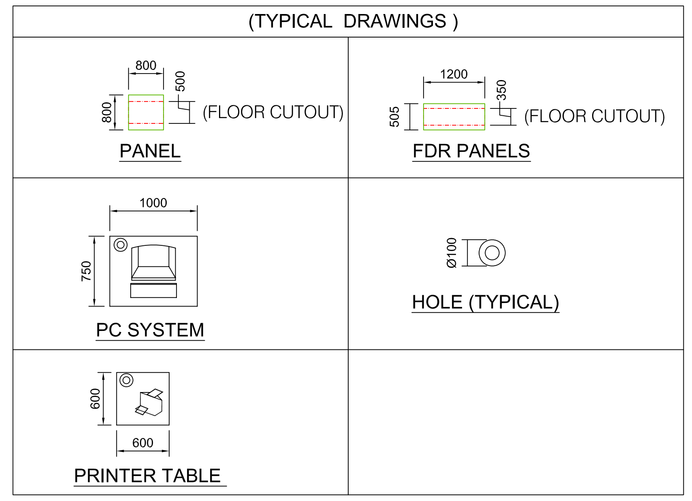

LEGENDS:-

UCD	- UNIT CONTROL DESK
UID	- UNIT INCHARGE DESK
DAVR	- DIGITAL AUTOMATIC VOLTAGE REGULATOR
SG	- STEAM GENERATOR
TG	- TURBINE GENERATOR
GRP	- GENERATOR RELAY PANEL
FAP	- FIRE ALARM PANEL
DATA CONC.	- DATA CONCENTRATOR
HMS	- HEART MANAGEMENT SYSTEM PANEL
G	- GLAZED GLASS WALL
	- BRICK WALL
VB	- VERTICAL BRACING
FPD	- FIRE PROOF DOOR
EF	- EXHAUST FAN OPENING
SD	- SLIDING DOOR
LVS	- LARGER VIDEO SCREEN
P	- PANTRY
T	- TOILET
	-EXHAUST FAN OPENING

NOTES:-

1. CONTROL ROOM, CONTROL EQUIPMENT ROOM, PROGRAMMER ROOM, CONFERENCE ROOM ETC. SHALL BE AIR-CONDITIONED.
2. CONTROL ROOM FALSE CEILING SHALL BE AT A HEIGHT OF 3.65 MTR. AND CER FALSE CEILING SHALL BE AT A HEIGHT OF 3.0 MTR. FORM F.F.L.
3. INSERT PLATE OF 150 mm WIDE AND 6 mm THICK SHALL BE PROVIDED FOR FLOOR CUTOUT FOR EACH PANEL UPTO CUTOUT LENGTH.
4. COLUMN C-14 & C-15 (1100 x1100mm)TO BE APPROPRIATELY ENCASED.

LAYOUT OF CR & CER AT 18 M FOR UNIT #1 & 2

एन टी पी सी
NTPC

N T P C LIMITED
(A GOVERNMENT OF INDIA ENTERPRISE)
ENGINEERING DIVISION

PROJECT :- DARLIPALLI SUPER THERMAL POWER PROJECT
STAGE-1 (2x800 MW)

TITLE :- LAYOUT OF CR & CER AT 18 M FOR UNIT #1 & 2

REV.NO.	DESCRIPTION	DRAWN	DESIGN	CHKD.	L/O	W/S	C&I	ARCH.	E	C	APPD	DATE
0	RELEASED FOR FURTHER ENGINEERING											29.03.13
		CLEARED BY										

SIZE	SCALE	DRG. NO.	REV. NO.
A-1	N.T.S.	9549-405-POI-F-003	0

This document is the property of NATIONAL THERMAL POWER CORPORATION LTD.
No part of this document will be reproduced by any means without the written permission.