TECHNICAL SPECIFICATION FOR EARTHING CABLE

1.0 SCOPE

To supply the Earthing cables made out of pure electrolytic high conductivity tinned, braided copper wire along with tinned copper connector integral crimping at both ends as per drawing referred in the enquiry/Purchase order.

2.0 DESCRIPTION

The dimension shall be as per BHEL drawing Electrolytic high conductivity tinned copper wire shall be as per IS 282.Tinned copper connector are to be used at both ends of the earthing wire ,flattened/punched/ trimmed for integral type termination to meet drawing dimensions.

3.0 DRAWING

Drawing number :-3-0-114-27037/Rev 02

4.0 PACKING

As per the manufacturer's standard procedure.

5.0 INSPECTION

The following inspection shall be carried out.

1. Dimensional check up

2. Wire material quality check up for one piece.

3.The minimum length of each piece shall be as per the drawing.

6.0 Three sample pieces should be submitted to engineering for approval .Bulk manufacture can be taken up only after obtaining approval.

PREPARED	Pangtey Sulaxana Pangtey	**CHECKED**	C.GANESH

FIRST ANGLE PROJECTION (ALL DIMENSIONS IN MILLIMETRES)

R05-229/C

CAUTION THE INFORMATION ON THIS DOCUMENT IS THE PROPERTY OF BHARAT HEAVY ELECTRICALS LTD. IT MUST NOT BE USED DIRECTLY OR INDIRECTLY IN ANY WAY DETRIMENTAL TO THE INTEREST OF THE COMPANY.

DRAWING No.

VARIANT NO	L	UNIT WT	MATERIAL CODE
01	180	0.08	96 002 274
02	325	0.12	96 002 324
03	800	0.19	96 002 325

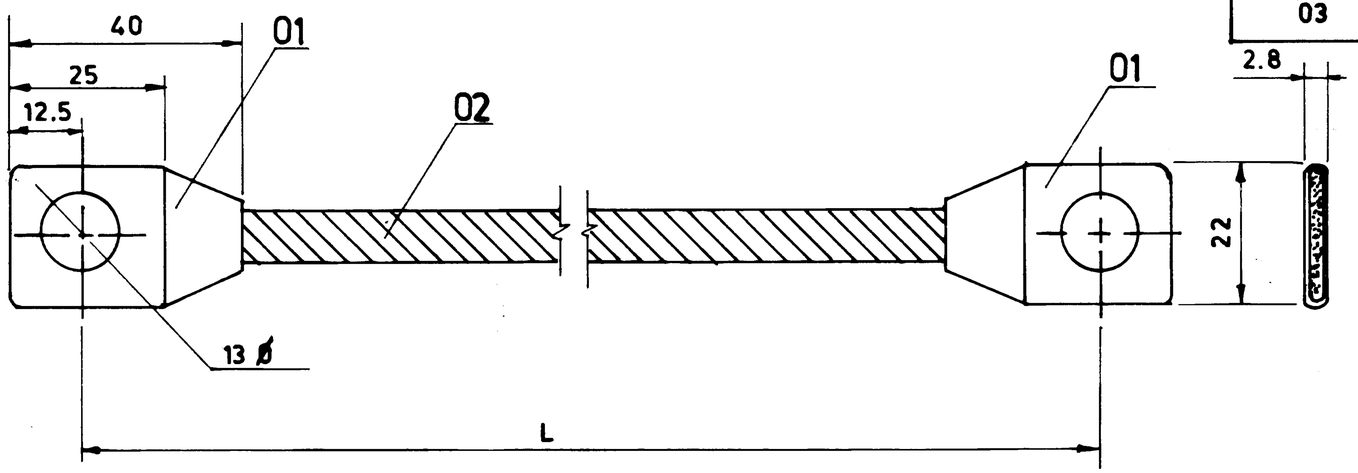

REF: PRQA : 590 FOR PAINTING
REF: PRQA : 500 FOR UNTOL. DIMNS

SPECIFICATION

ITEM 01. DOWELL'S COPPER TUBULER IN LINE CONNECTOR
TYPE CB-26 OR EQUIVALANT (SUBJECT TO APPROVAL)
ITEM 02. 7X7X18-36 SWG PURE ELECTROLYTIC HIGH CONDUCTIVITY TINNED COPPER
NOTE :- TENSILE STRENGTH TO WITHSTAND MINIMUM 155KGS

VARIANT No.	ITEM No.	DESCRIPTION	STD	DRAWING No.	ITEM No. / VAR No.	MATL. CODE / MATL. SPEC.	A / C	UNIT 01	UNIT WT. / QTY.

TYPE OF PRODUCT OR NAME OF CUSTOMER/PROJECT: ELECTROSTATIC PRECIPITATOR

Bharat Heavy Electricals Ltd., BOILER AUXILIARIES PLANT, RANIPET 632 406

	NAME	SIGN.	DATE
DRN.	M.B	M.	09.10.87
CHD.	JVR		10-10-87
APPD.	JVR		

NO. OF ITEMS

REV.	DATE	ALTERED / CHECKED	REV.	DATE	ALTERED / CHECKED
02	30.06.93	ALTERED NGR / CHECKED	01	13 02 86	ALTERED M. / CHECKED
		SPEC. NO. DELETED.			ITEM NO 1 TYPE CHANGED.

DEPT.	GRADE OF UN TOL. DIM.	SCALE	WEIGHT(kg)	REF. TO ASSY/OLD DRG.	ITEM NO.
CODE	C/M/F	—	—	3-00-114-26206/02	

TITLE: EARTHING CABLE

CARD CODE: U 01

DRAWING NO. 3-00-114-27037

REV. 02

SIZE A3