VINDHYACHAL STPP

STAGE-V
(1x500 MW)

AMENDMENT No. 1
(TECH SPEC No. PE-TS-389-555-A001)

COMPRESSED AIR SYSTEM

AMENDMENT No. 1 TO THE TECHNICAL SPECIFICATION PE-TS-389-555-A001
COMPRESSED AIR SYSTEM OF VINDHYACHAL STPP (1x500 MW)

AMENDMENT TO EXISTING CLAUSES OF THE TECHNICAL SPECIFICATION

S.No	Clause	Existing Description	To Be Read As (Amendment)
1.	1.1.3 of Volume IIB Section-C.1, Sheet 16 of 247	Four (4) Nos. Air Drying Plants Heat of compression (HOC) Rotary type/Dual Tower Type of min. 36 NM3/min. capacity connected to above IA & SA compressors with all instruments, control panels and other accessories as specified.	Two (2) Nos. Air Drying Plants Heat of compression (HOC) Rotary type/Dual Tower Type of min. 36 NM3/min. capacity connected to above IA & SA compressors with all instruments, control panels and other accessories as specified.
2.	1.1.6 of Volume IIB Section-C.1, Sheet 16 of 247	Four (4) Nos. Electronic Dew point meters.	Two (2) Nos. Electronic Dew point meters.
3.	Sheet 240 & 241 of 247	Four (4) Nos. Air Drying Plants Heat of compression (HOC) Rotary type/Dual Tower Type from P&ID of IA & SA System.	Two (2) Nos. Air Drying Plants Heat of compression (HOC) Rotary type/Dual Tower Type from P&ID of IA & SA System.
4.	Sheet 240 & 241 of 247	Four (4) Nos. Electronic Dew point meters from P&ID of IA & SA System.	Two (2) Nos. Electronic Dew point meters from P&ID of IA & SA System.
5.	(a) 3.1.8 (Page 20 of 247) and b) 4.1.1 (page 22 of 247) and c) 3.08.00 (page 38 of 247) and d) S.No.16 (page 212 of 247) e) Annexure-I (Oage 41-45 of 247) and f) 3.1.3 (page 18 of 247)	EOT Crane of 8T capacity (Electrically operated pendent controlled, overhead travelling type) and Air compressors ----------and EOT crane arrangement will be provided----during maintenance. and EOT Crane and Mandatory spares for crane package and Spec. for EOT Crane & Monorail Hoist and Monorail hoists/Cranes as necessary for handling of equipment after erection.	Monorail hoists/Cranes and it's mandatory spares are excluded from bidder's scope of work.

2. ADDITION OF CLAUSES

2.1 COMPRESSOR HOUSE LAYOUT

Compressor house layout (BHEL Drg. No.PE-389-555-ASK1-00) is added in the technical specification. Bidder has to accommodate it's compressor, dryer and various other components within the given indicated dimensions.

2.2 ELECTRICAL LOAD LIST

Electrical load list is added in the technical specification for bidder's compliance.

(TENTATIVE)

LOAD TITLE	RATING (KW)		UNIT (U)/STN (S)	Nos.		VOLTAGE CODE*	FEEDER CODE**	EMER. LOAD (Y)	CONT.(C)/ INTT.(I)	STARTING TIME >5 SEC (Y)	LOCATION	BOARD NO.	CABLE		BLOCK CABLE DRG. No.	CONTROL CODE	REMARKS	LOAD No.
	NAME PLATE	MAX. CONT. DEMAND (MCR)		RUNNING	STANDBY								SIZE CODE	NOs				
1	2	3	4	5	6	7	8	9	10	11	12	13	14	15	16	17	18	19
Instrument Air Compressor	320			1	1	C	U		C	Y	Compressor House		A	1				
Service Air Compressor	320			1	1	C	U		C	Y	Compressor House		A	1				
Instrument Air & Service air Compressor Control Panel	3.0			2	2	D	S		C	Y	Compressor House		B	1				
Air Dryer	2.0			1	1	D	S		C	Y	Compressor House		B	1				
AUTO DRAIN TRAP	0.3			6		E	S		I	Y	4 nos. feeders in compressor house. 1 nos. feeders in TG bldg at EL.0.0 M in B-C bay (one for each unit) & 1 no. feeder near DM plant bldg.		B	1				
Motor Space Heater - Instrument Air Compressor	0.3			1	1	E	D		I	Y	Compressor House		B	1				
Motor Space Heater - Service Air Compressor	0.3			1	1	E	D		I	Y	Compressor House		B	1				

NOTES:
1. COLUMN 1 TO 12 & 18 SHALL BE FILLED BY THE REQUISITIONER (ORIGINATING AGENCY); REMAINING COLUMNS ARE TO BE FILLED UP BY PEM (ELECTRICAL)
2. ABBREVIATIONS : * VOLTAGE CODE (7):- (ac) A=11 KV, B=6.6 KV, C=3.3 KV, D=415 V, E=240 V (1 PH), F=110 V (cc): G=220 V, H=110 V, J=48 V, K=+24V, L=-24 V
: ** FEEDER CODE (8):- U=UNIDIRECTIONAL STARTER, B=BI-DIRECTIONAL STARTER, S=SUPPLY FEEDER, D=SUPPLY FEEDER (CONTACTER CONTROLLED)

	LOAD DATA (ELECTRICAL)	JOB NO.	398	ORIGINATING AGENCY		PEM (ELECTRICAL)
		PROJECT TITLE	1x500 MW VINDHYACHAL STPP-V	NAME		DATA FILLED UP ON
		SYSTEM / S		SIGN.		DATA ENTERED ON
		DEPTT. / SECTION		SHEET 1 OF 1	REV. 00	DE'S SIGN. & DATE

VINDHYACHAL–V (1x500 MW)

BLOCK LAYOUT OF COMPRESSOR HOUSE

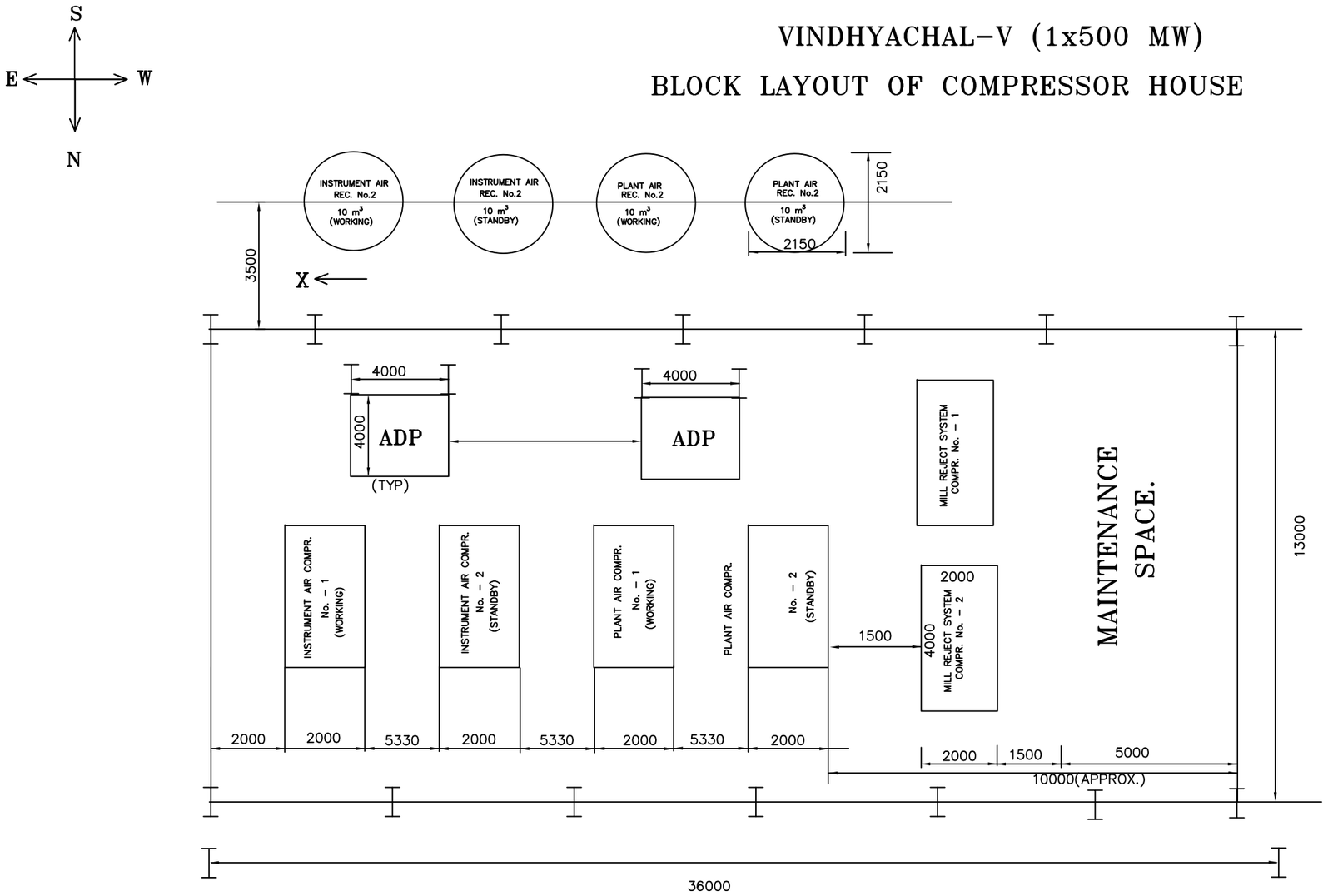

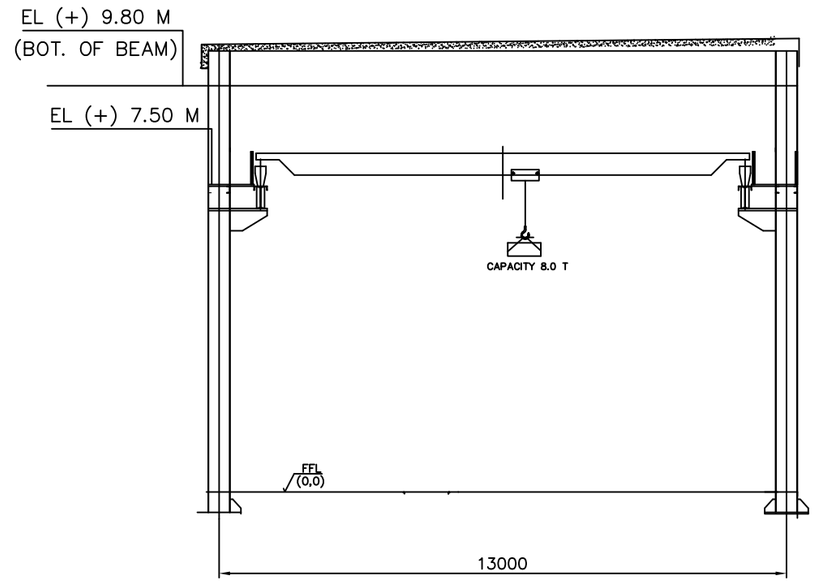

SECTION XX

NOTE

1. ALL THE INTERNAL DIMENSIONS ARE IN MM AND ARE TENTATIVE.
2. THIS BLOCK LAYOUT IS FOR PLANNING THE SPACE REQUIREMENT OF COMPRESSOR HOUSE ONLY.

STATUS: FOR TENDER PURPOSE.

SKETCH No. PE–389–555–ASK1 Rev 00