N T P C L T D.

1 x 500 MW FGUTPP-IV
at
UNCHAHAR (UP)

TECHNICAL SPECIFICATION
FOR

AUXILIARY STEAM PRESSURE REDUCING AND DESUPERHEATING STATION ALONGWITH ACCESSORIES

VOLUME - II B & III

SPECIFICATION No: **PE–TS –401-142–N101 (REV 00)**

BHARAT HEAVY ELECTRICALS LIMITED
POWER SECTOR
PROJECT ENGINEERING MANAGEMENT
PPEI, NOIDA, INDIA

N T P C L T D.

1 x 500 MW FGUTPP-IV
at
UNCHAHAR (UP)

TECHNICAL SPECIFICATION
FOR

AUXILIARY STEAM PRESSURE REDUCING AND DESUPERHEATING STATION ALONGWITH ACCESSORIES

VOLUME - II B

SPECIFICATION No: **PE–TS –401-142–N101 (REV 00)**

BHARAT HEAVY ELECTRICALS LIMITED
POWER SECTOR
PROJECT ENGINEERING MANAGEMENT
PPEI, NOIDA, INDIA

1.0 Volume – II B :

This volume is sub- divided into following sections: -

Section – A : This section outlines the scope of enquiry

Section – B : This section provides : " Project Information".

Section- C : This section indicates tech. Requirements specific to the contract, not covered in Section – D.

Section – D : This section comprises of tech. Specifications of equipments complete with data sheet A,B&C.

Data Sheet – A specifics data and other requirements pertaining to the equipment.

Data sheet – B specifics data to be filled by the bidder (Data Sheet B is contained in Volume – III.

Data Sheet – C indicates data/ documents to be furnished after the award of contract as per agreed schedule by the vendor (as applicable).

CONTENTS

SECTION	TITLE	SPECIFICATION NO	NO. OF SHEETS
Section-A	**Scope of enquiry**		3
Section-B	**Project Information**		2
Section-C	Specific Technical Requirements		24
1.00	Brief System Description		
2.0.0	Equipment to be provided by tenderer		
3.0.0	Specific technical requirements		
4.0.0	Spares, consumable and specified tools & tackles		
5.0.0	Spares		
6.0.0	Information to be furnished alongwith the offer by the bidder		
7.0.0	Drawings		
8.0.0	Quality Plan		
9.0.0	Customer Specification		
Data Sheet - A 1	Sizing Data For High Capacity Aux. Steam PRDS (HC-PRDS AS-22, FD-43, FD-30/44 & FD-28/31)		
Data Sheet - A 2	Sizing Data For Aux. Steam PRDS (AS-26)		
Data Sheet - A 3	Sizing Data For Low Temp. Desh (FD-43, FD-35/38, FD-46/47& DESH-1)		
Section D	**Equipment Specification** Specification For Control Valve (With Pneumatic Actuator (SMART))		51
Data Sheet A&B	Data Sheet For Control Valves (With Pneumatic Actuator)		
	Equipment Specification Steam Desuperheater		
Datasheet–A 4A	Data for Desupe rheater DESH-1A (OPTION-1)		
Datasheet–A 4B	Data for Desuperheater DESH-1B (OPTION-2)		

Data Sheet C	List of Documents and Data to be Submitted after Award of Contract		
Quality Plan	Quality Plan for Steam Desuperheater		
	Quality Plan for Control Valve		
Tender Drawings	Auxiliary Pr. Reducing and Desuperheating Station		
Spares	List of Spares		

FILLED-UP QUALITY PLAN AS MINIMUM REQUIREMENTS IS INCLUDED FOR CONTROL VALVE & STEAM DESUPERHEATER.

Section – A

Scope of Enquiry

SCOPE OF ENQUIRY

1.0 SCOPE

1.1 This specification covers the Design, Manufacture, Inspection and testing at manufacturer's works, proper packing for transportation and delivery to site of the Auxiliary Steam Pressure Reducing & Desuperheating Stations, along with accessories as mentioned in different sections of this specification for **1X500 MW FGUTPP-IV.**
The tenderer shall also quote for the following:-

a)Supervision of erection & commissioning of the equipment.
b)Recommended spares for 3 years of post-guarantee period operation.
c)Mandatory spares.

1.2 The quality plan enclosed forms the minimum requirement but not limited to be adhered to by the bidder. Bidder to sign and stamp the same and submit along with the offer as an acceptance. Similar to Quality Plan, Bidder is required to furnish Field Quality Plan (FQP). FQP shall indicate all inspection/test to be carried out at site covering the following:

i). Receipt of material.
ii). Storage or Conservation.
iii). Pre-Erection & Erection
iv). Pre-Commissioning, commissioning & post commissioning.

FQP shall furnish adequate instructions to be followed by erection & commissioning agency at site.

1.3 The bidder may quote for his standard, proven design of equipment and shall indicate any deviations from this specification in the enclosed schedule. In the absence of duly filled deviation schedule, it shall be presumed that the offer conforms exactly to this specification. The bidder shall also furnish the performance feedback data of the equipment from similar installations. However, the acceptance of the deviations/options is not binding on the Engineer/Owner.

1.4 The bids shall be in English language and SI Units.

1.5 **Bidder to note that CV test is required to be conducted on one type per size, CV value. Bidder to group such valves and indicate the same along with the price bid. Unpriced portion to be submitted to engineering.**

1.6 Following signed & stamped documents with company seal to be submitted by bidder.

a) Complete offer including calculation sheets, catalogues etc.
b) Quality Plan
c) Datasheet A & B, duly filled
d) Schedule of prices & unit prices, inspection schedule
e) Schedule of submission of drawings/documents, equipment manufacture, inspection & dispatch.

2 GENERAL TECHNICAL INSTRUCTIONS

1 It is not the intent here to specify all the details of design and manufacture. However, the equipment shall conform in all respects to high standard of design, engineering and workmanship and shall be capable of performing the required duties in a manner acceptable to the customer / consultant, who will interpret the meaning of drawing and specification and shall be entitled to reject any component or material which in his judgment is not in full accordance herewith.

2 The omission of specific reference to any component / accessory necessary for the proper performance of the equipments shall not relieve the supplier of the responsibility of providing such facilities to complete the supply within the quoted prices.

3 BHEL's / Customer's representatives shall be given access to the shop in which the equipments are being manufactured or tested and all test records shall be made available to them.

4 The Equipment covered under this specification shall not be dispatched unless the same have been finally inspected, accepted and Material Dispatch Clearance Certificate (MDCC) is issued by BHEL / CUSTOMER.

5 Bidder to note that none of the formats, technical documents, quality plan etc. should be modified or changed by them. In case bidder makes any modifications/change in BHEL formats, their offer would be liable for rejection.

SECTION – B

PROJECT INFORMATION

CLAUSE NO.	PROJECT INFORMATION
1.00.00	**BACKGROUND** Feroze Gandhi Unchahar Thermal Power Station, FGUTPS was conceived as a Load Centre coal based Power Station of 1050 MW capacity by UPSEB. The land for the project was acquired and stage-I (2x210MW) was implemented by UPSEB. The 2x210 MW Unchahar station was taken over by NTPC from Uttar Pradesh Rajya Vidyut Utpadan Nigam of Uttar Pradesh in 1992. Thereafter, NTPC implemented Stage- II (2x210 MW) and Stage-III (1X 210 MW). The present expansion proposal is to install one additional unit of 500 MW under Stage-IV thus making the ultimate capacity of the FGUTPP 1550 MW.
1.01.00	**LOCATION AND APPROACH** The plant is located in Raebareli district of Uttar Pradesh, having latitude and longitude of 25°54'50"N and 81°19'50"E respectively. It is bounded by villages Khnapur, Faridpur and Khaliqpur Khurd. Mustafabad town is located at a distance of about 3 Kms from the plant. Unchahar railway station on Allahabad-Raebareli broad gauge (BG) section of Northern Railway (NR) is 2 Kms away. The nearest airport is located at Lucknow a distance of approximately 110 km from the project site. Vicinity Plan of the project is placed at **Annexure-I**
1.02.00	**LAND REQUIREMENT** During the implementation of FGUTPS, Stage-I, II & III total area of about 2203 acres of land was acquired. The plant facilities, ash disposal and township for this expansion Stage-IV (1x500 MW) would be accommodated within the available land with dismantling and relocation of some buildings. No additional land has been envisaged to be acquired for this expansion project.
1.03.00	**WATER** As per agreement between NTPC & Irrigation department, 105 Cusec of water is supplied through S.S Canal to NTPC-Unchahar. The Stage-IV (500MW) consumptive water requirement shall be accommodated within the existing commitment of water to FGUTPP. Sharda sahayak canal and Dalmau Pump House (DPH) on Purwa Branch Canal are available sources of water for the project and therefore, the make up water requirement for the plant is proposed to be drawn from these sources.
1.04.00	**COAL AVAILABILITY AND TRANSPORTATION**
1.04.01	**Coal Availability**

SECTION – C

SPECIFIC TECHNICAL REQUIREMENTS

1.0.0 BRIEF SYSTEM DESCRIPTION

1.1.0 Auxiliary steam system is designed to provide steam for the turbine auxiliaries, boiler auxiliaries and fuel oil heating system during start-up, low loads and normal running of unit.

1.2.0 The system comprises of two auxiliary steam pressure reducing and desuperheating stations (PRDS). One "High capacity PRDS" with tapping off steam from main steam line to meet auxiliary steam requirements during unit start-up, low loads & for fuel oil system, and the other "Low Capacity PRDS" with tapping off steam from CRH line to meet auxiliary steam requirements during normal running. Spray water required for desuperheating will be tapped off from Boiler Feed Pump discharge.

1.3.0 These two stations will reduce the pressure and temperature of the steam tapped off from CRH line and main steam line to 18 kg/cm^2 (abs) & 320°C at the high temperature auxiliary steam header and subsequently to 18 kg/cm^2 (abs) & 240°C at the low temperature auxiliary steam header through a suitable desuperheater between the high temperature and low temperature auxiliary steam headers.

2.0.0 EQUIPMENT TO BE PROVIDED BY TENDERER

2.1.0 AUXILIARY STEAM PRDS COMPRISING OF :

2.1.1 Control Valves & Accessories:

2.1.1.1 High Capacity Combined Pressure Reducing & Desuperheating Valve AS-22 (from MS line)	:	One No. / Unit
2.1.1.2 Low Capacity PRV on CRH Line (AS-26)	:	One No. / Unit
2.1.1.3 Spray Pressure Control Valves for AS-22 (FD-30 & 44)	:	Two Nos. / Unit
2.1.1.4 Spray Temperature Control Valves for AS-22 (FD-28 & 31)	:	Two Nos. / Unit
2.1.1.5 Spray Pressure Control Valves for DESH-1 (FD-35 & 38)	:	Two Nos. / Unit
2.1.1.6 Spray Temperature Control Valves for DESH-1 (FD-46 & 47)	:	Two Nos. / Unit
2.1.1.7 Block Valve for Spray Header (FD-43)	:	One No. / Unit

2.1.1.5 Each control valve shall be supplied with the accessories specified in the relevant data sheets at Section-D.

2.1.2 Desuperheater:

2.1.2.1 Direct mixing type desuperheater DESH-1A (OPTION-1)	:	One No. / Unit
Direct mixing type desuperheater DESH-1B (OPTION-2)	:	One No. / Unit

2.1.2.2 The desuperheater shall be complete with pipe, spray nozzle along with necessary attachment as specified in section-D. Insertion type desuperheater suitable for mounting on owners pipe are not acceptable.

3.0.0 SPECIFIC TECHNICAL REQUIREMENTS FOR CONTROL VALVES & ACCESSORIES:-

The requirements in this section are specific for this project and shall over-ride the specification under section-D in case of any contradiction.

1. **All the formats in Volume-III, SCHEDULE OF SUBMISSION OF DRG./DOC. and QUALITY PLAN (BHEL Format) should filled-up and furnished with the bid, complete in all respect. In the absence of those, the bid would be considered incomplete and liable for rejection.** Catalogue, Leaflets related with the models of Control Valves as well as each Accessory must be furnished with the offer.

2. The Hook-up diagram for Control valve, attached in Section-C. the scope demarcation as indicated should be adhered. The connection details at Instrument Air valve shall be furnished to successful bidder after the award of contract.

3. Valve Body Sizes shall be quoted to take care of the specification requirements like parameters, and limitations of Fluid outlet velocities, Noise Level etc. **However Port (Trim) Sizes shall be selected to suit CV requirement for achieving percentage valve lift as per Technical Specification.**

4. Bidder to note that, **wherever downstream side of the valve is subjected to the Vacuum service, bidder to offer double Gland packing, and in that case, flow direction of working fluid shall be to close the valve**. Separate indication for the same has not been made in the data sheets-A.

5. For valves subjected to cavitation service, anti-cavitation trim shall be provided.

6. In case during erection/commissioning of the control valve, any spares are required which have not been specified in the Start-up/commissioning spares list, the same will have to be supplied by the bidder free of cost

7. Facility to adjust the maximum travel of the stem & starting point of travel shall be incorporated.

8. SS nameplate to control valve shall include Tag no./ KKS no./ Sl. No./ Body material/ size/ Press Rating/ Trim material/ Trim type/ action on air failure/ diaphragm air press at full open and close condition

9. Hand wheel shall have open/ close direction.

10. Limit switch shall be designed for 1,00,000 operations.

11. JB shall be 36 ways as per enclosed hook-up diagram.

12. The material of filter for Air Filter Regulator shall be Sintered bronze.

13. Bidder to indicate pick-up & drop out voltage for all solenoid valves.

14. Protection class for Limit switches, I/P converter and Position transmitter shall be IP-65 only.

15. All JBs and valves shall be with double compression type Ni plated brass cable glands.

16. Solenoid valve class of protection shall be IP-65.

17. All local cabling upto JBs shall be in Conduit (Flexible/Rigid).

18. The smart positioner provided with Control Valves shall be compatible with Universal Hart Calibrator.

19. In order to interface with METSO system , the smart positioner of Control Valves has to be HART Compatible. Vendor to provide DTM(devise type manager) / DTD(device type description) files for engineering.

20. Positioner shall have both fail freeze and fail safe feature.

21. SPARES: The following spares are required to be offered

(A) Mandatory Spares:

The items listed in list of mandatory spares is indicated in Cl. 5.1.0 of section-C, of this specification, are the essential spares required to be offered by the bidder, and the price for which (Lump sum as well as individual) for each item to be quoted separately under the separate heading. The format for price schedule to be filled-up by the bidder is enclosed in Volume-III

The prices for Mandatory spares indicated by the bidder shall be used for bid evaluation purposes.

Each Case / Container containing Mandatory spares shall be clearly marked or labelled on the outside with the description of the spares contained in it. When more than one items of spare parts are packed in a single Case / Carton, a general description of the contents shall be shown outside of such case, and detailed list enclosed. All Cases, Containers and Packages must be suitably marked and numbered for the purpose of identification.

(B) Recommended Spares:

In addition to the Mandatory spares mentioned, the bidder shall also furnish a List of Recommended spares for 3 years of normal operation of the Control valves / Accessories. The BHEL/Customer reserves the right to buy any or all of the recommended spares.

The prices of these spares will remain valid for a period of minimum 6 months after the placement of order.

(C) Start-up & Commissioning Spares:

Start-up and Commissioning spares are those spares, which may be required during the start-up and commissioning of the Control Valves. All start-up spares, which are supplied under this contract, shall be strictly interchangeable with the parts for which they are intended for replacements. The format for price schedule to be filled-up by the bidder is enclosed in Volume-III

The Start-up and commissioning spares indicated by the bidder shall be a part of the main Control valves supply. However bidder to indicate prices separately. The list of these spares required (as minimum) is given in Cl 5.0.0 (a). Bidder may include any additional Start-up and commissioning spares, if required.

Bidder to indicate the service life expectancy period for the spare parts under normal working conditions. The spares shall be treated and packed for long storage, under climatic conditions prevailing at site. Small items shall be packed in sealed transparent plastic bags with desiccator's packs as necessary.

22. Documentation:

(A) Along with the bids: following documents for the project

a) Signed and stamped compliance certificates in attached format (VOL.-III).

b) "Schedule of prices" and "Schedule of unit Prices" in attached format (VOL.-III).

c) Schedule of submission of Drg. / Doc, Equip. Manufacture, Inspection and Dispatch.

d) Inspection schedule

e) Quality Plan Duly signed and Stamped

(B) After the award of contract:

The documentation as listed below for the project

6 sets of the following documents + 3 sets of CDs to be enclosed with the bids for Approval:

a. Assembly (dimensional) drawings.

b. Valve Edge preparation details.

c. Data sheet-C completely filled-up.

d. Hook-up diagram of Control Valve with Actuator & Accessories.

e. Valve & Actuator assembly dimensional drawings with weights.

f. Quality Plan duly signed and stamped.

g. All calculations like CV, Noise Level, Valve Outlet Velocity, Actuator sizing etc.

h. All relevant catalogues for the models of the valves as well as accessories finalised.

i. Bar chart to indicate the time schedule for procurement, manufacture, testing and dispatch.

(B) Final documentation:

The documentation as listed below will separate for respective projects

1. Category –I & IV Approved final drawings/data sheets, – 20 sets with 4 CD-ROMS
   Valve sizing calculations, Noise level calculations and
   Valve Outlet Velocity calculations.

2. Test certificates – 20 sets.

3. Operation & Maintenance Manuals for Control Valve, Actuator and all the Accessories. – 20 sets with 4 CD-ROMS

23. Guidelines for Packing

- ✓ After inspection of control valves assembly. Smart Positioner along with Pressure Gauge shall be disassembled & packed separately.
- ✓ Threaded connection of Smart Positioner & Pressure Gauge shall be shipped with the end caps fitted to avoid any damage.
- ✓ Instructions with sketch for mounting the Smart Positioner & Pressure Gauge shall be sent along with the aforesaid accessories.
- ✓ Packing of the control valves and Smart Positioner along with Pressure Gauge shall be done in separate wooden boxes/cases in order to avoid damage during transit and also during storage at site in tropical climatic conditions for a period of 18-24 months.
- ✓ All valves & smart positioner along with pressure gauges shall be packed properly with quality wooden planks with proper wooden frame support. Moreover the valves are internally covered with polythene sheets to protect from the water and moisture entry.
- ✓ Stronger shock absorbing cover material like expanded Polyurethane which can take any direct impact on it shall be used for packing
- ✓ Proper reaper support to be provided in the packing and Valve assembly to be aligned properly to avoid the damage of accessories during transit due to vibration effect.
- ✓ Marking for Fragile & Condensing environment shall be done on the packing box.

<u>The Following Details are to be marked on the Packing Cases</u>

- ✓ Address of consignee
- ✓ Purchase order no.
- ✓ Description of items or title of packing list
- ✓ Weight
- ✓ Dimension of the Box
- ✓ Marking showing upright position
- ✓ Marking showing sling position
- ✓ Marking showing umbrella
  (i.e. for machines/components to be stored under covered storage)

4.0.0 SPARES, CONSUMABLE AND SPECIFIED TOOLS & TACKLES:

4.1.1 Commissioning Spares & Consumables

The bidder shall supply spares and consumables for all the above valves & desuperheater required during start-up. A list of all spares and consumables to be supplied shall be submitted along with the bid.

4.1.2 Recommended Spares

The bidder shall submit a list of recommended spares for all the above valves and desuperheaters for three years of normal operation. These are to be quoted separately & unit prices to be indicated, to enable placement of a separate order later if required.

4.1.3 Special Tools & Tackles

The bidder shall supply one complete set of special tools & tackles required for the erection, assembly, disassembly & maintenance of the equipment. A list of such tools & tackles to be supplied shall be submitted along with the bid.

4.1.4 Bidder to indicate the service life expectancy period for the spare parts under normal working conditions. The spares shall be treated and packed for long storage under climatic conditions prevailing at site. Small items shall be packed in sealed transparent plastic bags with desiccators' packs as necessary.

5.0.0 SPARES: The following spares are required to be offered.

a) Stat-up & Commissioning spares:

i) Start-up and Commissioning spares are those spares, which may be required during the start-up and commissioning of the Control Valves. All start-up spares, which are supplied under this contract, shall be strictly interchangeable with the parts for which they are intended for replacements. The format for price schedule to be filled-up by the bidder is enclosed in Volume-III

ii) The Start-up and commissioning spares indicated by the bidder shall be a part of the main Control valves supply. However bidder to indicate prices separately. The list of these spares required to be supplied shall be submitted along with the bid.

LIST OF COMMISSIONING SPARES

S.No.	ITEM DESCRIPTION	QUANTITY REQUIRED (per unit)
1	Gaskets	One (1) set with each control valve Tag
2	Gland Packings	One (1) set with each control valve Tag
3	Cu Tubing	15 m. per Valve

5.1.0 LIST OF MANDATORY SPARES FOR APRDS PACKAGE

Clause No.	LIST OF MANDATORY SPARES FOR SG & AUXILIARIES	
1.22.00	**Auxiliary Steam Pressure Reducing & Desuperheating System**	
	(1) **High Capacity PRDS System (MS)**	
	1.0 Desuperheater liners	1 Set*
	(1.1) Steam pressure reducing cum desuperheating valves	
	(i) Stem	1 No.
	(ii) Disc	1 No.
	(iii) Body seat rings	2 Nos. for each type, size and rating of valves
	(iv) Gland packings	3 Nos. for each type, size and rating of valves
	(v) Pressure seal ring	3 Nos.
	(vi) Gasket	3 Nos.
	(1.2) Spray water line control valves	
	(i) Valve trim including cage, plug, stem, seat rings, guide bushings, stem packing	1 No. for each size, type & rating of valves
	(2.0) **Low Capacity PRDS System (CRH)**	
	(2.1) Steam pressure reducing valve	
	(i) Stem	1 No.
	(ii) Disc	1 No.
	(iii) Body seat rings	2 Nos. for each type/size
	(iv) Gland packings	3 Nos. for each size, type & rating of valves
	(v) Pressure seal ring	3 Nos.
	(vi) Gaskets	3 Nos.

* One set means one complete replacement for an equipment.

Clause No.	LIST OF MANDATORY SPARES FOR SG & AUXILIARIES	
	(2.2) Spray water line control Valves	
	(i) Valve trim including cage, plug, stem, seat rings, guide bushings, steam packing	1 No. for each size, type & rating of valves

Clause No.	LIST OF MANDATORY SPARES FOR SG & AUXILIARIES	
10.00.00	**CONTROL VALVES, ACTUATORS & ACCESSORIES**	
	1 Pneumatic and electro-hydraulic actuator assembly	10% or 1 No. of each type, model and rating, whichever is more
	2 Position feed back transmitter	10% or 2 Nos. of each type, whichever is more.
	3 Valve trim (including cage, plug, stem, seat rings, guide bushings etc.)	1 Set for each type of control valve, whichever is more.
	4 Diaphragms, O' rings, seals etc. of all types, make etc.	100%
	5 Pneumatic air-filter/Regulator of each type, make, rating etc.	10% or 2 Nos. whichever is more
	6 Pressure Gauges of all types, make, rating etc.	10% or 2 Nos. of each type whichever is more.
	7 Solenoid valves	10% or 2 Nos. of each type whichever is more.
	8 Air lock relays	10% or 2 Nos. of each type whichever is more.
	9 Pneumatic relays	10% or 2 Nos. of each type whichever is more.
	10 Positioner unit	20% or 2 No. of each type whichever is more

Note: Bidder shall offer mandatory spares as per above list. Quantity shall be reviewed based on the equipment size, type, rating, make etc. during detailed engineering.

6.0.0 INFORMATION TO BE FURNISHED ALONGWITH THE OFFER BY THE BIDDER

The bidder shall submit four (04) sets of the following drawings and data along with the bid without which the offer will be deemed incomplete.

6.1.0. Calculations for valve sizing, actuator sizing, valve velocities and noise level.

6.2.0. Dimensioned outline drawing giving overall dimensions, material.

6.3.0. Duly filled technical data sheets 'B' for each control valve & desuperheater in the Proforma enclosed in volume III of this specification.

6.4.0. Hook-up diagram of control valves with actuator & accessories.

6.5.0. Reference list, Catalogue & Technical bulletins for various items being offered.

6.6.0. Any deviations from the specification / data sheet & reasons thereof.

6.7.0. Schedules as in Vol. III.

6.8.0. Quality Plan for the equipment offered in the format enclosed with this specification.

6.9.0. Field quality plan.

6.10.0. List of commissioning and recommended spares.

6.11.0. List of tools & tackles.

6.12.0. List of consumables / lubricants.

7.0.0 DRAWING

For general arrangement and terminal point details refer enclosed drawings nos. PE-DG-401-142-N101 in Volume II B Sec. D.

8.0.0 QUALITY PLAN

The bidder shall furnish quality plan along with the offer and the same shall be finalized before the issue of LOI. Detailed quality plan shall then be submitted by the successful tenderer after the placement of order for final approval by BHEL / its customer. BHEL / its customer shall indicate Customer Hold Points (CHP) in the approved quality plan beyond which work shall not proceed without the approval of BHEL / its customer.
The quality plans enclosed in volume-II-B 'D' of the specification are for bidder's guidance only and are not exhaustive. The bidder shall comply with these and other minimum requirements specified in the specification and shall furnish his own quality plan in BHEL/Customer formats in the event of order based on the guidance given as above for BHEL/Customer's approval.

9.0.0 Customer Specification

CLAUSE NO.	GENERAL TECHNICAL REQUIREMENTS

6. Recommended practice for sizing large lead storage batteries for generating stations & sub-stations - IEEE-485-1985.
7. Printed Circuit Board - IPC TM 650, IEC 326C.
8. General Requirements & tests for printed wiring boards, IS:7405 (Part-I) 1973.

Control Valves

1. Control valve sizing - Compressible & Incompressible fluids - ISA S 75.01-1985.
2. Face to face dimensions of control valves - ANSI B 16.00 - 1973.
3. ISA Hand Book of Control Valves - (ISBN : B: 1047-087664-234-2).
4. Codes for pressure piping - ANSI B 31.1
5. Control Valve leak class - ISA RP 39.6

Process Connection & Piping

1. Codes for pressure piping "power piping" - ANSI B 31.1.
2. Seamless carbon steel pipe ASTM - A - 106.
3. Forged & Rolled Alloy steel pipe flanges, forged fittings and valves and parts - ASTM - A - 182.
4. Material for socket welded fittings - ASTM - A - 105.
5. Seamless ferritc alloy steep pipe - ASTM - A - 335.
6. Pipe fittings of wrought carbon steel and alloy steel - ASTM - A - 234.
7. Composition bronze of ounce metal castings - ASTM - B - 62.
8. Seamless Copper tube, bright annealed - ASTM - B - 168.
9. Seamless copper tube - ASTM - B - 75.
10. Dimension of fittings - ANSI - B - 16.11.
11. Valves flanged and butt welding ends - ANSI - B - 16.34.

Instrument Tubing

1. Seamless carbon steel pipe - ASTM - A 106.
2. Material of socketweld fittings - ASTM - A105.
3. Dimensions of fittings - ANSI - B - 16.11.

CLAUSE NO.	TECHNICAL REQUIREMENTS
	CONTROL VALVES, ACTUATORS & ACCESSORIES
1.00.00	**CONTROL VALVES, ACTUATORS & ACCESSORIES**
1.01.00	**General Requirements**
1.01.01	The control valves and accessories equipment furnished by the Bidder shall be designed, constructed and tested in accordance with the latest applicable requirements of code for pressure piping ANSI B 31.1, the ASME Boiler & pressure vessel code, Indian Boiler Regulation (IBR), ISA, and other standards specified elsewhere as well as in accordance with all applicable requirements of the "Federal Occupational Safety and Health Standards, USA" or acceptable equal standards. All the Control Valves, their actuators and accessories to be furnished under this Sub-section will be fully suitable and compatible with the modulating loops covered under the Specification.
1.01.02	All the control valves and accessories offered by the Bidder shall be from reputed, experienced manufacturers of specified type and range of valves.
1.01.03	For control valve such as pressure and temperature control valve for Aux PRDS applications, Separator Drain Control Valves etc., also refer to the corresponding mechanical section in addition to requirements stipulated in this subsection.
1.02.00	**CONTROL VALVE SIZING & CONSTRUCTION**
1.02.01	The design of all valve bodies shall meet the specification requirements and shall conform to the requirements of ANSI (USA) for dimensions, material thickness and material specification for their respective pressure classes.
1.02.02	The valve sizing shall be suitable for obtaining maximum flow conditions with valve opening at approximately 80% of total valve stem travel and minimum flow conditions with valve stem travel not less than 10% of total valve stem travel. All the valves shall be capable of handling at least 120% of the required maximum flow. Further, the valve stem travel range from minimum flow condition to maximum flow condition shall not be less than 50% of the total valve stem travel. The sizing shall be in accordance with the latest edition of ISA handbook on control valves. While deciding the size of valves, Bidder shall ensure that valves trim exit outlet velocity as defined in ISA handbook does not exceed 8 m/sec for liquid services, 150 m/sec. for steam services and 50% of sonic velocity for flashing services. Bidder shall furnish the sizing calculations clearly indicating the outlet velocity achieved with the valve size selected by him as well as noise calculations, which will be subject to Employer's approval during detailed engineering.
1.02.03	Control valves for steam and water applications shall be designed to prevent cavitation, wire drawing, flashing on the downstream side of valve and down stream piping. Thus for cavitation/flashing service, only valve with anti cavitation trim shall be provided. Detailed calculations to establish whether cavitation will occur or not for any given application shall be furnished.
1.02.04	Control valves for application such as SH Spray Control, RH spray Control, Heavy Oil Heating, pressurizing and Control system shall have permissible leakage rate as per leakage Class V. All other control valves shall have leakage rate as per leakage Class-IV.
1.02.05	The control valve induced noise shall be limited to 85 dBA at 1 meter from the valve surface under actual operating conditions. The noise abatement shall be achieved by valve body and trim design and not by use of silencers.

CLAUSE NO.	TECHNICAL REQUIREMENTS
2.00.00	**VALVE CONSTRUCTION**
2.01.00	All valves shall be of globe body design & straightaway pattern with single or double port, unless other wise specified or recommended by the manufacturer to be of angle body type. Rotary valve may alternatively be offered when pressure and pressure drops permit.
2.02.00	Valves with high lift cage guided plugs & quick-change trims shall be supplied.
2.03.00	Cast Iron valves are not acceptable.
2.04.00	Bonnet joints for all control valves shall be of the flanged and bolted type or other construction acceptable to the Employer. Bonnet joints of the internal threaded or union type will not be acceptable.
2.05.00	Plug shall be of one-piece construction cast, forged or machined from solid bar stock. Plug shall be screwed and pinned to valve stems or shall be integral with the valve stems.
2.06.00	All valves connected to vacuum on down stream side shall be provided with packing suitable for vacuum applications (e.g. double vee type chevron packing)
2.07.00	Valve characteristic shall match with the process characteristics.
2.08.00	Extension bonnets shall be provided when the maximum temperature of flowing fluid is greater than 280 deg. C.
2.09.00	Flanged valves shall be rated at no less then ANSI press class of 300 lbs.
3.00.00	**VALVE MATERIALS**

Sr. No.	Service	Body material	Trim Material
1	Non-corrosive, non-flashing and non-cavitation service except DM water	Carbon steel ASTM-A216 Gr. WCB for fluid temperature below 275 Deg. C Alloy steel ASTM-A217Gr. WC9 for fluid temperature above 275 Deg. C	316SS stellited with stellited faced guide posts and bushings.
2.	Severe flashing/cavitation services	Alloy steel ASTM-A217 Gr. WC9	440 C
3.	Low flashing/cavitation service	Alloy steel ASTM-A217 Gr. WC6	17-4 PH SS
4.	DM water service	316 SS	316 SS

NOTE Valve body rating shall meet the process pressure and temperature requirement as per ANSI B16.34.

However, Bidder may offer valves with body and trim materials better than specified materials and in such cases Bidder shall furnish the comparison of properties including cavitation resistance, hardness, tensile strength, strain energy, corrosion resistance and erosion resistance etc. of the offered material vis-a-vis the specified material for Employer's consideration and approval.

CLAUSE NO.	TECHNICAL REQUIREMENTS

4.00.00 END PREPARATION

Valve body ends shall be either butt welded/socket welded, flanged (Rubber lined for condensate service) or screwed as finalized during detailed engineering and as per Employer's approval. The welded ends wherever required shall be butt welded type as per ANSI B 16.25 for control valves of sizes 65 mm and above. For valves size 50 mm and below welded ends shall be socket welded as per ANSI B 16.11. Flanged ends wherever required shall be of ANSI pressure-temperature class equal to or greater than that of the control valve body.

5.00.00 VALVE ACTUATORS

All control valves shall be furnished with pneumatic actuators except for pressure and temperature control valve for auxiliary PRDS application (electro-hydraulic / pneumatically operated) and separator drain control valve (electro-hydraulic type).The Bidder shall be responsible for proper selection and sizing of valve actuators in accordance with the pressure drop and maximum shut off pressure and leakage class requirements. The valve actuators shall be capable of operating at 60 deg.C continuously.

Valve actuators and stems shall be adequate to handle the unbalanced forces occurring under the specified flow conditions or the maximum differential pressure specified. An adequate allowance for stem force, at least 0.15 Kg/sq.cm. per linear millimeter of seating surface, shall be provided in the selection of the actuator to ensure tight seating unless otherwise specified.

The travel time of the pneumatic actuators shall not exceed 10 seconds.

6.00.00 CONTROL VALVE ACCESSORY DEVICES

6.01.00 All pneumatic actuated control valve accessories such as air locks, hand wheels/hand-jacks, limit switches, microprocessor based electronic Positioner, diffusers, external volume chambers, position transmitters (capacitance or resistance type only), reversible pilot for Positioner, tubing and air sets, solenoid valves and junction boxes etc. shall be provided as per the requirements.

7.00.00 SPECIFICATIONS FOR MICROPROCESSOR BASED ELECTRONIC POSITIONER

1	Electrical	a) Input Demand Signal	4-20 mA
		b) Power Supply	Loop Powered from the output card of Control System.
		c) HART Protocol	Compatibility for Remote Calibration & Diagnostics (Super-imposed HART signal on input Signal (4-20 mA)
		d. Valve position sensing	Position sensing, 4-20 mA output signal to be provided for control system.
2	Environment	a) Operating temp.	(-)30 To 80 Deg. C
		b) Humidity	0-95 %

CLAUSE NO. | TECHNICAL REQUIREMENTS

		c) Protection class	IP-65 Minimum
3	Software for Configuration and Diagnostics	Software	Windows based software. Software shall meet the requirements for Configuration, Diagnostics, Calibration and Testing of the actuator.
		Diagnostic/Test features	Advanced diagnostic features like Stroke counter or Travel counter, Leakage in actuators, Valve Signature analysis, Step Response test, Valve friction /Jamming detection etc to be provided.
4	Test reports/ Certificates	Factory Valve Signature Tests Reports (Pr Vs Valve travel and Travel Vs I/P signal) are to be provided.	
		Test certificates as per Manufacture Standard/Relevant Standard are to be submitted.	
5	Configuration/ Calibration.	Remote & Local Calibration, Auto & Manual Calibration shall be possible.	
6	Operating Range	Full range/ Split range.	
7	Modes	Valve Action	Direct / Reverse Valve Action
		Flow Characterization	Possible to fit Valve Characteristic Curves- Linear , Equal percentage etc.
8	Fail Safe/Fail Freeze	Fail Safe/Fail Freeze feature is to be provided. (In case the fail freeze feature is not intrinsic to the positioner, Bidder shall achieve the same externally through solenoid valve connected in the pneumatic circuit).	
9	Pneumatic	Air capacity	Sufficient to handle the valves & actuators selected/ Boosters to be supplied, if required.
		Air pressure	To suit the air supply pressure/quality available.
		Process connection	¼" NPT
10	Performance	Characteristic deviation	<=0.5 % of span.

CLAUSE NO. | TECHNICAL REQUIREMENTS

		c) Protection class	IP-65 Minimum
3	Software for Configuration and Diagnostics	Software	Windows based software. Software shall meet the requirements for Configuration, Diagnostics, Calibration and Testing of the actuator.
		Diagnostic/Test features	Advanced diagnostic features like Stroke counter or Travel counter, Leakage in actuators, Valve Signature analysis, Step Response test, Valve friction /Jamming detection etc to be provided.
4	Test reports/ Certificates	Factory Valve Signature Tests Reports (Pr Vs Valve travel and Travel Vs I/P signal) are to be provided.	
		Test certificates as per Manufacture Standard/Relevant Standard are to be submitted.	
5	Configuration/ Calibration.	Remote & Local Calibration, Auto & Manual Calibration shall be possible.	
6	Operating Range	Full range/ Split range.	
7	Modes	Valve Action	Direct / Reverse Valve Action
		Flow Characterization	Possible to fit Valve Characteristic Curves- Linear , Equal percentage etc.
8	Fail Safe/Fail Freeze	Fail Safe/Fail Freeze feature is to be provided. (In case the fail freeze feature is not intrinsic to the positioner, Bidder shall achieve the same externally through solenoid valve connected in the pneumatic circuit).	
9	Pneumatic	Air capacity	Sufficient to handle the valves & actuators selected/ Boosters to be supplied, if required.
		Air pressure	To suit the air supply pressure/quality available.
		Process connection	¼" NPT
10	Performance	Characteristic deviation	<=0.5 % of span.

CLAUSE NO.

TECHNICAL REQUIREMENTS

		Ambient temp effect	<=0.01 %/ deg C or better.
10	EMC & CE Compliance	Required to International Standard like EN/IEC.	EN50081-2 & EN50082 or equivalent.
11	Accessories	In-built Operator Panel	Display with push buttons for configuration and display on the positioner itself (Password protected/Hardware lock).
		Hand Held Hart Calibrator	Universal Hart Calibrator to be provided (for quantity, refer *Part-A: Contract quantities* of the specification).
		Press Gauge Block	For supply & output pressures, Air Filter Regulator and other accessories shall be provided on as required basis for making system complete.
		Electrical Cable Entry	1/2'"NPT, side or bottom entry to avoid water ingress.
		Valves Mounting Assembly	For Sliding Stem/Rotary/Single acting/Double acting actuators on as required basis

*** Note**:

Employer is providing a centralized HART management system including the HART multiplexing/ interfacing system. The HART signals shall be picked up from marshalling terminals of DDCMIS (SG/TG DDCMIS as well as BOP DDCMIS), as applicable. The details of the above mentioned employer's HART management system are as below:

The following functionalities are achieved through industry standard softwares of the HART management system for electronic transmitters, temperature transmitters and analysers:

a) Constant scanning to monitor faults or changes to instrument configuration.

b) Employer-defined and standard calibration and configuration procedures for all transmitters.

c) Constant signal data collection facilities to maintain continuously updated records.

d) Automatic tracking of configuration changes made in the field, such as may be introduced by hand-held communicator. All configuration function associated with hand-held communicators shall be available in the system.

CLAUSE NO.	TECHNICAL REQUIREMENTS
	e) Event and log reports on screen as well as on printer.
	f) Any addition/deletion of transmitter will be reported on printer and logged in hard disk.
	Further, the positioners shall be monitored from the above described HART management system .To achieve this, Bidder shall provide the necessary software to achieve the functionalities described above under "Remote Configuration and Diagnostics", and this software shall be loaded in the Employer's HART management system.
8.00.00	**TEST AND EXAMINATION**
	All valves shall be tested in accordance with the quality assurance programme agreed between the Employer and Contractor, which shall meet the requirements of IBR and other applicable codes mentioned elsewhere in the specifications. The tests shall include but not be limited to the following:
8.01.00	Non Destructive Test as per ANSI B-16.34.
8.02.00	Hydrostatic shell test in accordance with ANSI B 16.34 prior to seat leakage test.
8.03.00	Valve closure test and seat leakage test in accordance with ANSI-B 16.34 and as per the leakage class indicated above.
8.04.00	Functional Test: The fully assembled valves including actuators control devices and accessories shall be functionally tested to demonstrate times from open to close position.
8.05.00	CV Test: Please refer Cl No. 1.00.00, Sub-section-IV:I9 (Type test requirements), Control Valves.
	Bidder shall furnish all the control valves under this main plant package as finalized during detailed engineering stage without any price repercussions whatsoever depending on the process requirements. All the control valves provided by the Bidder for this project shall meet the specifications requirements specified herein. Specification for control valves in this Sub-section has to be read in conjunction with other relevant Sub-sections of this specification.

TITLE

CONTROL VALVE HOOK-UP DIAGRAM WITH SMART POSITIONER

1 X 500 MW FGUTPP

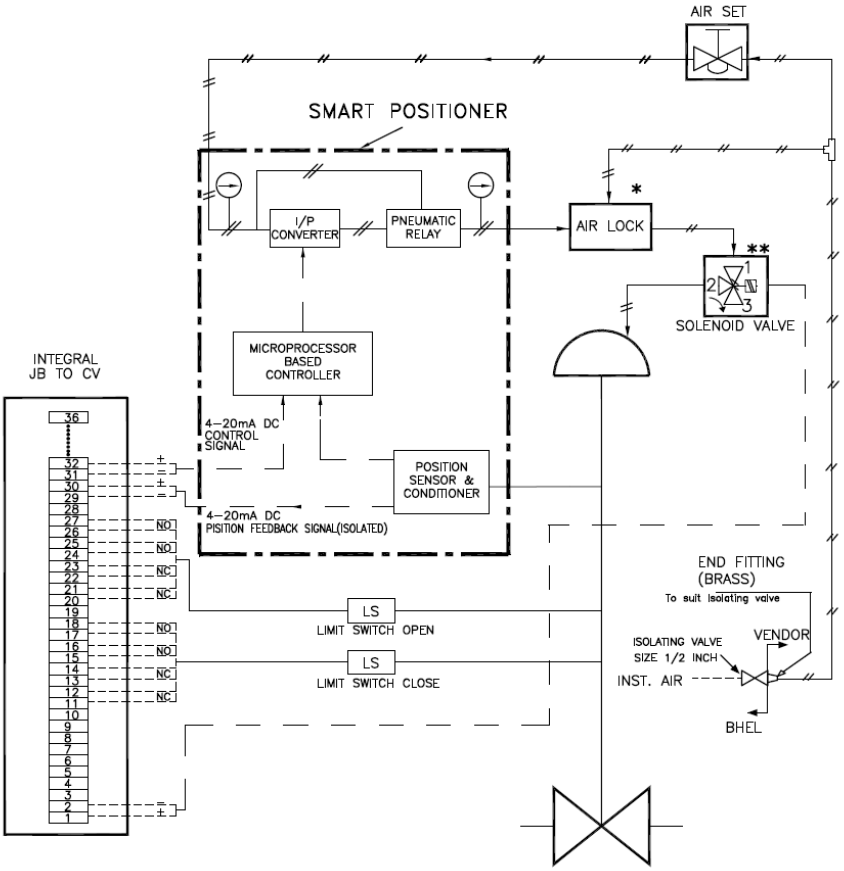

NOTE:-

1. SOLENOID VALVE WILL BE PROVIDED ONLY FOR ON/OFF DUTY VAVLVES & FOR CONTROL VALVES WHERE OPEN/CLOSE INTERLOCK IS REQUIRED AND INDICATED IN RESPECTIVE DATA SHEETS.
2. SOLENOID VALVES PORT CONDITION:
   PORT 1 & 2 SHAL BE CONNECTED UNDER DE-ENERGISED CONDITION.
   PORT 2 & 3 SHAL BE CONNECTED UNDER ENERGISED CONDITION.
3. FOR ON/OFF DUTY PNEUMATIC CONTROL VALVE,SMART POSITIONER SHALL NOT BE APPLICABLE.
4. JB TERMINALS SHALL BE CAGE CLAMP TYPE SUITABLE FOR 2.5 SQ. MM COPPER WIRE.
5. 15 METERS 1/4 " PVC COATED COPPER TUBING AND 1 SET OF FITTINGS TO BE SUPPLIED FOR EACH CONTROL VALVE FOR CONNECTION TO ISO VALVE AT INST AIR HEADER ON ONE END AND TO AIR LOCK RELAY/AIR FILTER REGULATOR ON THE OTHER END.
6. VOLUME BOOSTER IF REQUIRED SHALL BE PROVIDED.

** APPLICABLE TO VALVES WHERE OPEN/CLOSE ACTION REQUIRED ON INTERLOCK CONDITION

* APPLICABLE AS PER REQUIRED VALVE POSITION IN DATA SHEETS ON SIGNAL AIR FAILURE & Valve Position Electric Signal Failure (4-20mA).

DATA SHEET- A-1
SIZING DATA FOR AUXILIARY STEAM PRDS

SL. NO	PARAMETERS	CASE-I	CASE-II	CASE-III	CASE-IV	CASE-VIII	MECH. DESIGN
1.0	**INLET PARAMETERS TO HC-PRV & DSH (Combined) (AS-22)**						
1.1	PRESSURE (Kg/Cm^2a)	102	100	65	100	65	189.5
1.2	TEMP. (^0C)	450	500	350	500	350	545
2.0	**OUTLET PARAMETERS TO HC-PRV & DSH (Combined) (AS-22)**						
2.1	PRESSURE (Kg/Cm^2a)	18	18	18	18	18	23
2.2	TEMP. (^0C)	320	320	320*	320	320*	350
2.3	FLOW (T/HR)	**81.02**	**90.53**	**62.31**	**41.76**	**101.25**	-
3.0	**INLET OF COMMON BLOCK SPRAY CONTROL VALVE (FD-43)**						
3.1	PRESSURE (Kg/Cm^2a)	~120	100-120	100-120	100-120	100-120	321
3.2	TEMP. (^0C)	140	140	140	140	140	185
3.3	FLOW (T/HR)	Bidder to calculate					
4.0	**SPRAY WATER PRESSURE CONTROL VALVE (FD-30 / 44)**						
4.1	PARAMETERS (PRESSURE/ TEMERATURE / FLOW) SHALL BE CALCULATED BY BIDDER						
5.0	**SPRAY WATER TEMPERATURE CONTROL VALVE (FD-28 / 31)**						
5.1	PARAMETERS (PRESSURE/ TEMERATURE / FLOW) SHALL BE CALCULATED BY BIDDER						

NOTE:

1. High capacity PRDS is combined type Pressure Reducing and Desuperheating Valve.
2. Each spray control station shall have two valves: one pressure control valve (FD-30 / FD-44) and one temp. Control valve (FD-28 / FD-31).
3. Pressure downstream of pressure control valve (shall be ~80 kg/cm2(a) & spray control system shall be sized accordingly
4. Case-VIII is the capability check point for AS-22. Case-II is the capability check point for Spray Water control valves.
5. High capacity steam pressure reducing valve (AS-22) min. flow at 10% valve lift shall correspond to the passing capability of low capacity steam pressure reducing valve (AS-26) at 95% valve list (refer datasheet A-2).

6. Valve shall be capable to pass min. 110 TPH flow at 123.53kg/cm2(a) pressure and 537 Deg C temperature.
7. Pressure D/S of AS-22 may be selected considering pressure drop in DESH-1, such that pressure D/S of DESH-1 is 18 kg/cm2(a).

* If Desuperheater outlet temperature is less than 320 Deg C (without spray), same is to be indicated by the bidder.

DATA SHEET- A-2
SIZING DATA FOR AUXILIARY STEAM PRDS (PRV (AS-26))

S.NO	PARAMETERS	CASE-V (A)	CASE-V (B)	CASE-V (C)	CASE-VI	CASE-VII (A)	CASE-VII (B)	MECH. DESIGN
1.0	**INLET PARAMETERS OF PRV (AS-26)**							
1.1	PRESSURE (Kg/Cm^{2}a)	18	18	44.89	44.89	18	18	55.0
1.2	TEMP. (^{0}C)	305	338	336.3	336.3	305	338	360
2.0	**OUTLET PARAMETERS OF PRV (AS-26)**							
2.1	PRESSURE (Kg/Cm^{2}a)	16	16	18	18	16	16	23
2.2	FLOW (T/HR)	1.70	1.66	1.70	29.1	5.80	5.76	-

NOTE:

1. Case-VI is the capability check point for pressure reducing valve.
2. Valve selected shall be suitable for passing 47.6 tph at 45 kg/cm2(a) pressure and 337 Deg C temperature.
3. High capacity steam pressure reducing valve (AS-22) min. flow at 10% valve lift shall correspond to the passing capability of low capacity steam pressure reducing valve (AS-26) at 95% valve list (refer datasheet A-1).
4. Pressure D/S of AS-26 may be selected considering pressure drop in DESH-1, such that pressure D/S of DESH-1 is 18 kg/cm2(a). (except for case-V(A), V(B) and VII(A), VII(B))

DATA SHEET- A-3
SIZING DATA FOR AUXILIARY STEAM PRDS ((DESH-1A/1B) & SPRAY CONTROL VALVES (FD-35 & 46 / FD-38 & 47)

Sl. No.	PARAMETERS	CASE -I	CASE-II	CASE-IV (A)	CASE-IV (B)	CASE-V (A)	CASE-V (B)	CASE-VII(A)	CASE-VII(B)	CASE-VIII	MECH. DESIGN
1.0	**PARAMETERS AT DESUPERHEATER INLET (DESH-1)**										
1.1	PRESSURE (Kg/Cm^2a)	18	18	18	18	16	16	16	16	18	23
1.2	TEMP. (^0C)	320	320	301.8	320	302.6	336	302.6	336	301.8	350
1.3	FLOW (T/HR)	Bidder to calculate									
2.0	**PARAMETERS AT DESUPERHEATER OUTLET (DESH-1)**										
2.1	PRESSURE (Kg/Cm^2a)	18	18	18	18	16	16	16	16	18	18
2.2	TEMP. (^0C)	240	240	240	240	240	240	240	240	240	270
2.2	FLOW (T/HR)	**67.60**	**67.60**	**35.90**	**35.90**	**1.50**	**1.50**	**1.50**	**1.50**	**77.90**	-
3.0	**COMMON BLOCK SPRAY CONTROL VALVE (FD-43)**										
3.1	PRESSURE (Kg/Cm^2a)	~80	~80	100-120	100-120	100-120	100-120	100-120	210	100-120	321
3.2	TEMP. (^0C)	140	140	140	140	140	140	140	165	140	185
3.3	FLOW (T/HR)	Bidder to calculate									
4.0	**SPRAY WATER PRESSURE CONTROL VALVE (FD-35 / 38)**										
4.1	PARAMETERS (PRESSURE/ TEMERATURE / FLOW) SHALL BE CALCULATED BY BIDDER										
5.0	**SPRAY WATER TEMPERATURE CONTROL VALVE (FD-46 / 47)**										
5.1	PARAMETERS (PRESSURE/ TEMERATURE / FLOW) SHALL BE CALCULATED BY BIDDER										

NOTE:

1. Vendor to ensure the D/S pressure of DESH-1 shall be 18 $Kg/Cm^{2.}$ (except for case-V and VII)
2. Each spray control station shall have two valves: one pressure control valve (FD-35 / FD-38) and one temp. Control valve (FD-46 / FD-47).
3. Pressure downstream of pressure control valve (shall be ~80 kg/cm2(a) & spray control system shall be sized accordingly
4. For Case-V & VII, DESH-1 inlet & outlet is based on outlet pressure of AS-26.

SECTION – D

EQUIPMENT SPECIFICATIONS

SECTION – D

EQUIPMENT SPECIFICATIONS FOR CONTROL VALVE WITH PNEUMATIC ACTUATOR

1.0 SCOPE

This specification covers the Design, Manufacture, Inspection and Testing at the manufacturer's works, proper packing for transportation and delivery to site of Control valve (with Pneumatic/Electric Actuator) for use in Utility/Captive Power Station/Combined Cycle Station.

2.0 CODES AND STANDARDS

2.1 All the equipments specified herein shall comply with the requirements of the latest issue of the relevant National and International standards.

2.2 The Design and Materials used for the components shall also comply with the relevant National and International standards.

2.3 As a minimum requirement, the following standards shall be complied with :

Indian Boiler Regulation (IBR)

Allowable Seat leakage	:	ANSI-B16.104 / FCI-70.2
Pressure & Temperature ratings	:	ANSI-B16.34
Enclosure class	:	IEC-144 / NEMA / IS-13947
Control Valves	:	ISA S-75
Electric Motor operated Actuators	:	IS-9334

3.0 TECHNICAL REQUIREMENTS

The Control valve, Actuator and the accessories shall be suitable for continuous operation under an ambient temperature of 0-55°C and Relative Humidity of 0-95% unless specified otherwise in volume IIB Section-B or Section-C.

3.1 Control Valve

The control valve shall be suitably designed for the operating conditions and system characteristics as specified in the Data Sheet-A.

3.1.1 The control valve shall be of globe body design with single port. The valve trim, shall be suitable for quick removal without any cutting or welding.

3.1.2 The material of body, internals and packing shall be as specified in the data sheets. Alternatives, considered more suitable for service specified may be given as alternative offer, along with adequate justification. However main offer shall totally meet specification requirements. Asbestos shall not be used for the packing or any other component.

3.1.3 The valve bonnet and packing shall be suitable for the service conditions as in Data Sheet-A. Gland sealed type bonnets are not acceptable. Double packing is mandatory for applications involving vacuum service. Bonnets having teflon packing shall have valve stem finished to 2-4 microns. Packing material requiring lubrication will not be acceptable. Justification for proper selection of bonnet & packing shall be furnished in the bid.

3.1.4 The valve end connection as specified in Data Sheet-A shall conform to ANSI B16.25 for Butt Weld connection and ANSI B16.5 for flanged ends. End to end dimension shall be as per ANSI 16.10.

3.1.5 The valve seat leakage shall be as per ANSI B16.104 / FCI-70.2. The leakage class shall be as per Data Sheet-A.

3.1.6 The valve body shall have the direction of flow embossed on all valves.

3.1.7 The sizing shall conform to the requirements of ANSI/ISA(S75- 01), and the valve capacity shall be selected so as to meet the following:

Valve with Linear characteristic.	-	Normal Flow (Design Point)	:	70-75% valve lift.
	-	Max. Flow	:	90% valve lift.
	-	Min. Flow	:	>10% valve lift.
Valve with Equipercentage Characteristic	-	Normal Flow (Design Point)	:	75-85% valve lift.
	-	Max. Flow	:	90% valve lift.
	-	Min. Flow	:	>10% valve lift.
ON/OFF Quick open Characteristic	-	1.1 times the CV calculated on the basis of maximum flow condition.		

3.1.8 Calculation for valve sizing, velocity and noise shall be subject to purchaser's approval during contract stage. However responsibility of proper selection and design for the duties specified lies with the vendor. Any modifications required to be done on the valves or actuators & accessories to achieve satisfactory performance of the control system shall be done without any commercial implication.

3.1.9 Suitable justification and evidence shall be furnished regarding proper selection of the valve.

3.1.10 The valve outlet velocities shall be limited to the following values, unless otherwise specified in the Data sheet-A.

i) Liquid service <= 7 Metres/Sec.
ii) Steam service <= 1/3 Sonic velocity in the flow medium.

3.1.11 For flashing duty, the trim design shall be such that the vapour bubbles are kept away from valve body.

3.1.12 For cavitation service, the trim design shall be of multistage pressure drop type, so as to avoid cavitation altogether, instead of keeping cavitation away from valve parts.

3.1.13 In case of predicted noise level above 85 dBA, suitable low noise trim or inbuilt diffusers shall be provided to bring down the noise level below 85dBA.

3.1.14 The equivalent weighted sound level measured at 1.5M. above floor level in elevation and one metre horizontally from the control valve expressed in decibels to a reference of 0.0002 microbar shall not exceed 85 dBA (without pipe insulation). The offer shall include noise prediction calculations for each valve.

3.1.15 In case of wrong selection/mal operation of valve and for associated actuator during guarantee period, the vendor shall replace the valve suitably with a modified/new valve of design as approved by purchaser and all the expenses for replacement, rectification/modification including transportation both ways will be at vendor's expenses.

3.2 Pneumatic Actuator

The pneumatic actuators shall be employed for modulating or open/close duty, as specified in Data Sheet-A. The bidder shall be responsible for proper selection and sizing of valve actuators in accordance with the pressure drops and shut off pressure.

3.2.1 The pneumatic spring opposed diaphragm actuator for modulating duty shall be capable of positioning the associated valve at desired opening for all the operating conditions specified.

3.2.2 The pneumatic actuator for open/close duty shall be suitable for fast opening/closing of the associated valve.

3.2.3 The actuator design shall allow valve assembly to be mounted at 45° inclination on either side in the vertical plane.

3.2.4 The actuators shall be suitably sized to ensure that the associated valve travel time from full open to full closed position and vice versa is less than 20 seconds under the most stringent service conditions.

3.2.5 The actuator shall be painted with epoxy based paint.

3.3 Accessories for Control valve with Pneumatic Actuator

The bidder shall offer all the accessories as specified in the Data Sheet - A for the Pneumatic Actuators under modulating or OPEN/CLOSE duty. The accessories specified shall be supplied duly mounted on the valve actuator and piped with PVC covered copper tube and flare less brass fittings (Refer typical hook up diagram in sheet 12 of 12).

3.3.1 Hand wheel

Hand wheel shall have OPEN & CLOSE direction marking and clockwise rotation as viewed from front shall close the valve. The hand wheel shall have a circular stainless steel plate with Tag number and service.

3.3.2 Local Position Indicator

Each actuator shall be provided with a mechanical pointer attached to stem, moving over a graduated scale with markings, for OPEN, 25%, 50%, 75%, CLOSE positions.

3.3.3 Position Transmitter

The position transmitter shall be supplied as indicated in Data Sheet-A. The electronic position transmitter shall be non-contact type with 4-20 mA DC 2-wire output suitable for 12-50V DC supply. The resistance type position transmitter shall have 0-100 ohm variation for valve position change of 0-100%. The position transmitters of both types shall have accuracy and enclosure class. Necessary cable glands shall be supplied.

3.3.4 Air Filter Regulator

Instrument quality air at suitable pressure of 5.5 Kg/Cm2(g) to 7 Kg/Cm2(g) shall be supplied to each valve through air filter regulator. The filter regulator shall include an inbuilt blow-down valve,

5 micron size filter. The design pressure for regulator shall be 7 Kg/cm2g. The Air filter regulator shall be selected to meet the requirements of positioner/actuator, E/P convertor and air-lock. The flow capacity of the Air filter regulator shall be variable with a knob. Output gauge shall be provided wherever pneumatic positioner is not specified for the valve.

3.3.5 Air Lock Relay

Air lock relay shall retain the valve position stayput, in case of air supply failure and shall reset automatically on resumption of air supply. Air lock shall have a threaded plug for evacuating diaphragm air if required for local manual operation.

3.3.6 Solenoid Valves

Solenoid valves are meant for interlock & protection purposes overriding the controller signal, and/or to result stayput action on controller signal failure. The Solenoid valve shall be 3-way Universal type and the valve internals shall be of stainless steel. The coil shall have class-H insulation and rated for continuous AC/DC duty as specified in Data sheet-A. The enclosure shall be to IP-55. Cable gland shall be provided for cable entry. The solenoid shall in general conform to IS-8935. The solenoid operation shall be universal type. The solenoid shall be suitable for 24V DC supply, unless specified otherwise in Data Sheet-A.

3.3.7 Limit Switches

Limit switches are required as specified in the data sheet-A. Each limit switch shall have 2NO+2NC contacts with contact rating of 5A at 240V AC/0.2A at 220V DC unless otherwise specified. The switch enclosure shall conform to IP-55. Each limit switch shall be supplied with cable glands.

3.3.8 I/P Converter

I/P Converters shall preferably be of force balance type and shall produce pneumatic output signal corresponding to input current signal, also specified in Data Sheet. Convertor electronics shall be protected against reverse connection of signal polarities and a separate external connection shall be provided to facilitate grounding of instrument casing. Cable glands with neoprene gromets suitable for PVC cables shall be provided. I/P convertor shall have span adjustment facility. I/P convertor enclosure shall conform to IP-55 enclosure class.

3.3.9 Positioner

Positioner shall be suitable for accepting controller output signal 0.2-1.0 Kg/cm2, 0.2-0.6 Kg/cm2 or 0.6-1.0 Kg/cm2 as specified and give an output suitable for the actuator. Pneumatic positioner shall have 3 gauges. All gauges shall have metric scales. The positioner input signal range shall be adjustable. Wherever applicable, it shall be possible to bypass the positioner by means of a switch. Linearity and Hysterisis shall be as indicated in Data sheet-A

3.3.10 Electro pneumatic Positioner

In place of separate E/P Converter and pneumatic positioner a combined electro pneumatic positioner can also be supplied. The electro pneumatic positioner shall have 2 gauges.

3.3.11 Junction Box

Wherever specified, an integral junction box with all electrical accessories conduited up to JB shall be supplied. The junction box shall have two (2) cable glands for outgoing cables. Junction box shall have enclosure class of IP-55.

3.4 Guarantee & Performance

3.4.1 The overall performance of the control valve with pneumatic actuator assembly shall be as follows:-

i)	Hysteresis	:	± 1% of span
ii)	Linearity	:	± 2% of span
iii)	Sensitivity	:	± 0.5% of span.
iv)	Repeatability	:	± 1% of span
v)	Accuracy (Overall)	:	± 2% of span

3.4.2 The guarantee for the control valve, pneumatic actuator & accessories shall be for 12 months continuous operation from the date of commissioning, unless specified otherwise in VOL-IIB Section-B or Section-C.

3.5 Electric Actuator

The electric actuator shall be employed for modulating duty.

3.5.1 The actuator assembly shall be complete with drive motors, gears, hand wheel, signaling & switching units, associated control, integral starter, (when specified) and other accessories as required.

3.5.2 The Electric Actuator shall be capable of positioning the associated valve at the desired opening for all the operating conditions.

3.5.3 The motor shall meet the requirements of Current, torque, Axial thrust, Accelerating & stall time as imposed by the driven equipment.

3.5.4 The motor shall be suitable for direct on line starting.

3.5.5 Motors shall be suitable for inching & plugging duty operations.

3.5.6 The motors shall be capable of starting and accelerating to rated speed at 85% of rated voltage.

3.5.7 The motors shall be rated for continuous operations for modulating duty.

3.5.8 The motor shall operate satisfactorily under the following conditions:

i) ±10% supply voltage variation at rated frequency.

ii) -5% to + 3% variation in frequency at rated supply voltage.

iii) Simultaneous variation in voltage and frequency, the sum of absolute percentage not exceeding 10%.

3.5.9 The Actuator shall be suitable for mounting directly on the valve and shall be suitable for mounting in any position. Supports required for inclined mounting shall form part of supply of valve assembly.

3.5.10 The actuator shall be capable of producing the required torque and thrust at the output shaft for satisfactory operation of the associated valve.

3.5.11 Each actuator shall have a hand wheel for emergency operation. The hand wheel shall be designed such that it is declutched automatically when the power supply to the motor is restarted.

3.5.12 The hand wheel shall be so arranged that when looking from hand wheel, the valve is closed by rotating the hand wheel in clockwise direction.

3.5.13 Motor shall be totally enclosed conforming to IP-65 or better as per data sheet. The enclosure shall be suitable to protect the motor from leakage steam, water or oil from valve joints and glands.

3.5.14 Where flameproof enclosures are specified, it shall meet the specification IS-2148.

3.5.15 Insulation shall be at least class-B or better and shall be tropicalised to withstand the atmospheric condition.

3.5.16 The actuator shall be provided with antifriction bearing in grease filled cartridge.

3.5.17 Each actuator shall be provided with a mechanical position indicator to indicate accurately the valve position.

3.5.18 The integral starter, if specified in data sheet-A, shall be provided in weatherproof enclosure with protection class not less than IP-65 or better as per data sheet.

The integral starter shall consist of:

i) Mechanical & Electrically interlocked reversing contractors suitable for class AC4 duty or Thyristor as pet data sheet.

ii) Thermal overload relay.

iii) Step down control transformer with fuses.

iv) Interposing relay.

v) Monitoring relay..

vi) Open, Close & Stop push buttons.

vii) Indicating lamps.

viii) Local-Remote lockable selector switch with spare potential free contacts, wired for remote interface.

ix) A potential free contact shall be provided for remote annunciation of power failure/overload condition. The contact shall be SPDT, rated for at 5A 240V AC or 0.2A at 220V DC.

3.5.19 The actuator shall be suitably time rated for the duty cycle involved with the necessary number of starts per hour, but in no case, less than 1200 starts per hour.

3.5.20 The actuator shall be provided with a suitable control unit for receiving 4-20 mA signal from remote controller.

3.5.21 The servomotor gear should have self locking or suitable brake so as to maintain it's last position as and when the motor power is switched off.

3.5.22 Thermostat/Thermistor as specified in the data sheet shall be provided for sensing the winding temperature and giving trip command. The trip contact shall be change over type. The contact shall be wired up to the actuator terminal box.

3.6 Accessories for Control Valve with Electric Actuator

3.6.1 Torque Switches

i) Each actuator shall be provided with at least one open and one close torque switches each with 2 NO+2 NC contacts. The contacts shall be rated for 5A at 240V AC or 0.2A at 220V DC.

ii) The torque switches shall have a minimum accuracy ± 3% of set value.

iii) The torque switches shall be provided with calibrated knobs for setting desired torque. Separate knobs shall be provided for close and open torque switches.

iv) The torque switches shall be provided with mechanical latching device to prevent operation when unsealing from the positions. The latching device shall unlatch as soon as the valve leaves the end position. If such provision is not possible, the torque switches shall be bypassed by end position limit switches, which open on valve leaving end position. These limit switches are additional to the number of limit switches specified elsewhere.

v) The torque switches or worm gear shall be self-locking type so that when torque switch operates it remains operated until the actuator is operated in the reverse.

vi) The torque switch enclosure shall conform to IP-55.

3.6.2 Limit Switches

Each limit switch shall have 2NO+2NC contact with contacts rated for 5A 240V AC/0.2A 220V DC unless otherwise specified. The switch enclosure shall conform to IP-55. Each limit switch shall be supplied with cable glands.

3.6.3 Space Heater

A space heater shall be provided in limit switch and starter compartments to prevent condensation. This shall be suitable for the power supply specified in the data sheet. Where integral starters are provided the space heaters shall be wired to control supply within the actuator.

3.6.4 Remote Position Transmitter

The position transmitter shall be supplied as indicated in Data Sheet-A. The electronic position transmitter shall be non-contact type with 4-20mA DC 2-wire output suitable for 12-50V DC supply. The resistance type position transmitter shall have 0- 100 ohm variation for valve position

change of 0-100%. The position transmitters of both types shall have ± 1% accuracy. The enclosure shall conform to IP-55. Necessary cable glands shall be supplied.

3.6.5 Wiring

i) The actuator and the accessories will be neatly wired up to the terminal boxes.
ii) The internal wiring shall be minimum of 1 mm^2 stranded PVC insulated copper conductor.
iii) The wiring shall be identified by means of numbered ferrules on both ends of all wires.

3.7 Terminal and Terminal boxes

3.7.1 Motor Terminal Box

i) The terminals, terminal boards, terminal boxes, winding tails and associated equipment shall be suitable for connection to supply system having short circuit capacity specified in data sheet and clearance time determined by the associated fuses.

ii) The terminals shall be stud type insulated from the frame. The insulation shall not be porcelain. The studs shall be of brass or stainless steel or phosphor bronze of adequate size.

iii) The terminal box shall be totally enclosed conforming to degree of protection IP-65.

3.7.2 Actuator Terminal Box

i) All terminals of limit and torque switches, space heater, position transmitters, thermostat/thermister shall be brought to a common terminal box. The enclosure shall be to degree of protection IP-65.

ii) Terminal board with plug in connector shall be provided. Alternatively stud type or insertion type may be considered. Pinch screw type however will not be accepted. All terminals shall be shrouded to prevent accidental contact. Where stud type terminals are offered, it shall be as per clause 3.7.1 (ii).

iii) There shall be at least five terminals spare to terminate spare cores of cable.

3.7.3 Cable Glands

The motor terminal box and actuator terminal box shall be provided with required number of double compression nickel plated brass cable glands to suit cable type and associated size.

3.7.4 Earthing Terminal

Two earthing terminal shall be provided on either side of motor and actuator terminal box.

3.7.5 Painting

The Actuator shall be painted with epoxy-based paint.

4.0 TESTING AND INSPECTION

4.1 The bidder shall adopt suitable quality assurance plan to ensure that the equipments offered will meet the specification requirements in full.

4.2 The bidder shall furnish the Quality Plan in the format enclosed in volume-III. In case the Quality Plan(s) is/are included in volume-IIB, the bidder shall furnish his Quality Plan strictly in line with the same. The Quality Plan shall be discussed and finalised with the technically accepted bidders before opening the price bid. The stages where purchaser would like to be associated for witnessing or verification of tests would be indicated by the purchaser in the Quality Plan before approval.

4.3 The following test shall be conducted as a minimum requirement.

4.3.1 Control Valve

i) Radiographic tests on castings.
ii) Dye penetrant tests on machined surface.
iii) Ultrasonic tests for the forgings & bars of all valves with 60 Kg/cm^2 & higher ratings.
iv) Hydrostatic tests as per ANSI B 16.34 prior to seat leakage tests.
v) Valve closure and seat leakage tests as per ANSI B 16.104 / FCI-70.2.

4.3.2 Pneumatic Actuators

Functional test of actuator and each accessory.

4.3.3 Electric Actuator

i) Routine tests on motors as per IS: 325.
ii) Functional test on actuator and each accessory.
iii) Insulation resistance and high voltage test.
iv) Stall current & Stall torque test.
v) Output shaft speed and torque of actuator and corresponding current tests.

4.3.4 Control valve with Actuator & Accessories fully assembled

i) Functional tests of control valve operation along with actuator & accessories.
ii) Dimension checks.

4.3.5 Type tests or Test Reports

i) Valve lift vs. Flow test (Cv Test)
ii) Degree of protection tests for the enclosures
ii) Temperature rise test (applicable for Electrical Actuator only).
iii) Type test for motor as per IS: 325.

4.4 Inspection will be conducted by BHEL and/or their authorised representatives as per the agreed inspection schedule. The inspection schedule will be submitted by the bidder, for BHEL's approval at contract stage. The cost of all tests and inspections will be deemed to have been included in the bid. For all the type tests covered under 4.3.5 above, "Type Test Certificates" as per agreed Quality Plan shall be furnished. In the absence of the same, such Type Tests shall be arranged at the Vendor's works in the presence of BHEL and/or their authorised representatives or in independent Test House/Laboratory approved by BHEL.

4.5 The Standard QP is included in this specification to enable bidder to understand the extent of inspection and testing requirements to execute this job. The successful bidder has to follow the agreed QP, taking care of customer requirements mentioned in Sec-C and submit QP for final approval by BHEL / Customer.

5.0 SPARES AND CONSUMABLES

5.1 Commissioning Spares and consumables

As part of the main equipment supply, the bidder shall supply all commissioning spares and consumables required during Start-up,

5.2 Mandatory Spares

The bidder shall offer along with main offer, the Mandatory Spares as specified in Volume IIB Section-C of the specification. The Mandatory Spares offered shall be of the same make and type as the main equipment.

5.3 Recommended Spares

The bidder shall furnish a list of Recommended Spares along with the normal service expectancy period and frequency of replacement; quantities recommended for 3 years operation along with unit rate against each item to enable BHEL / BHEL's Customer to place a separate order later, if required.

5.4 Special Tools & Tackles

The bidder shall furnish a list of Special Tools & Tackles included in the bid.

6.0 DRAWINGS AND DOCUMENTS

6.1 The bidder shall furnish the following documents in required number of copies along with the bid:

6.1.1 Data sheet-B, completely filled-up along with all enclosures.

6.1.2 Wiring diagrams for Electrical Actuators.

6.1.3 Hook up diagrams of Control Valve with Actuator & accessories.

6.1.4 Valve & actuator assembly dimensional drawings with weights.

6.1.5 Quality Plan

6.1.6 All relevant Catalogs with detailed technical information.

6.1.7 Bar-chart to indicate the time schedule for procurement, manufacture, testing and despatch.

6.2 The successful bidder shall furnish the following documents in required number of copies to BHEL during the contract stage:

6.2.1 For approval

i) Dimensional drawings.

ii) Installation drawings with overall dimensions of the completed equipment and clearances for operation and maintenance.

iii) Data sheet-C, completely filled-up along with all the enclosures including the sizing calculations & noise calculations.

iv) Quality Plan.

v) Test Certificates.

6.2.2 Final / As-built Drawings

Final / As-built drawings / CDs in required number of copies shall be submitted.

6.3 Operation & Maintenance Manuals

O&M Manuals in required number of copies shall be submitted. O&M manuals shall also contain storage and commissioning instructions.

7.0 MARKING AND PACKING

7.1 Marking

A stainless steel metal nameplate should be permanently fixed on each equipment giving its tag number and technical specifications.

7.2 Packing

All equipment / materials shall be suitably packed and protected for the entire period of dispatch, storage and erection against impact, abrasion, corrosion, incidental damage due to vermin, sunlight, high temperature, rain, moisture, humidity, dust, sea water spray (where applicable) as well as rough handling and delays in transit and storage in open.

8.0 APPLICABLE DATA SHEET FORMS

This document shall be read with one or more of the following data sheet forms :

- Data sheet A&B for Control Valve with Pneumatic Actuator : Data sheet no. PES-145-06-DS1-1
- Data sheet C for Control Valve with Pneumatic Actuator : Data sheet no. PES-145-06-DS2-1
- Data sheet A&B for Control Valve with Electric Actuator : Data sheet no. PES-145-06-DS3-1
- Data sheet C for Control Valve with Electric Actuator : Data sheet no. PES-145-06-DS4-1

SPECIFICATION FOR MICROPROCESSOR BASED ELECTRONIC POSITIONER (SMART)

1.0 Electrical :

Input Signal	4-20mA
Power Supply	Loop Powered from the output card of Control System (12-30 V DC)
Hart Protocol	Compatibility for Remote Calibration & Diagnostic (Super-Imposed HART Signal on Input Signal to positioner (4-20mA)
Valve Position Feedback	4-20mA output signal for Position Feedback is to be provided to control system.

2.0 Environment :

Operating Temperature	(-) 30 To 80 Deg.C
Humidity	0-95%
Protection Class	IP-65 (Minimum)

3.0 Diagnostic Features :

Diagnostic / Test Features (to be available in Smart Positioner and shall be accessible through any HMS software)	**Minimum Diagnostic Features Like** • Measurement of Valve positioning timing, • Detection of actuator leakage, • Display of fault alarm. • Logging of alarms and history. • Valve friction/jamming detection. • Detection of valve wear & tear, • Valve stroke length and timing.
	Advanced Diagnostic Features Like (OPTIONAL, if specified in customer's specification) • On line partial closure test. • Valve signature analysis (online graphical/tabular representation of input signal Vs valve travel). • Step response test.

4.0 Software :

Software (to be supplied alongwith smart positioner)	• Windows based software to meet the requirement for configuration, diagnostics, calibration and testing of Valve and actuator. • Easily up-gradable with same hardware and compatible with any Hart Management Systems (HMS). • Shall be capable to cater to all the tags in the specification at the same time.

5.0 Hardware :

Hardware (As required)	1. PC with software for configuring and accessing diagnostic features of the positioners.
	2. Multiplexers for interfacing smart positioner with PC.
	3. Communication cable for interconnecting multiplexers with PC.
	4. RS232/RS485 converter (if required)

Note : Power supply for Multiplexer shall be arranged by the owner.

6.0 Valve Action :

Valve Action	**Direct & Reverse.** (Same positioner for Single Acting or Double Acting And no separate relays required for changing from Single acting to double).
	During Failure of input Electrical signal (4-20 mA), valve to attain fail Freeze position without any external hardware. (Sol valve, Power Supply etc.)

7.0 Flow Characterization :

Flow Characterization	Possible to fit valve characteristic curve linear & Equal percentage

8.0 Performance:

Characteristic Deviation	<=0.75% of span
Ambient temp effect	<=0.01%/Deg C or better.
Dead Band	Adjustable 0.1 to 10%.
Scan Time	10ms
Resolution	<=0.05%
Sensitivity/Linearity	0.3-0.4% of FS
Repeatability	0.32% of FS

9.0 Test Certificates:

Test Certificates/Test Reports for degree of protection, Accuracy and calibration test (as a minimum) to be submitted as per Manufacture Standard / Relevant Standard.

10.0 EMC & CE compliance

International Standard Like EN/IEC. To EN 50081-2 & EN 50082 or equivalent

11.0 Accessories

In Built Operator Panel	Display with push buttons for Configuration and display on the positioner itself
Hand Held Hart Calibrator (Optional)	Universal Hart Calibrator To Be Provided, One Per Unit.
Press Gauge Block	For Supply & Output Pr., Filter Regulator Other Accessories Shall Be Provided As per Control valve hook-up diagram.
Electrical cable entry	½ - NPT, side or bottom entry to avoid water Ingress.

DATA SHEETS- A&B
FOR CONTROL VALVES

Tag No. :…AS-22… Qty.: …1 per Unit … Date Sheet No. PES-145-06-DS1-0

DATA SHEET – A & B

DATA SHEET – A FOR CONTROL VALVE (WITH PNEUMATIC ACTUATOR) (TO BE FILLED BY PURCHASER)			DATA SHEET – B (TO BE FILLED UP BY BIDDER)
GENERAL*	PROJECT SERVICE LOCATION DUTY PIPE SIZE (inlet / outlet) PIPE MATERIAL (inlet / outlet)	1x500 MW FGUTPP-IV STPP MAIN STEAM TO AUX. PRDS (HCPRDS) [■] INDOOR [] OUTDOOR [] ON/OFF [■] MODULATING 219.1 x 40 | 355.6 x 62 SA 335 P22 | SA 335 P22	…… …… …… …… …… ……|……
BODY*	MODEL NO. TYPE OF BODY: GUIDING : NO. OF PORTS BODY SIZE: PORT SIZE: DESIGN CV END CONNECTION & RATING (ANSI) BODY MATERIAL PACKING: MATERIAL SINGLE / DOUBLE BONNET TYPE TRIM FORM TRIM MATERIAL: SEAT | PLUG : CAGE | GUIDE BUSH FLOW OUTLET VELOCITY REQUIRED LEAKAGE CLASS NOISE LEVEL (dBA) (spec. 3.1.14) VACUUM SERVICE ANTI CAVITATION TRIM	[■] GLOBE [] ANGLE | [] TOP [■] CAGE | ONE [■] BWE [] SWE [] FLANGED [] A216 WCB [■] A217 WC9 [] SS [] A217 CS [] A351 CF8M [] PTFE [■] GRAFOIL [] DOUBLE [■] SINGLE [] STD [] EXTENDED [] FINNED [] LINEAR [■] EQ. PERCENTAGE [] QUICK OPEN (ON/OFF) SS 316 STELLITED | SS 316 STELLITED SS 316 STELLITED | SS 316 STELLITED [] BELOW SEAT [] ABOVE SEAT [] < 7 M/SEC(WATER) [■] MAC NO. < 1/3(STM) [] II [] III [] IV [■] V [] VI LESS THAN 85 dBA [] YES [■] NO [] YES [■] NO	…… ……|……|……|…… ……|……|…… …… …… …… ……|…… …… …… ……|…… ……|…… …… …… …… …… …… ……
PNEUMATIC ACTUATOR	MODEL NO. & SIZE CLOSE AT : OPEN AT (KG/CM2g) *TRAVEL TIME FOR OPEN TO CLOSE, CLOSE TO OPEN *VALVE POSN. ON SIGNAL AIR FAILURE *VALVE POSN. ON SUPPLY AIR FAILURE	| | [] TO OPEN [] STAYPUT [■] TO CLOSE [■] STAYPUT	……|…… ……|…… …… …… …… ……
ACCESSORIES	POSITIONER (SMART) AIR FILTER REGULATOR AIR LOCK RELAY POSITION LIMIT SWITCH POSITION TRANSMITTER SOLENOID VALVE E/P CONVERTER JUNCTION BOX HAND WHEEL (SIDE MOUNTED) LOCAL POSITION INDICATOR ELECTRO PNEUMATIC POSITIONER	[■] REQUIRED [] NOT REQUIRED [■] REQUIRED [] NOT REQUIRED [■] REQUIRED [] NOT REQUIRED [■] REQUIRED [] NOT REQUIRED [■] REQUIRED [] NOT REQUIRED [] REQUIRED [■] NOT REQUIRED [■] REQUIRED [] NOT REQUIRED [■] REQUIRED [] NOT REQUIRED [■] REQUIRED [■] REQUIRED [] REQUIRED [■] NOT REQUIRED	…… …… …… …… …… …… …… …… …… …… ……

Tag No. :…AS-22… Qty.: …1 per Unit … Date Sheet No. PES-145-06-DS1-0

DATA SHEET – A & B

DATA SHEET – A FOR CONTROL VALVE (WITH PNEUMATIC ACTUATOR) (TO BE FILLED BY PURCHASER)			DATA SHEET – B (TO BE FILLED UP BY BIDDER)
PERFORMANCE OF VALVE	LINEARITY HYSTERISIS SENSITIVITY ACCURACY (OVERALL)	± 1% ± 1% ± 0.5% ± 2%	…… …… …… ……

SERVICE CONDITION*	SL. No. +	LOAD	FLOW (T/HR)	INLET PR. KG/CM2(A)	OUTLET PR. KG/CM2(A)	TEMP DEG (C)	CALC ULATED CV	% VLV LIFT	VLV O/L VELOCITY
	Refer Sizing Data Sheet A-1 for Aux. Steam PRDS								

VALVE TYPE	[] CAVITATION [] FLASHING [■] HIGH DP
* MAX SHUT OFF PRESS (KG/CM2g) 188.5 * BODY DESIGN : PRESS (KG/CM2g) | TEMP (DEG C) 188.5 | 545 * IBR FORM III-C [■] REQUIRED [] NOT REQUIRED	…… ……|…… ……
TOTAL WEIGHT (VALVE + ACTUATOR + ACCESSORIES) Kg	……

Tag No. :…AS-26… Qty.: …1 per Unit … Date Sheet No. PES-145-06-DS1-0

DATA SHEET – A & B

DATA SHEET – A FOR CONTROL VALVE (WITH PNEUMATIC ACTUATOR) (TO BE FILLED BY PURCHASER)			DATA SHEET – B (TO BE FILLED UP BY BIDDER)
GENERAL*	PROJECT SERVICE LOCATION DUTY PIPE SIZE (inlet / outlet) PIPE MATERIAL (inlet / outlet)	1x500 MW FGUTPP-IV STPP CRH STEAM TO AUX. PRDS (LCPRV) [■] INDOOR [] OUTDOOR [] ON/OFF [■] MODULATING 114.3 x 6.02 | 168.3 x 7.11 SA 106 GrB | SA 106 GrB	…… …… …… …… …… ……|……
BODY*	MODEL NO. TYPE OF BODY: GUIDING : NO. OF PORTS BODY SIZE: PORT SIZE: DESIGN CV END CONNECTION & RATING (ANSI) BODY MATERIAL PACKING: MATERIAL SINGLE / DOUBLE BONNET TYPE TRIM FORM TRIM MATERIAL: SEAT | PLUG : CAGE | GUIDE BUSH FLOW OUTLET VELOCITY REQUIRED LEAKAGE CLASS NOISE LEVEL (dBA) (spec. 3.1.14) VACUUM SERVICE ANTI CAVITATION TRIM	[■] GLOBE [] ANGLE | [] TOP [■] CAGE | ONE [■] BWE [] SWE [] FLANGED [] A216 WCB [■] A217 WC9 [] SS [] A217 CS [] A351 CF8M [] PTFE [■] GRAFOIL [] DOUBLE [■] SINGLE [] STD [] EXTENDED [] FINNED [] LINEAR [■] EQ. PERCENTAGE [] QUICK OPEN (ON/OFF) SS 316 STELLITED | SS 316 STELLITED SS 316 STELLITED | SS 316 STELLITED [] BELOW SEAT [] ABOVE SEAT [] < 7 M/SEC(WATER) [■] MAC NO. < 1/3(STM) [] II [] III [] IV [■] V [] VI LESS THAN 85 dBA [] YES [■] NO [] YES [■] NO	…… ……|……|……|…… ……|……|…… …… …… …… ……|…… …… …… ……|…… ……|…… …… …… …… …… …… ……
PNEUMATIC ACTUATOR	MODEL NO. & SIZE CLOSE AT : OPEN AT (KG/CM2g) *TRAVEL TIME FOR OPEN TO CLOSE, CLOSE TO OPEN *VALVE POSN. ON SIGNAL AIR FAILURE *VALVE POSN. ON SUPPLY AIR FAILURE	| | [■] TO OPEN [] STAYPUT [] TO CLOSE [■] STAYPUT	……|…… ……|…… …… …… …… ……
ACCESSORIES	POSITIONER (SMART) AIR FILTER REGULATOR AIR LOCK RELAY POSITION LIMIT SWITCH POSITION TRANSMITTER SOLENOID VALVE E/P CONVERTER JUNCTION BOX HAND WHEEL (SIDE MOUNTED) LOCAL POSITION INDICATOR ELECTRO PNEUMATIC POSITIONER	[■] REQUIRED [] NOT REQUIRED [■] REQUIRED [] NOT REQUIRED [■] REQUIRED [] NOT REQUIRED [■] REQUIRED [] NOT REQUIRED [■] REQUIRED [] NOT REQUIRED [] REQUIRED [■] NOT REQUIRED [■] REQUIRED [] NOT REQUIRED [■] REQUIRED [] NOT REQUIRED [■] REQUIRED [■] REQUIRED [] REQUIRED [■] NOT REQUIRED	…… …… …… …… …… …… …… …… …… …… ……

Tag No. :…AS-26… Qty.: …1 per Unit … Date Sheet No. PES-145-06-DS1-0

DATA SHEET – A & B

DATA SHEET – A FOR CONTROL VALVE (WITH PNEUMATIC ACTUATOR) (TO BE FILLED BY PURCHASER)			DATA SHEET – B (TO BE FILLED UP BY BIDDER)
PERFORMANCE OF VALVE	LINEARITY HYSTERISIS SENSITIVITY ACCURACY (OVERALL)	± 1% ± 1% ± 0.5% ± 2%	…… …… …… ……

SERVICE CONDITION*	SL. No. +	LOAD	FLOW (T/HR)	INLET PR. KG/CM2(A)	OUTLET PR. KG/CM2(A)	TEMP DEG (C)	CALC ULATED CV	% VLV LIFT	VLV O/L VELOCITY
	Refer Sizing Data Sheet A-2 for Aux. Steam PRDS								

VALVE TYPE	[] CAVITATION [] FLASHING [■] HIGH DP
* MAX SHUT OFF PRESS (KG/CM2g) 54.0 * BODY DESIGN : PRESS (KG/CM2g) | TEMP (DEG C) 54.0 | 360 * IBR FORM III-C [■] REQUIRED [] NOT REQUIRED	…… ……|…… ……
TOTAL WEIGHT (VALVE + ACTUATOR + ACCESSORIES) Kg	……

Tag No. :…FD-30 / 44… Qty.: …2 per Unit … Date Sheet No. PES-145-06-DS1-0

DATA SHEET – A & B

DATA SHEET – A FOR CONTROL VALVE (WITH PNEUMATIC ACTUATOR) (TO BE FILLED BY PURCHASER)			DATA SHEET – B (TO BE FILLED UP BY BIDDER)
GENERAL*	PROJECT SERVICE LOCATION DUTY PIPE SIZE (inlet / outlet) PIPE MATERIAL (inlet / outlet)	1x500 MW FGUTPP-IV STPP PRESS. CONTROL SPRAY VALVES - HCPRDS [■] INDOOR [] OUTDOOR [] ON/OFF [■] MODULATING 60.3 x 11.07 | 60.3 x 11.07 SA 106 GrC | SA 106 GrC	…… …… …… …… …… ……|……
BODY*	MODEL NO. TYPE OF BODY: GUIDING : NO. OF PORTS BODY SIZE: PORT SIZE: DESIGN CV END CONNECTION & RATING (ANSI) BODY MATERIAL PACKING: MATERIAL SINGLE / DOUBLE BONNET TYPE TRIM FORM TRIM MATERIAL: SEAT | PLUG : CAGE | GUIDE BUSH FLOW OUTLET VELOCITY REQUIRED LEAKAGE CLASS NOISE LEVEL (dBA) (spec. 3.1.14) VACUUM SERVICE ANTI CAVITATION TRIM	[■] GLOBE [] ANGLE | [] TOP [■] CAGE | ONE [■] BWE [] SWE [] FLANGED [] A216 WCB [■] A217 WC6 [] SS [] A217 CS [] A351 CF8M [] PTFE [■] GRAFOIL [] DOUBLE [■] SINGLE [] STD [] EXTENDED [] FINNED [] LINEAR [■] EQ. PERCENTAGE [] QUICK OPEN (ON/OFF) SS 316 STELLITED | SS 316 STELLITED SS 316 STELLITED | SS 316 STELLITED [] BELOW SEAT [] ABOVE SEAT [] < 7 M/SEC(WATER) [■] MAC NO. < 1/3(STM) [] II [] III [] IV [■] V [] VI LESS THAN 85 dBA [] YES [■] NO [■] YES [] NO	…… ……|……|……|…… ……|……|…… …… …… …… ……|…… …… …… ……|…… ……|…… …… …… …… …… …… ……
PNEUMATIC ACTUATOR	MODEL NO. & SIZE CLOSE AT : OPEN AT (KG/CM2g) *TRAVEL TIME FOR OPEN TO CLOSE, CLOSE TO OPEN *VALVE POSN. ON SIGNAL AIR FAILURE *VALVE POSN. ON SUPPLY AIR FAILURE	| | [] TO OPEN [] STAYPUT [■] TO CLOSE [■] STAYPUT	……|…… ……|…… …… …… …… ……
ACCESSORIES	POSITIONER (SMART) AIR FILTER REGULATOR AIR LOCK RELAY POSITION LIMIT SWITCH POSITION TRANSMITTER SOLENOID VALVE E/P CONVERTER JUNCTION BOX HAND WHEEL (SIDE MOUNTED) LOCAL POSITION INDICATOR ELECTRO PNEUMATIC POSITIONER	[■] REQUIRED [] NOT REQUIRED [■] REQUIRED [] NOT REQUIRED [■] REQUIRED [] NOT REQUIRED [■] REQUIRED [] NOT REQUIRED [■] REQUIRED [] NOT REQUIRED [] REQUIRED [■] NOT REQUIRED [■] REQUIRED [] NOT REQUIRED [■] REQUIRED [] NOT REQUIRED [■] REQUIRED [■] REQUIRED [] REQUIRED [■] NOT REQUIRED	…… …… …… …… …… …… …… …… …… …… ……

Tag No. :…FD-30/44… Qty.: …2 per Unit … Date Sheet No. PES-145-06-DS1-0

DATA SHEET – A & B

DATA SHEET – A FOR CONTROL VALVE (WITH PNEUMATIC ACTUATOR) (TO BE FILLED BY PURCHASER)			DATA SHEET – B (TO BE FILLED UP BY BIDDER)
PERFORMANCE OF VALVE	LINEARITY HYSTERISIS SENSITIVITY ACCURACY (OVERALL)	± 1% ± 1% ± 0.5% ± 2%	…… …… …… ……

SERVICE CONDITION*	SL. No. +	LOAD	FLOW (T/HR)	INLET PR. KG/CM2(A)	OUTLET PR. KG/CM2(A)	TEMP DEG (C)	CALC ULATED CV	% VLV LIFT	VLV O/L VELOCITY
	Refer Sizing Data Sheet A-1 for Aux. Steam PRDS								
	VALVE TYPE						[] CAVITATION [] FLASHING [■] HIGH DP		
	* MAX SHUT OFF PRESS (KG/CM2g) 320.0 * BODY DESIGN : PRESS (KG/CM2g) | TEMP (DEG C) 320 | 185 * IBR FORM III-C [■] REQUIRED [] NOT REQUIRED						…… ……|…… ……		
TOTAL WEIGHT (VALVE + ACTUATOR + ACCESSORIES) Kg							……		

Note -

1. Outlet of FD-43 shall be inlet of FD-30 / FD-44.

Tag No. :…FD-28 / 31… Qty.: …2 per Unit … Date Sheet No. PES-145-06-DS1-0

DATA SHEET – A & B

DATA SHEET – A FOR CONTROL VALVE (WITH PNEUMATIC ACTUATOR) (TO BE FILLED BY PURCHASER)			DATA SHEET – B (TO BE FILLED UP BY BIDDER)
GENERAL*	PROJECT SERVICE LOCATION DUTY PIPE SIZE (inlet / outlet) PIPE MATERIAL (inlet / outlet)	1x500 MW FGUTPP-IV STPP TEMP. CONTROL SPRAY VALVES - HCPRDS [■] INDOOR [] OUTDOOR [] ON/OFF [■] MODULATING 60.3 x 11.07 | 60.3 x 11.07 SA 106 GrC | SA 106 GrC	…… …… …… …… …… ……|……
BODY*	MODEL NO. TYPE OF BODY: GUIDING : NO. OF PORTS BODY SIZE: PORT SIZE: DESIGN CV END CONNECTION & RATING (ANSI) BODY MATERIAL PACKING: MATERIAL SINGLE / DOUBLE BONNET TYPE TRIM FORM TRIM MATERIAL: SEAT | PLUG : CAGE | GUIDE BUSH FLOW OUTLET VELOCITY REQUIRED LEAKAGE CLASS NOISE LEVEL (dBA) (spec. 3.1.14) VACUUM SERVICE ANTI CAVITATION TRIM	[■] GLOBE [] ANGLE | [] TOP [■] CAGE | ONE [■] BWE [] SWE [] FLANGED [] A216 WCB [■] A217 WC6 [] SS [] A217 CS [] A351 CF8M [] PTFE [■] GRAFOIL [] DOUBLE [■] SINGLE [] STD [] EXTENDED [] FINNED [] LINEAR [■] EQ. PERCENTAGE [] QUICK OPEN (ON/OFF) SS 316 STELLITED | SS 316 STELLITED SS 316 STELLITED | SS 316 STELLITED [] BELOW SEAT [] ABOVE SEAT [] < 7 M/SEC(WATER) [■] MAC NO. < 1/3(STM) [] II [] III [] IV [■] V [] VI LESS THAN 85 dBA [] YES [■] NO [■] YES [] NO	…… ……|……|……|…… ……|……|…… …… …… …… ……|…… …… …… ……|…… ……|…… …… …… …… …… …… ……
PNEUMATIC ACTUATOR	MODEL NO. & SIZE CLOSE AT : OPEN AT (KG/CM2g) *TRAVEL TIME FOR OPEN TO CLOSE, CLOSE TO OPEN *VALVE POSN. ON SIGNAL AIR FAILURE *VALVE POSN. ON SUPPLY AIR FAILURE	| | [] TO OPEN [] STAYPUT [■] TO CLOSE [■] STAYPUT	……|…… ……|…… …… …… …… ……
ACCESSORIES	POSITIONER (SMART) AIR FILTER REGULATOR AIR LOCK RELAY POSITION LIMIT SWITCH POSITION TRANSMITTER SOLENOID VALVE E/P CONVERTER JUNCTION BOX HAND WHEEL (SIDE MOUNTED) LOCAL POSITION INDICATOR ELECTRO PNEUMATIC POSITIONER	[■] REQUIRED [] NOT REQUIRED [■] REQUIRED [] NOT REQUIRED [■] REQUIRED [] NOT REQUIRED [■] REQUIRED [] NOT REQUIRED [■] REQUIRED [] NOT REQUIRED [] REQUIRED [■] NOT REQUIRED [■] REQUIRED [] NOT REQUIRED [■] REQUIRED [] NOT REQUIRED [■] REQUIRED [■] REQUIRED [] REQUIRED [■] NOT REQUIRED	…… …… …… …… …… …… …… …… …… …… ……

Tag No. :…FD-28/31… Qty.: …2 per Unit … Date Sheet No. PES-145-06-DS1-0

DATA SHEET – A & B

DATA SHEET – A FOR CONTROL VALVE (WITH PNEUMATIC ACTUATOR) (TO BE FILLED BY PURCHASER)			DATA SHEET – B (TO BE FILLED UP BY BIDDER)
PERFORMANCE OF VALVE	LINEARITY HYSTERISIS SENSITIVITY ACCURACY (OVERALL)	± 1% ± 1% ± 0.5% ± 2%	…… …… …… ……

SERVICE CONDITION*	SL. No. +	LOAD	FLOW (T/HR)	INLET PR. KG/CM2(A)	OUTLET PR. KG/CM2(A)	TEMP DEG (C)	CALC ULATED CV	% VLV LIFT	VLV O/L VELOCITY
	Refer Sizing Data Sheet A-1 for Aux. Steam PRDS								
	VALVE TYPE						[] CAVITATION [] FLASHING [■] HIGH DP		
	* MAX SHUT OFF PRESS (KG/CM2g) 320.0 * BODY DESIGN : PRESS (KG/CM2g) | TEMP (DEG C) 320 | 185 * IBR FORM III-C [■] REQUIRED [] NOT REQUIRED						…… ……|…… ……		
TOTAL WEIGHT (VALVE + ACTUATOR + ACCESSORIES) Kg							……		

Note -

1. Outlet of FD-30 / FD-44 shall be inlet of FD-28 / FD-31.

Tag No. :…FD-35 / 38… Qty.: …2 per Unit … Date Sheet No. PES-145-06-DS1-0

DATA SHEET – A & B

DATA SHEET – A FOR CONTROL VALVE (WITH PNEUMATIC ACTUATOR) (TO BE FILLED BY PURCHASER)			DATA SHEET – B (TO BE FILLED UP BY BIDDER)
GENERAL*	PROJECT SERVICE LOCATION DUTY PIPE SIZE (inlet / outlet) PIPE MATERIAL (inlet / outlet)	1x500 MW FGUTPP-IV STPP PRESS. CONTROL SPRAY VALVES - LCPRDS [■] INDOOR [] OUTDOOR [] ON/OFF [■] MODULATING 60.3 x 11.07 | 60.3 x 11.07 SA 106 GrC | SA 106 GrC	…… …… …… …… …… ……|……
BODY*	MODEL NO. TYPE OF BODY: GUIDING : NO. OF PORTS BODY SIZE: PORT SIZE: DESIGN CV END CONNECTION & RATING (ANSI) BODY MATERIAL PACKING: MATERIAL SINGLE / DOUBLE BONNET TYPE TRIM FORM TRIM MATERIAL: SEAT | PLUG : CAGE | GUIDE BUSH FLOW OUTLET VELOCITY REQUIRED LEAKAGE CLASS NOISE LEVEL (dBA) (spec. 3.1.14) VACUUM SERVICE ANTI CAVITATION TRIM	[■] GLOBE [] ANGLE | [] TOP [■] CAGE | ONE [■] BWE [] SWE [] FLANGED [] A216 WCB [■] A217 WC6 [] SS [] A217 CS [] A351 CF8M [] PTFE [■] GRAFOIL [] DOUBLE [■] SINGLE [] STD [] EXTENDED [] FINNED [] LINEAR [■] EQ. PERCENTAGE [] QUICK OPEN (ON/OFF) SS 316 STELLITED | SS 316 STELLITED SS 316 STELLITED | SS 316 STELLITED [] BELOW SEAT [] ABOVE SEAT [] < 7 M/SEC(WATER) [■] MAC NO. < 1/3(STM) [] II [] III [] IV [■] V [] VI LESS THAN 85 dBA [] YES [■] NO [■] YES [] NO	…… ……|……|……|…… ……|……|…… …… …… …… ……|…… …… …… ……|…… ……|…… …… …… …… …… …… ……
PNEUMATIC ACTUATOR	MODEL NO. & SIZE CLOSE AT : OPEN AT (KG/CM2g) *TRAVEL TIME FOR OPEN TO CLOSE, CLOSE TO OPEN *VALVE POSN. ON SIGNAL AIR FAILURE *VALVE POSN. ON SUPPLY AIR FAILURE	| | [■] TO OPEN [] STAYPUT [] TO CLOSE [■] STAYPUT	……|…… ……|…… …… …… …… ……
ACCESSORIES	POSITIONER (SMART) AIR FILTER REGULATOR AIR LOCK RELAY POSITION LIMIT SWITCH POSITION TRANSMITTER SOLENOID VALVE E/P CONVERTER JUNCTION BOX HAND WHEEL (SIDE MOUNTED) LOCAL POSITION INDICATOR ELECTRO PNEUMATIC POSITIONER	[■] REQUIRED [] NOT REQUIRED [■] REQUIRED [] NOT REQUIRED [■] REQUIRED [] NOT REQUIRED [■] REQUIRED [] NOT REQUIRED [■] REQUIRED [] NOT REQUIRED [] REQUIRED [■] NOT REQUIRED [■] REQUIRED [] NOT REQUIRED [■] REQUIRED [] NOT REQUIRED [■] REQUIRED [■] REQUIRED [] REQUIRED [■] NOT REQUIRED	…… …… …… …… …… …… …… …… …… …… ……

Tag No. :…FD-35/38… Qty.: …2 per Unit … Date Sheet No. PES-145-06-DS1-0

DATA SHEET – A & B

DATA SHEET – A FOR CONTROL VALVE (WITH PNEUMATIC ACTUATOR) (TO BE FILLED BY PURCHASER)			DATA SHEET – B (TO BE FILLED UP BY BIDDER)
PERFORMANCE OF VALVE	LINEARITY HYSTERISIS SENSITIVITY ACCURACY (OVERALL)	± 1% ± 1% ± 0.5% ± 2%	…… …… …… ……

SERVICE CONDITION*	SL. No. +	LOAD	FLOW (T/HR)	INLET PR. KG/CM2(A)	OUTLET PR. KG/CM2(A)	TEMP DEG (C)	CALC ULATED CV	% VLV LIFT	VLV O/L VELOCITY
	Refer Sizing Data Sheet A-3 for Aux. Steam PRDS								
	VALVE TYPE						[] CAVITATION [] FLASHING [■] HIGH DP		
	* MAX SHUT OFF PRESS (KG/CM2g) 320.0 * BODY DESIGN : PRESS (KG/CM2g) | TEMP (DEG C) 320 | 185 * IBR FORM III-C [■] REQUIRED [] NOT REQUIRED						…… ……|…… ……		
TOTAL WEIGHT (VALVE + ACTUATOR + ACCESSORIES) Kg							……		

Note -

1. Outlet of FD-43 shall be inlet of FD-35 / FD-38.

Tag No. :…FD-46 / 47… Qty.: …2 per Unit … Date Sheet No. PES-145-06-DS1-0

DATA SHEET – A & B

DATA SHEET – A FOR CONTROL VALVE (WITH PNEUMATIC ACTUATOR) (TO BE FILLED BY PURCHASER)			DATA SHEET – B (TO BE FILLED UP BY BIDDER)
GENERAL*	PROJECT SERVICE LOCATION DUTY PIPE SIZE (inlet / outlet) PIPE MATERIAL (inlet / outlet)	1x500 MW FGUTPP-IV STPP TEMP. CONTROL SPRAY VALVES - LCPRDS [■] INDOOR [] OUTDOOR [] ON/OFF [■] MODULATING 60.3 x 11.07 | 60.3 x 11.07 SA 106 GrC | SA 106 GrC	…… …… …… …… …… ……|……
BODY*	MODEL NO. TYPE OF BODY: GUIDING : NO. OF PORTS BODY SIZE: PORT SIZE: DESIGN CV END CONNECTION & RATING (ANSI) BODY MATERIAL PACKING: MATERIAL SINGLE / DOUBLE BONNET TYPE TRIM FORM TRIM MATERIAL: SEAT | PLUG : CAGE | GUIDE BUSH FLOW OUTLET VELOCITY REQUIRED LEAKAGE CLASS NOISE LEVEL (dBA) (spec. 3.1.14) VACUUM SERVICE ANTI CAVITATION TRIM	[■] GLOBE [] ANGLE | [] TOP [■] CAGE | ONE [■] BWE [] SWE [] FLANGED [] A216 WCB [■] A217 WC6 [] SS [] A217 CS [] A351 CF8M [] PTFE [■] GRAFOIL [] DOUBLE [■] SINGLE [] STD [] EXTENDED [] FINNED [] LINEAR [■] EQ. PERCENTAGE [] QUICK OPEN (ON/OFF) SS 316 STELLITED | SS 316 STELLITED SS 316 STELLITED | SS 316 STELLITED [] BELOW SEAT [] ABOVE SEAT [] < 7 M/SEC(WATER) [■] MAC NO. < 1/3(STM) [] II [] III [] IV [■] V [] VI LESS THAN 85 dBA [] YES [■] NO [■] YES [] NO	…… ……|……|……|…… ……|……|…… …… …… …… ……|…… …… …… ……|…… ……|…… …… …… …… …… …… ……
PNEUMATIC ACTUATOR	MODEL NO. & SIZE CLOSE AT : OPEN AT (KG/CM2g) *TRAVEL TIME FOR OPEN TO CLOSE, CLOSE TO OPEN *VALVE POSN. ON SIGNAL AIR FAILURE *VALVE POSN. ON SUPPLY AIR FAILURE	| | [■] TO OPEN [] STAYPUT [] TO CLOSE [■] STAYPUT	……|…… ……|…… …… …… …… ……
ACCESSORIES	POSITIONER (SMART) AIR FILTER REGULATOR AIR LOCK RELAY POSITION LIMIT SWITCH POSITION TRANSMITTER SOLENOID VALVE E/P CONVERTER JUNCTION BOX HAND WHEEL (SIDE MOUNTED) LOCAL POSITION INDICATOR ELECTRO PNEUMATIC POSITIONER	[■] REQUIRED [] NOT REQUIRED [■] REQUIRED [] NOT REQUIRED [■] REQUIRED [] NOT REQUIRED [■] REQUIRED [] NOT REQUIRED [■] REQUIRED [] NOT REQUIRED [] REQUIRED [■] NOT REQUIRED [■] REQUIRED [] NOT REQUIRED [■] REQUIRED [] NOT REQUIRED [■] REQUIRED [■] REQUIRED [] REQUIRED [■] NOT REQUIRED	…… …… …… …… …… …… …… …… …… …… ……

Tag No. :…FD-46/47… Qty.: …2 per Unit … Date Sheet No. PES-145-06-DS1-0

DATA SHEET – A & B

DATA SHEET – A FOR CONTROL VALVE (WITH PNEUMATIC ACTUATOR) (TO BE FILLED BY PURCHASER)			DATA SHEET – B (TO BE FILLED UP BY BIDDER)
PERFORMANCE OF VALVE	LINEARITY HYSTERISIS SENSITIVITY ACCURACY (OVERALL)	± 1% ± 1% ± 0.5% ± 2%	…… …… …… ……

SERVICE CONDITION*	SL. No. +	LOAD	FLOW (T/HR)	INLET PR. KG/CM2(A)	OUTLET PR. KG/CM2(A)	TEMP DEG (C)	CALC ULATED CV	% VLV LIFT	VLV O/L VELOCITY
	Refer Sizing Data Sheet A-3 for Aux. Steam PRDS								
	VALVE TYPE						[] CAVITATION [] FLASHING [■] HIGH DP		
	* MAX SHUT OFF PRESS (KG/CM2g) 320.0 * BODY DESIGN : PRESS (KG/CM2g) | TEMP (DEG C) 320 | 185 * IBR FORM III-C [■] REQUIRED [] NOT REQUIRED						…… ……|…… ……		
TOTAL WEIGHT (VALVE + ACTUATOR + ACCESSORIES) Kg							……		

Note -

1. Outlet of FD-35 / FD-38 shall be inlet of FD-46 / FD-47.

Tag No. :…FD-43… Qty.: …1 per Unit … Date Sheet No. PES-145-06-DS1-0

DATA SHEET – A & B

DATA SHEET – A FOR CONTROL VALVE (WITH PNEUMATIC ACTUATOR) (TO BE FILLED BY PURCHASER)			DATA SHEET – B (TO BE FILLED UP BY BIDDER)
GENERAL*	PROJECT SERVICE LOCATION DUTY PIPE SIZE (inlet / outlet) PIPE MATERIAL (inlet / outlet)	1x500 MW FGUTPP-IV STPP BLOCK VALVES FOR APRDS SPRAY LINE [■] INDOOR [] OUTDOOR [■] ON/OFF [] MODULATING 60.3 x 11.07 | 60.3 x 11.07 SA 106 GrC | SA 106 GrC	…… …… …… …… …… ……|……
BODY*	MODEL NO. TYPE OF BODY: GUIDING : NO. OF PORTS BODY SIZE: PORT SIZE: DESIGN CV END CONNECTION & RATING (ANSI) BODY MATERIAL PACKING: MATERIAL SINGLE / DOUBLE BONNET TYPE TRIM FORM TRIM MATERIAL: SEAT | PLUG : CAGE | GUIDE BUSH FLOW OUTLET VELOCITY REQUIRED LEAKAGE CLASS NOISE LEVEL (dBA) (spec. 3.1.14) VACUUM SERVICE ANTI CAVITATION TRIM	[■] GLOBE [] ANGLE | [] TOP [■] CAGE | ONE [■] BWE [] SWE [] FLANGED [] A216 WCB [■] A217 WC6 [] SS [] A217 CS [] A351 CF8M [] PTFE [■] GRAFOIL [] DOUBLE [■] SINGLE [] STD [] EXTENDED [] FINNED [] LINEAR [] EQ. PERCENTAGE [■] QUICK OPEN (ON/OFF) SS 316 STELLITED | SS 316 STELLITED SS 316 STELLITED | SS 316 STELLITED [] BELOW SEAT [] ABOVE SEAT [] < 7 M/SEC(WATER) [■] MAC NO. < 1/3(STM) [] II [] III [] IV [■] V [] VI LESS THAN 85 dBA [] YES [■] NO [■] YES [] NO	…… ……|……|……|…… ……|……|…… …… …… …… ……|…… …… …… ……|…… ……|…… …… …… …… …… …… ……
PNEUMATIC ACTUATOR	MODEL NO. & SIZE CLOSE AT : OPEN AT (KG/CM2g) *TRAVEL TIME FOR OPEN TO CLOSE, CLOSE TO OPEN *VALVE POSN. ON SIGNAL AIR FAILURE *VALVE POSN. ON SUPPLY AIR FAILURE	| | [■] TO OPEN [] STAYPUT [] TO CLOSE [■] STAYPUT	……|…… ……|…… …… …… …… ……
ACCESSORIES	POSITIONER (SMART) AIR FILTER REGULATOR AIR LOCK RELAY POSITION LIMIT SWITCH POSITION TRANSMITTER SOLENOID VALVE E/P CONVERTER JUNCTION BOX HAND WHEEL (SIDE MOUNTED) LOCAL POSITION INDICATOR ELECTRO PNEUMATIC POSITIONER	[■] REQUIRED [] NOT REQUIRED [■] REQUIRED [] NOT REQUIRED [■] REQUIRED [] NOT REQUIRED [■] REQUIRED [] NOT REQUIRED [■] REQUIRED [] NOT REQUIRED [] REQUIRED [■] NOT REQUIRED [■] REQUIRED [] NOT REQUIRED [■] REQUIRED [] NOT REQUIRED [■] REQUIRED [■] REQUIRED [] REQUIRED [■] NOT REQUIRED	…… …… …… …… …… …… …… …… …… …… ……

Tag No. :…FD-43… Qty.: …1 per Unit … Date Sheet No. PES-145-06-DS1-0

DATA SHEET – A & B

DATA SHEET – A FOR CONTROL VALVE (WITH PNEUMATIC ACTUATOR) (TO BE FILLED BY PURCHASER)			DATA SHEET – B (TO BE FILLED UP BY BIDDER)
PERFORMANCE OF VALVE	LINEARITY HYSTERISIS SENSITIVITY ACCURACY (OVERALL)	± 1% ± 1% ± 0.5% ± 2%	…… …… …… ……

SERVICE CONDITION*	SL. No. +	LOAD	FLOW (T/HR)	INLET PR. KG/CM2(A)	OUTLET PR. KG/CM2(A)	TEMP DEG (C)	CALC ULATED CV	% VLV LIFT	VLV O/L VELOCITY
	Refer Sizing Data Sheet A-1 and A-3 for Aux. Steam PRDS								
	VALVE TYPE						[] CAVITATION [] FLASHING [■] HIGH DP		
	* MAX SHUT OFF PRESS (KG/CM2g) 320.0 * BODY DESIGN : PRESS (KG/CM2g) | TEMP (DEG C) 320 | 185 * IBR FORM III-C [■] REQUIRED [] NOT REQUIRED						……. ……|…… ……		
TOTAL WEIGHT (VALVE + ACTUATOR + ACCESSORIES) Kg							……		

Note -

1. Flow FD-43 shall be based on total flow requirement for HCPRDS and LCPRDS together.
2. Outlet of FD-43 shall be inlet of FD-30 / FD-44 (for HCPRDS) and FD-35 / FD-38 (for LCPRDS).

Tag No……. Quantity……. Data Sheet No. PES-145-06-DS1-1

APPLICABLE FOR TAG Nos.WHEREVER STATEMENT "REQUIRED" INDICATED IN THE INDIVIDUAL CV DATA SHEETS

DATA SHEET – A& B for ACCESSORIES

DATA SHEET – A FOR CONTROL VALVE (WITH PNEUMATIC ACTUATOR) (TO BE FILLED BY PURCHASER)							DATA SHEET – B (TO BE FILLED-UP BY BIDDER)
POSITIONER (SMART) WITH HART PROTOCOL	MFR. & MODEL NUMBER			Bidder To Specify			
	BYPASS	GAUGES	ENCL. CLASS	☐ YES ■ NO	☐ THREE ■ TWO	■ IP-65	
	INPUT SIGNAL (Kg / Cm^2)			■ 0.2 – 1.0 ☐ 0.2 – 0.6 ☐ 0.6 – 1.0			
	OUTPUT SIGNAL (Kg / Cm^2)			TO SUIT ACTUATOR			
AIR FILTER REGULATOR TWO (2) Nos. PER CV	MFR. & MODEL NUMBER			Bidder To Specify			
	AIR SUPPLY PRESS (Kg / Cm^2 g)			■ 7.0			
	OUTPUT PRESS (Kg / Cm^2 g)			TO SUIT ACTUATOR			
	FILTER SIZE			5 MICRON			
	OUTPUT GAUGE			■ REQUIRED ☐ NOT REQUIRED			
AIR LOCK	MFR. & MODEL NUMBER			Bidder To Specify			
	SET PRESS (Kg / Cm^2)			Bidder To Specify			
	SUPPLY PRESS (Kg / Cm^2)			■ 7.0			
	RESET TYPE			AUTO			
	VENT PLUG			REQUIRED			
	ENCLOSURE CLASS			■ IP 65			
LIMIT SWITCH	MFR. & MODEL NUMBER			Bidder To Specify			
	OPEN posn	INT posn	CLOSE posn	**1 NO.**	---	**1 NO.**	
	CONTACT TYPE			SPDT 2 NO + 2 NC			
	RATING (AC / DC)			5A 240V AC AND 0.2A 220V DC			
	ENCLOSURE CLASS			■ IP 55 ☐			
POSITION TRANSMITTER (PART OF POSITIONER)	MFR. & MODEL NUMBER			**PART OF POSITIONER**			
	TYPE						
	SUPPLY						
	OUTPUT RATING						
	ACCURACY						
	ENCLOSURE CLASS						
SOLENOID VALVE	MFR. & MODEL NUMBER			Bidder To Specify			
	RATING			■ 24V DC ☐ 220V DC ☐ 240V AC ☐			
	TYPE			3-WAY (UNIVERSAL OPERATION TYPE)			
	OPERATION	QUANTITY		☐ Stayput ■ Interlock	■ 1 ☐ 2		
	COIL INSULATION CLASS			CLASS - H			
	ENCLOSURE CLASS			■ IP 65			
HANDWHEEL	ORIENTATION			☐ TOP MOUNTED ■ SIDE MOUNTED			
JUNCTION BOX	NO. OF WAYS			☐ 24-WAYS ☐ AS REQUIRED ■ 36-Ways			
	SIZE			AS REQUIRED			
	CABLE GLANDS (Size / Quantity)			AS REQUIRED (Double Compression Type).			
	ENCLOSURE CLASS			■ IP 65			
I/P CONVERTER (PART OF POSITIONER)	INPUT SIGNAL	POWER SUPPLY		**PART OF POSITIONER**			
	SPLIT RANGE						
	ENCLOSURE CLASS						
	LINEARITY						
	HYSTERISIS						
Cu. Tubing & Fittings / per CV	**This is in addition to cu. Tubing and fittings which are integral part of CV**			15 Meters of ¼ " PVC coated Cu. Tubing, with 1 set of Fittings for each CV for connection to IA Header on one end and accessories on another end of CV.			
						COMPANY SEAL	SIGNATURE
						NAME	DATE

SECTION – D

EQUIPMENT SPECIFICATIONS FOR STEAM DESUPERHEATER

1.0.0 GENERAL

This standard specification covers the design, materials, construction features, manufacturing process, assembly, inspection and testing requirements, painting and packing requirements of Steam Desuperheater along with spray nozzle.

2.0.0 CODES AND STANDARDS

2.1.0 The design, manufacture, inspection and testing of the equipment shall comply with the requirements of the latest national and international codes and standards wherever applicable. Wherever the specific code requirements are specified herein,. the same shall be adhered to.

In particular, the equipment shall be designed to comply with latest editions of the following standards

(i) Indian Boiler Regulations (IBR).

(ii) ASME Section - VIII / Div. - 1.

(iii) Material specifications as per ASTM, AISI.

3.0.0 DESIGN AND CONSTRUCTIONAL FEATURES

3.1.0 The desuperheater shall be of direct mixing mechanical spray type. The assembly shall consist of desuperheater pipe with steam inlet and outlet & spray water connection along with spray nozzle. The spray nozzle shall direct the spray in the direction of steam flow for proper mixing and arranged in such position that direct impingement of spray water on desuperheater walls is avoided.

3.2.0 The spray nozzle shall be accurately sized for best results in total range as stipulated in the data sheet.

3.3.0 The desuperheater shall be complete with matching counter flanges including bolts, nuts, gaskets, necessary reducers / expanders to suit purchaser's pipeline and supporting legs / pads & holding down bolts as required.

3.4.0 The material of construction shall be as indicated in Data Sheet – A-4.

4.0.0 SHOP INSPECTION AND TEST

4.1.0 The bidder shall submit along with the offer the Quality Plans in the enclosed format together with all reference documents/standards etc. as applicable.

4.2.0 Indicative Quality Plans, specifying minimum checks and tests as considered necessary are enclosed along with this specification for compliance. These however are not intended to exhibit the total comprehensive testing programmes, which are the responsibility of the bidder.

4.3.0 Detailed Quality Plans to be submitted by the bidders should also include all the checks/tests carried out by the suppliers as part of their normal practice. The Quality Plans submitted by the bidders shall be subject to approval of BHEL/their Customer who reserves the right to ask for further checks during finalization of Quality Plans. BHEL/their Customer shall indicate customer hold points in the approved Quality Plans beyond which the work shall not proceed without their approval.

4.4.0 The supplier shall furnish their production program along with scheduled dates of testing at least three months in advance to enable BHEL/their customer to plan for witnessing the tests identified as hold points.

4.5.0 Material identification and co-relation with test certificates for all major components shall be essentially required. In absence of these, the material of each component shall be tested as per relevant specification for Chemical Composition and Mechanical properties i.e. Yield Stress, Ultimate Tensile Stress, Impact test, % Elongation, % Reduction in Area, Hardness etc. In addition, to ensure freedom from surface and sub-surface defects, suitable Non Destructive Testing shall also be carried out.

4.6.0 Following tests shall be done at Manufacturers' works during various stages as minimum requirement :

4.6.1 Visual examination of all components.

4.6.2 Check for weld joints for proper fit up, Dye Penetration Test after root run and final welding. 100% Radiographic test as per ASTM E 165 for all butt welds.

4.6.3 Verification of stress relieving chart if post-weld heat treatment is called for.

4.6.4 Check / test for pressure retaining bolts and nuts as per relevant Codes/Standards.

4.6.5 Dimension check for all components including surface finish.

4.6.6 Hydraulic Test to two times the rated design pressure for desuperheater body and other pressure retaining parts.

4.6.7 Check for final completeness, cleaning, surface finish, appearance, identification, surface preparation, painting, marking and packing including spares.

4.6.8 The equipment comes under the purview of IBR (Indian Boiler Regulations). All tests certificates duly signed by Chief Inspector (IBR) / authorized representative shall be furnished in IBR from III-C.

4.6.9 The particulars of proposed shop tests and process of test shall be submitted to BHEL/their Customer along with Quality Plan for approval.

5.0.0 PERFORMANCE REQUIREMENTS

Bidder shall guarantee that equipment offered shall meet the rating and performance requirements as stipulated in this specification. In case it is not as per guarantee furnished by the bidder, the deficiency shall be made good by the bidder by rectification / replacement of defective parts within reasonable time at their own cost inclusive of cost of transportation both ways if required. The Purchaser is entitled to reject the equipment in case of repeated failures to meet the guaranteed performance.

6.0.0 PAINTING

6.1.0 All foundry sand and loose material shall be removed and surface should be made thoroughly clean for further protection as required.

6.2.0 A shop coat of paint, removable after installation at site, shall be applied to all steel surfaces and other exposed surfaces requiring corrosion protection during transit and storage at site.

7.0..0 PRESERVATION, MARKING AND PACKING

7.1.0 A Stainless Steel metal nameplate should be permanently fixed on each equipment giving its Tag. No. and technical specifications i.e. Service, Size, Pressure Rating etc.

7.2.0 All equipments / materials shall be packed suitably and protected from impact, abrasion, corrosion, incidental damage due to vermin, Sun-light, high temperature, rain, moisture, humidity, dust, sea water (where applicable) as well as rough handling during entire period of dispatch, storage and erection including delays in transit and storage in open.

7.3.0 Spares shall be packed separately and marked clearly for identification. These shall be specially packed for long storage without damage.

DESUPERHEATER DATA SHEET A-4A

DATA SHEET FOR LOW TEMP. DESUPERHEATER DESH-1A (OPTION-1)

S.NO.	DESCRIPTION	UNITS	DATA FOR LOW TEMPERATURE PRDS DESUPERHEATER
1.0	TAG NO.		DESH-1
2.0	TYPE	VARIABLE ORIFICE / VENTURI TYPE	
3.0	STEAM PARAMETERS	(INLET OF DESUPERHEATER)	
3.1	FLOW	T/HR	REFER SIZING DATA SHEET A-3
3.2	PRESSURE	$Kg/cm^2(a)$	BIDDER TO DECIIDE BASED ON SIZING DATA
3.3	TEMPERATURE	^0C	BIDDER TO DECIIDE BASED ON SIZING DATA
4.0	STEAM PARAMETERS (OUTLET OF DESUPERHEATER)		REFER SIZING DATA SHEET A-3
5.0	SPRAY WATER PARAMETERS		(INLET OF DESUPERHEATER)
5.1	FLOW	T/HR	REFER SIZING DATA SHEET A-3
5.2	PRESSURE	Kg/cm^2 (a)	BIDDER TO DECIIDE BASED ON SIZING DATA
5.3	TEMPERATURE	^0C	REFER SIZING DATA SHEET A-3
6.0	END DETAILS	(STEAM INLET / OUTLET)	
6.1	TYPE / MATCHING PIPE	mm x mm	BW / 323.9 x 9.53
7.0	END DETAILS	(SPRAY WATER INLET)	
7.1	TYPE / MATCHING PIPE		SW/ 60.3 x 11.07
8.0	MATERIALS OF CONSTRUCTION		
8.1	BODY		A217 WCB
8.2	PIPE		SA 106GRB
8.3	SPRAY NOZZLE WITH ASSEMBLY		SS 316 (Spray Nozzle design pressure shall be equal to Design Spray Water Pressure)
9.0	DESIGN PARAMETERS		
9.1	DESIGN PRESSURE	$Kg/cm^2(g)$	22
9.2	DESIGN TEMPERATURE	^0C	350
10.0	HYDRO TEST PRESSURE	$Kg/cm^2(g)$	1.5 TIMES DESIGN PRESSURE

DESUPERHEATER DATA SHEET A-4B

DATA SHEET FOR LOW TEMP. DESUPERHEATER DESH-1B (OPTION-2)

S.NO.	DESCRIPTION	UNITS	DATA FOR LOW TEMPERATURE PRDS DESUPERHEATER
1.0	TAG NO.		DESH-1
2.0	TYPE	VARIABLE ORIFICE / VENTURI TYPE	
3.0	STEAM PARAMETERS	(INLET OF DESUPERHEATER)	
3.1	FLOW	T/HR	REFER SIZING DATA SHEET A-3
3.2	PRESSURE	$Kg/cm^2(a)$	BIDDER TO DECIIDE BASED ON SIZING DATA
3.3	TEMPERATURE	^0C	BIDDER TO DECIIDE BASED ON SIZING DATA
4.0	STEAM PARAMETERS (OUTLET OF DESUPERHEATER)		REFER SIZING DATA SHEET A-3
5.0	SPRAY WATER PARAMETERS		(INLET OF DESUPERHEATER)
5.1	FLOW	T/HR	REFER SIZING DATA SHEET A-3
5.2	PRESSURE	Kg/cm^2 (a)	BIDDER TO DECIIDE BASED ON SIZING DATA
5.3	TEMPERATURE	^0C	REFER SIZING DATA SHEET A-3
6.0	END DETAILS	(STEAM INLET / OUTLET)	
6.1	TYPE / MATCHING PIPE	mm x mm	BW / 273 x 6.35
7.0	END DETAILS	(SPRAY WATER INLET)	
7.1	TYPE / MATCHING PIPE		SW/ 60.3 x 11.07
8.0	MATERIALS OF CONSTRUCTION		
8.1	BODY		A217 WCB
8.2	PIPE		SA 106GRB
8.3	SPRAY NOZZLE WITH ASSEMBLY		SS 316 (Spray Nozzle design pressure shall be equal to Design Spray Water Pressure)
9.0	DESIGN PARAMETERS		
9.1	DESIGN PRESSURE	$Kg/cm^2(g)$	22
9.2	DESIGN TEMPERATURE	^0C	350
10.0	HYDRO TEST PRESSURE	$Kg/cm^2(g)$	1.5 TIMES DESIGN PRESSURE

DATA SHEET-C

LIST OF DOCUMENTS AND DATA TO BE SUBMITTED AFTER AWARD OF CONTRACT

The list of documents and data to be submitted by the successful bidder after the award of the contract are specified in Data Sheet - C.

The supplier shall after award of contract submit Four (04) sets of the following documents for purchaser's approval / vetting.

i) Certified final drawings & data sheets as indicated in section-C.
ii) Quality Plans, Inspection/Test Reports as agreed with the Purchaser.
iii) Material and Hydraulic Test Certificates along with IBR form III C.
iv) Performance Test Procedures and Reports.
v) Field Quality Plan as agreed.
vi) Storage Instructions.
vii) List of Commissioning, Mandatory and Recommended Spares.
viii) List of Tools and Tackles required.
ix) List of lubricants.
x) Operation and Maintenance Instruction Manual.

NOTE: Above list is only tentative. Successful bidder shall prepare detailed schedule of Drawings/ Documents, which shall be mutually agreed and included in the contract document/ordering Specification.

QUALITY PLAN

	STANDARD QUALITY PLAN FOR AUXILIARY STEAM PRDS	CUSTOMER : NTPC	PROJECT: 1x500 MW FGUTPP-IV	SPECIFICATION NUMBR **PE-TS-401-142-N101**
		BIDDER/ VENDOR : AS PER APPROVED LIST	SPECIFICATION TITLE : **AUXILIARY STEAM P.R.D.S**	
	SHEET 1 of 2	SYSTEM ITEM : **STEAM DESUPERHEATER**	QUALITY PLAN NUMBR	SECTION VOLUME

SL. NO.	COMPONENT/ OPERATION	CHARACT-ERISTIC CHECK	CAT.	TYPE METHOD OF CHECK	EXTENT OF CHECK	REFERENCE DOCUMENT	ACCEPTANCE NORM	FORMAT OF RECORD	AGENCY			REMARKS
									P	W	V	
1	2	3	4	5	6	7	8	9	10			11
1.0	**Raw Materials**											
1.1	Pipes	Mechanical & Chemical Prop.		Mechanical & Chemical	100%	Appd Specn./ Data Sheet/Drg.	Appd Specn./ Data Sheet/Drg.	TC	3/2	-	1	Correlation required
		Leakproofness		Hydraulic test	100%	-do-	-do-	TC	3/2	-	1	
		Dimensions		Measurement	100%	-do-	-do-	IR	3/2	-	1	
1.2	Forging	Physical & Chemical Prop.		Physical & Chemical Prop.	1/heat	Appd Specn./ Data Sheet/Drg.	Appd Specn./ Data Sheet/Drg.	TC	3/2	-	1	Correlation required
		Dimensions		Measurement	100%	-do-	-do-	IR	3/2	-	1	
		Heat Treatment		Scrutiny	100%	-do-	-do-	HT/SR Chart	3/2	-	1	Correlation required
2.0	**In Process**											
2.1	Forgings	Internal defects		U.T	100%	ASTMA 435	ASTMA 435	IR	3/2	-	1	
2.2	Machining Body Internals	Dimensions		Measurement	100%	Appd.Drg.	Appd.Drg.	IR	3/2	-	1	Correlation required
2.3	Body	Surface Defects		D.P. Check	100%	ASTME165	ASTM-D-12964	TC	3/2	-	1	

PARTICULARS	CUSTOMER / EPC CONTRACTOR	BHEL	BIDDER / VENDOR	
NAME				
SIGNATURE				
DATE				BIDDER'S/ VENDOR'S COMPANY SEALS

	STANDARD QUALITY PLAN FOR AUXILIARY STEAM PRDS	CUSTOMER : NTPC	PROJECT: 1x500 MW FGUTPP-IV	SPECIFICATION NUMBR **PE-TS-401-142-N101**
		BIDDER/ VENDOR : AS PER APPROVED LIST	SPECIFICATION TITLE : **AUXILIARY STEAM P.R.D.S**	
	SHEET 2 of 2	SYSTEM ITEM : **STEAM DESUPERHEATER**	QUALITY PLAN NUMBR	SECTION VOLUME

SL. NO.	COMPONENT/ OPERATION	CHARACT-ERISTIC CHECK	CAT.	TYPE METHOD OF CHECK	EXTENT OF CHECK	REFERENCE DOCUMENT	ACCEPTANCE NORM	FORMAT OF RECORD	AGENCY			REMARKS
									P	W	V	
1	2	3	4	5	6	7	8	9	10			11
2.4	WPS,PQR,WPQ	WPS,PQR,WPQ		Physical	100%	ASME Sec-IX/IBR	ASMESec-IX/IBR	Format	3/2	-	1	Records to be shown
3.0	**Final Inspection**											
3.1	Assembly	Completeness and Marking		Visual	100%	Appd Specn./Data Sheet/Drg.	Appd Specn./Data Sheet/Drg.	IR	3/2	1	-	
		Dimensional		Measurement	100%	Appd Specn./Data Sheet/Drg.	Appd Specn./Data Sheet/Drg.	IR	3/2	1	-	
3.2	Pressure Test	Leak Proofness		Hydraulic Test	100%	-do-	-do-	IR	3/2	1	-	
4.0	**Painting**	Surface Prepn., Uniformity, Shade & Thick.		Visual, Measurement	100%	-do-	-do-	IR	3/2	-	1	
5.0	**Packing**	Soundness of Packing, Marking		Visual	100%	Appd Specn./Mfr. Standard	Appd Specn./Mfr. Standard	IR	3/2	-	1	
	Note:: IBR –Certificate in Form III C shall be submitted.											

LEGEND P – PERFORM W – WITNESS V – VERIFICATION
1 – BHEL, CUSTOMER/CONSULTANT 2 – VENDOR 3 – SUB VENDOR

PARTICULARS	CUSTOMER / EPC CONTRACTOR	BHEL	BIDDER / VENDOR	
NAME				
SIGNATURE				
DATE				BIDDER'S/ VENDOR'S COMPANY SEALS

PEM :: C&I	STANDARD QUALITY PLAN FOR CONTROL VALVE (PNEUMATIC)	QUALITY PLAN NO.: **PE-QP-999-145-I 006**
		VOLUME IIB
		SECTION D
		REV. NO. 06 DATE: 05.09.2013
		SHEET 1 OF 7

Sl. No.	Component / operation	Characteristics Checked	* Category	Type/Method of Check	Extent of Check	Reference documents	Acceptance Norms	Format of Records	Agency $ P	Agency $ W	Agency $ V	Remarks
1.0	**MATERIAL**											
1.1	Body & Bonnet casting / forgings, plug, valve stem, seat ring/cage.	1. Physical, Chemical properties	MA	Physical, Chemical tests	One/ Heat(HT Batch)	Approved drg. / data sheet / BHEL specn.	Approved drg. / data sheet / BHEL specn.	Test Certificate	3	---	2,1	
		2. Heat Treatment	MA	Review of H.T. Chart	Each H.T.	Approved drg. / data sheet / BHEL specn.	Approved drg. / data sheet / BHEL specn.	Test Certificate	3/2	2	1	IBR Certification (if applicable) to be verified by BHEL
		3. Internal quality of castings	MA	RT for Body & UT for Bonnet(NDT)	100%	ASME B 16.34	ASME B 16.34	Test Report / FILM	3/2	2	1	Only for rating ANSI 900 and above. Applicable for Body and Bonnet only. For Lower rating only if called for in specification.
		4. Surface Quality	MA	1. Visual	100%	MSS-SP-55	MSS-SP-55	Test Certificate	3/2	---	2,1	
				2. MT/PT	100%	ASME B 16.34	ASME B 16.34	Test Certificate	3	2	1	After Machining on machined surface only

LEGEND:
* CR - Critical characteristics
MA - Major characteristics
MI - Minor characteristics

RT- Radiographic Test
UT – Ultrasonic Test

PT – Dye penetrant Test
MT- Magnetic Test

$ P - Agency Performing the Test.
W - Agency Witnessing the Test.
V - Agency Verifying the Test.

1 - BHEL
2 - Vendor
3 - Sub-vendor

Sl. No.	Component / operation	Characteristics Checked	* Category	Type/Method of Check	Extent of Check	Reference documents	Acceptance Norms	Format of Records	Agency $			Remarks
									P	W	V	
		5. Pressure test for shell	MA	Hyd. Test	100%	ISA-S-75.19/ ASME B 16.34	ISA-S-75.19/ ASME B 16.34	Test Certificate	2	2	1	For Body & Bonnet after machining
1.2	Diaphragm	1. Surface Quality	MA	Visual	100%	Mfr. standard	Mfr. standard	Test Certificate	3/2	---	2,1	
		2. Hardness	MA	Measurement	100%	Mfr. standard	Mfr. standard	Test Certificate	3/2	---	2,1	
		3. Endurance / Life cycle	MA	Cyclic test 10,000 cycles	One / Type	10,000 cycles/ Mfr. standard.	No damage	Test Certificate	3/2		2,1	
1.3	Spring	1. Composition	MA	Chemical-Analysis	One sample/ Heat	Material spec. / Mfr. standard	Material spec. / Mfr. standard	Test Certificate	3	---	2,1	
		2. Mech. Properties	MA	Mech. Test	One sample/ Heat	Material spec. / Mfr. standard	Material spec. / Mfr. standard	Test Certificate	3	---	2,1	
		3. Performance	MA	1. Stiffness ratio	100%	Material spec. / Mfr. standard	Material spec. / Mfr. standard	Test Certificate	3	---	2,1	
				2. Scragging	100%	Material spec. / Mfr. standard	Material spec. / Mfr. standard	Test Certificate	3	---	2,1	
				3. Cyclic test (Endurance)	One / type	10,000 cycles	Material spec. / Mfr. standard	Test Certificate	3	---	2,1	
				4. Dimension (Measurement)	One sample/ Lot	Mfr. standard	Appd Drg	Record	3	---	2,1	

LEGEND: * CR - Critical characteristics; MA - Major characteristics; MI - Minor characteristics

RT- Radiographic Test; UT – Ultrasonic Test; PT – Dye penetrant Test; MT- Magnetic Test

$ P - Agency Performing the Test.; W - Agency Witnessing the Test.; V - Agency Verifying the Test.

1 - BHEL; 2 - Vendor; 3 - Sub-vendor

Sl. No.	Component / operation	Characteristics Checked	* Category	Type/Method of Check	Extent of Check	Reference documents	Acceptance Norms	Format of Records	Agency $			Remarks
									P	W	V	
1.4	Electrical items [Limit switches, Solenoids, Position Transmitter(if provided externally)]	1. Routine Test	MA	HV, IR, Continuity function	100%	Rele. Standards	Rele. Standards	Test Certificate	3	---	2,1	In case TC is not available, Actual test shall be conducted
		2. Degree of protection	MA	IP/NEMA Tests	One sample / type	Approved Data sheet	Approved Data sheet	Test Certificate	3	---	2,1	
1.5	Pressure Gauges	1. Performance	MA	Review of calibration certificates	100%	Mfr. Standard	Mfr. Standard	Test Certificate	3	---	2,1	
		2. Marking	MA	Visual	100%	Mfr. standard	Mfr. standard	Records	3	---	2,1	
2.0	**IN PROCESS INSPECTION**											
2.1	After machining, i, Body ii Bonnet iii Plug iv Valve Stem v seat ring/cage	1. Surface flaws	MA	Visual & MT/PT	100% (on accessible surfaces)	ASME B 16.34	ASME B 16.34	Test Records	2	---	1	Butt weld ends shall be included.
		2. Dimensional checks	MA	Measurement	100%	Mfr. Standard	Mfr. Standard	Records	2	---	1	
		3. Hard facing (wherever applicable)	MA	Hardness Measurement	One sample/Lot	Mfr. Standard	Mfr. Standard	Records	2	---	1	
2.2	Lapping	Machining surface contact	MA	Blue Matching	One sample/lot	------	Proper Physical Contact	---	2	---	---	
3.0	**TESTS ON COMPLETED VALVE**											

LEGEND: * CR - Critical characteristics; MA - Major characteristics; MI - Minor characteristics

RT- Radiographic Test; UT – Ultrasonic Test; PT – Dye penetrant Test; MT- Magnetic Test

$ P - Agency Performing the Test.; W - Agency Witnessing the Test.; V - Agency Verifying the Test.

1 - BHEL; 2 - Vendor; 3 - Sub-vendor

Sl. No.	Component / operation	Characteristics Checked	* Category	Type/Method of Check	Extent of Check	Reference documents	Acceptance Norms	Format of Records	Agency $			Remarks
									P	W	V	
3.1	Actuator Chamber	Leakage & Strength	MA	Pneumatic test	100%	Mfr. Standard	No Leakage	Test Certificate	2	1	1	Refer Note-4
3.2	Body	Leakage and Pressure test (Body Mount Leakage)	MA	Hydro test	100%	ISA - S-75.19	No Leakage	Test Certificate	2	1	1	Refer Note-4
3.3	Seat leakage test for completed valve	Seat Leakage	MA	Pneumatic Test	100%	FCI-70.2	FCI-70.2	Test Certificate	2	1	1	Refer Note-4
4.0	**OPERATION TEST ON COMPLETED VALVE (Final inspection)**	1. Valve Travel	MA	Measurement	100%	Approved drg. / data sheet	Approved drg. / data sheet	Test Report	2	1	1	Refer Note-4
		2. Opening/Closing time	MA	Measurement	100%	Approved drg. / data sheet	Approved drg. / data sheet	Test Report	2	1	1	Refer Note-4
		3. Linearity/cam characteristic	MA	Measurement	100%	Approved drg. / data sheet	Approved drg. / data sheet	Test Report	2	1	1	Refer Note-4
		4. Repeatability	MA	Measurement	100%	Approved drg. / data sheet	Approved drg. / data sheet	Test Report	2	1	1	Refer Note-4
		5. Hysteresis	MA	Measurement	100%	Approved drg. / data sheet	Approved drg. / data sheet	Test Report	2	1	1	Refer Note-4
		6. Sensitivity	MA	Measurement	100%	Approved drg. / data sheet	Approved drg. / data sheet	Test Report	2	1	1	Refer Note-4
		7. Accuracy (Overall)	MA	Measurement	100%	Approved drg. / data sheet	Approved drg. / data sheet	Test Report	2	1	1	Refer Note-4
		8. Control Valve characteristics / CV Test	MA	♦Measurement (Press. vs. discharge and discharge vs. opening 0-100% in steps of 10%)	One per type	As per specs/ Approved drg. / data sheet	As per specs/ Approved drg. / data sheet	Test Certificate	2	--	1	♦Size = Body & port size Or Body size & CV for non std port. Refer Note 1.

LEGEND: * CR - Critical characteristics; MA - Major characteristics; MI - Minor characteristics

RT- Radiographic Test; UT – Ultrasonic Test; PT – Dye penetrant Test; MT- Magnetic Test

$ P - Agency Performing the Test.; W - Agency Witnessing the Test.; V - Agency Verifying the Test.

1 - BHEL; 2 - Vendor; 3 - Sub-vendor

Sl. No.	Component / operation	Characteristics Checked	* Category	Type/Method of Check	Extent of Check	Reference documents	Acceptance Norms	Format of Records	Agency $ P	W	V	Remarks
		9. Operation of limit switch & solenoids and other accessories	MA	Function	100%	Approved drg. / data sheet	As per specs/ Approved drg. / data sheet	Test Report	2	1	1	On assembled valve Refer Note-4
		10. Overall dimensions	MI	Visual and dimensional	100%	Approved drg. / data sheet	As per specs/ Approved drg. / data sheet	Records	2	1	1	Refer Note-4
		11. Pre defined valve position in case of air failure	MA	Visual	100%	As per spec & Appd drg	As per spec & Appd drg	Test Certificate	2	1	1	
		12. Cleanliness, painting, stamping (for direction of flow), Tag No.	MA	Visual and dimensional	100%	Approved drg. / data sheet	As per specs/ Approved drg. / data sheet	Test Certificate	2	1	1	
5.0	**AUXILIARY ITEMS (Performance test of auxiliary items shall be performed on the completely assembled valve)**											
5.1	Positioner	Overall leakage after assembly including Nozzles leakage	MA	Leak Test (in the steady state input signal)	100 %	Mfr. Standard	No leakage	Test Certificate	3/2	---	1	Overall leakage including tubing
5.2	Air filter regulator	1. Normal air consumption	MA	Measurement	Each type	Mfr. Standard	No leakage	Test Certificate	3/2	---	1	
		2. Overall leakage	MA	Visual (soap solution)	100 %	Mfr. Standard	No leakage	Test Certificate	3/2	---	1	
5.3	Air lock relay	Performance Test	MA	Leakage test	100%	Mfr. Standard	No leakage	Test Certificate	3/2	---	1	
5.4	Electronic position transmitter(not applicable if provided integral to smart positioner)	1. Accuracy	MA	Operation	100%	Approved data sheet /	Approved data sheet /	Test Certificate	2	1	1	

LEGEND: * CR - Critical characteristics; MA - Major characteristics; MI - Minor characteristics

RT- Radiographic Test; UT – Ultrasonic Test; PT – Dye penetrant Test; MT- Magnetic Test

$ P - Agency Performing the Test.; W - Agency Witnessing the Test.; V - Agency Verifying the Test.

1 - BHEL; 2 - Vendor; 3 - Sub-vendor

Sl. No.	Component / operation	Characteristics Checked	* Category	Type/Method of Check	Extent of Check	Reference documents	Acceptance Norms	Format of Records	Agency $ P	Agency $ W	Agency $ V	Remarks
5.5	Current to Pneumatic converter(not applicable for smart positioner)	1. Physical Verification Make/Model	MA	Visual	100%	Approved drg. / data sheet	Approved drg. / data sheet	Test Certificate	2	---	2,1	
		2. Degree of Protection	MA	IP/NEMA test	Each type	Relevant Standard	Relevant Standard	Test Certificate	3	---	2,1	
		3. Linearity	CR	Measurement	100%	Approved drg. / data sheet / BHEL specn.	Approved drg. / data sheet / BHEL specn.	Inspection Report	2	---	1	
		4. Hysterisis	CR	Measurement	100%	Approved drg. / data sheet / BHEL specn.	Approved drg. / data sheet / BHEL specn.	Inspection Report	2	---	1	
5.6	Smart Positioner (As Applicable)	1. Physical Verification Make/Model	MA	Visual	100%	Approved drg. / data sheet	Approved drg. / data sheet	Test Certificate	2	---	2,1	
		2. Degree of Protection	MA	IP/NEMA test	Each type	Relevant Standard	Relevant Standard	Test Certificate	3	---	2,1	
		3. Linearity	CR	Measurement	100%	Approved drg. / data sheet / BHEL specn.	Approved drg. / data sheet / BHEL specn.	Inspection Report	2	---	1	
		4. Hysterisis	CR	Measurement	100%	Approved drg. / data sheet / BHEL specn.	Approved drg. / data sheet / BHEL specn.	Inspection Report	2	---	1	
		5. Calibration with Hand Held Communicator	MA	Measurement	Each type	Approved data sheet / Mfr. Standard	Approved data sheet / Mfr. Standard	Test Certificate	2	1	1	
6.0	**PAINTING**	Soundness of Painting	MA	Visual and Measurement	100%	BHEL specn. / Mfr. Standard	BHEL specn. / Mfr. Standard	Inspection Report	2	---	---	Refer Note-2
7.0	**PACKING**	Soundness of Packing against transit damage	MA	Visual	100%	Mfr. Standard	Mfr. Standard	Inspection Report	2	---	---	Refer Note-3

LEGEND: * CR - Critical characteristics; MA - Major characteristics; MI - Minor characteristics

RT- Radiographic Test; UT – Ultrasonic Test; PT – Dye penetrant Test; MT- Magnetic Test

$ P - Agency Performing the Test.; W - Agency Witnessing the Test.; V - Agency Verifying the Test.

1 - BHEL; 2 - Vendor; 3 - Sub-vendor

Sl. No.	Component / operation	Characteristics Checked	* Category	Type/Method of Check	Extent of Check	Reference documents	Acceptance Norms	Format of Records	Agency $			Remarks
									P	W	V	

NOTES:

1. In case valid CV test certificate for a similar control valve(Same type, Same size, Same CV) is not submitted to BHEL by the vendor, CV test shall be conducted at FCRI/Any govt. approved laboratory/ BHEL approved Laboratory.
2. In the absence of BHEL spec. for painting, vendor to obtain BHEL's approval on their painting specification / procedure.
3. Sea worthy packing shall be provided, if applicable.
4. The quantum of check shall be 100% for manufacturer and 10% for BHEL/BHEL nominated inspection agency.
5. IBR certificates in Form III-C shall be submitted if called for in the specification/datasheet.
6. Copies of all TC's(Test Certificates) for materials duly correlated with Heat Nos., TC's for electrical items and mechanical tests(Leak/Operation) shall be submitted to BHEL for verification and acceptance.

TENDER DRAWINGS

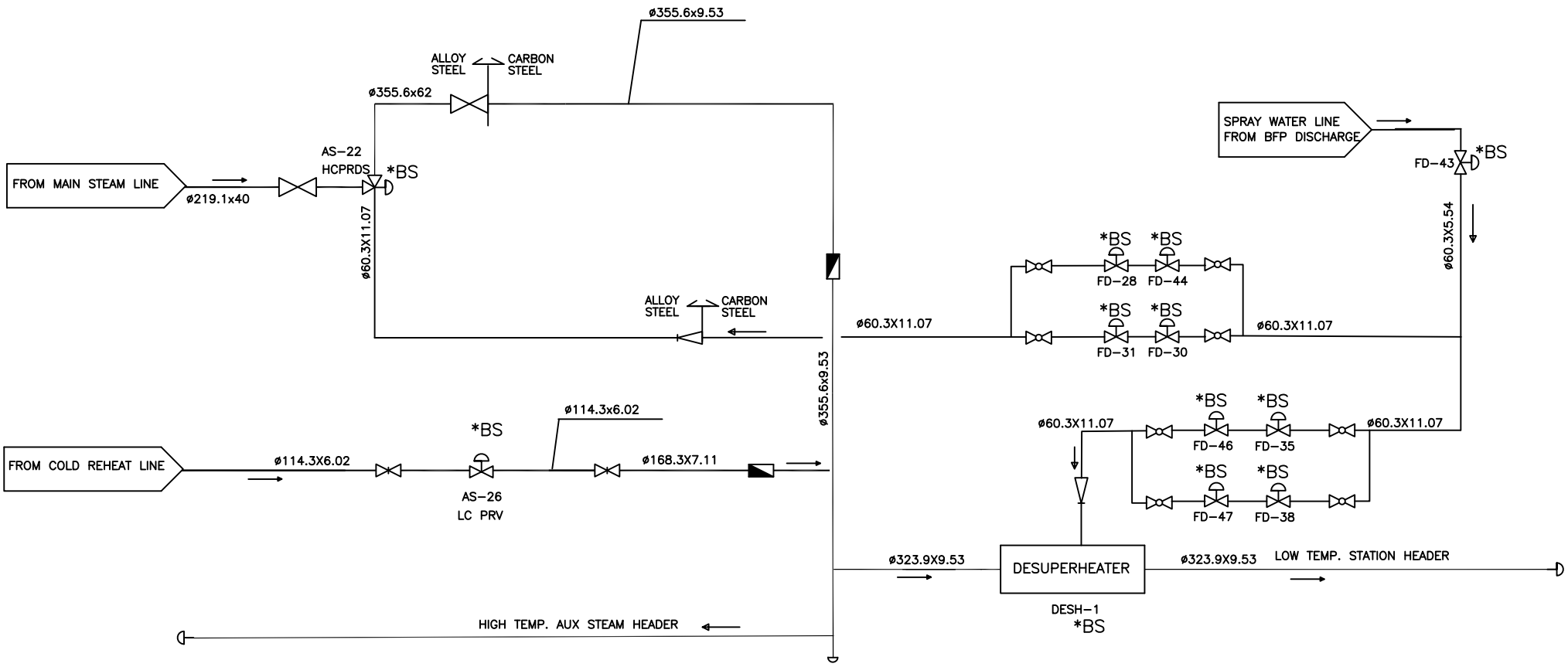

NOTE

1. EQUIPMENTS IN BIDDER'S SCOPE HAVE BEEN MARKED AS *BS

JOB NO.	STANDARD
	NTPC-1X500 MW FGUTPP-IV, UNCHAHAR
	BHARAT HEAVY ELECTRICALS LTD POWER SECTOR PROJECT ENGINEERING MANAGEMENT NEW DELHI
TITLE	TECHNICAL SPEC. for STANDARD AUXILIARY PRDS
DRAWING NO.	PE-TS-999-142-N101
SHEET	01 OF 01
REV.	00

DEPT CODE		NAME	SIGN	DATE
M	DRN	RKV		
	DESN	RKV		
	CHD	SSV		
	APPD	AK		

COPY RIGHT AND CONFIDENTIAL
The information on this document is the property of BHARAT HEAVY ELECTRICALS LIMITED
It must not be used directly or indirectly in any way detrimental to the interest of the company.