CAUTION: THE INFORMATION ON THIS DOCUMENT IS THE PROPERTY OF BHARAT HEAVY ELECTRICALS LTD
IT MUST NOT BE USED DIRECTLY OR INDIRECTLY IN ANYWAYDETERMINTAL TO INTEREST OF THE COMPANY

SLNo	⊗ MATERIALCODENo	RING DETAIL B	E	d	h	h1	Z	X	R1	R2	h2	HOUSING DETAIL D	H	A	h3	NET Wt
01	69 23 61 006 0	25	35	55	30	21	6	19.3	12.5	3	3	150	50	30	34	6
02	69 23 61 060 5	25.4	35.4	65												5.8
03	69 23 61 008 7	26	35	55										30		6.5
04	69 23 61 009 5	26.7	36	55										31		6.8
05	69 23 61 067 1	28	39	60	32	23		21.3			3.2			33	36	6.5
06	69 23 61 062 0	28.85	40													6.3
07	69 23 61 013 3	30												36		6.5
08	69 23 61 015 0	31.8	42	65												6.8
09	69 23 61 017 6	32														6.5
10	69 23 61 019 2	33.4	45		34	25		23.3			3.4			38	38	6.6
11	69 23 61 021 4	35			32	23		21.3			3.2			39		6.4
12	69 23 61 022 2	36	46		33	24		21.8	16		3.7			40	37	6.1
13	69 23 61 068 0	36.5	46.5		32									41		6.7
14	69 23 61 069 8	38	48	70	33									42		6.9
15	69 23 61 025 7	38.1	50		35	26		23.8			3.9			43	39	6.7
16	69 23 61 026 5	40			33	24		21.8			3.7			44	37	7.0
17	69 23 61 050 8	42	53	75	35	25	7	22.8		4	4.7			46	39	7.2
18	69 23 61 054 0	42.4	52.5													7.5
19	69 23 61 029 0	44.5	54.5	80										49		7.4
20	69 23 61 030 3	47.63	57.6											52		8.0
21	69 23 61 032 0	48.3	59											53		12.5
22	69 23 61 033 8	51	61	85				22.3	20		4.2			56		8.1
23	69 23 61 035 4	54	64										60	58		14.0
24	69 23 61 037 0	57	66	90	33	23		20.3			4			61	37	13.1
25	69 23 61 038 9	60.35	72	100	40	28	8	25.3		5	6.4			67	44	12.9
26	69 23 61 040 0	63.5	77.5	105	46	34		31.3			6			70	50	21.0
27	69 23 61 041 9	69.85	84	110								200	70	76	50	20
28	69 23 61 042 7	70													50	19.0
29	69 23 61 045 1	76.1	91	120	47	35		31.6	25		6.3			83	51	23.5
30	69 23 61 048 6	82.5	97.5	130	51	37	9	33.6		6	6.5			87	55	22.5
31	69 23 61 444 5	44.45	54.5	80	35	25	7	22.8	16	4	4.7	150	50	49	39	7.4
32	69 23 61 572 0	57.2	66.0	90	33	23		20.3	20		4.0		60	61	37	13.1
33	69 23 61 413 0	41.3	52.5	75	35	25		22.8	16		4.7		50	49	39	7.4
34	69 23 61 508 0	50.8	61.0	85				22.3	20		4.2			56	39	8.1
35	69 23 61 286 0	28.6	40.0	60	32	23	6	21.3	12.5	3	3.2			33	36	6.3

ALL DIMENSIONS ARE IN MILLIMETERS

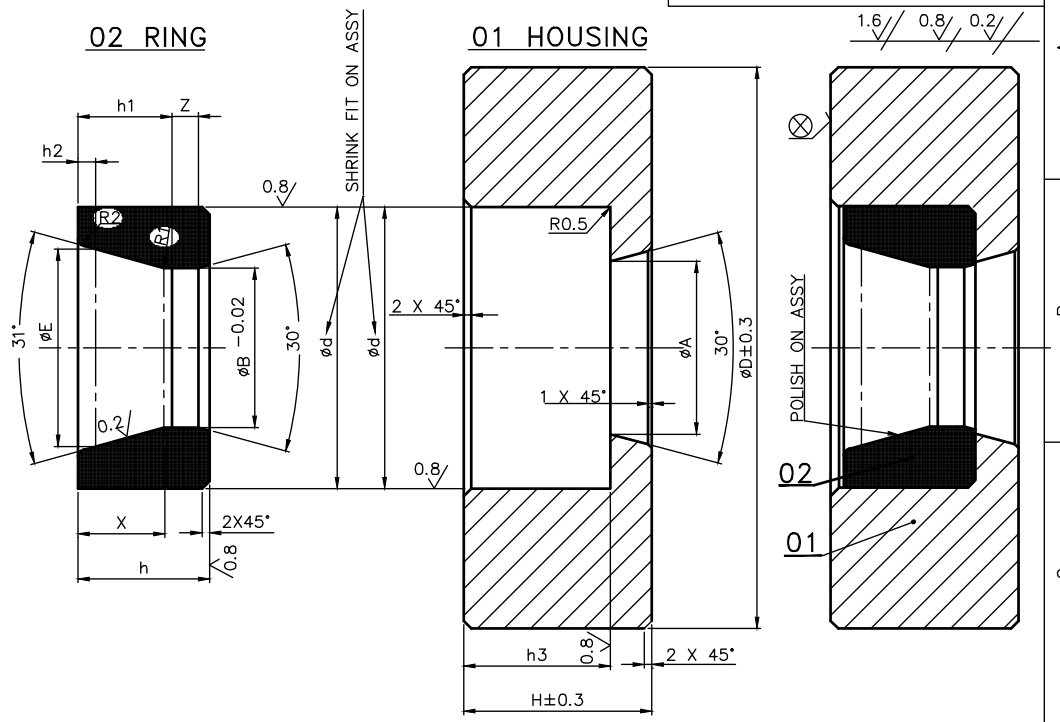

⊗ MARK MATERIAL CODE No.,CORRESPONDING øB VALUE GIVEN IN COLUMN, FIRMS NAME & P O No.

ITEM NO	DESCRIPTION	MATERIAL SPECIFICATION
02	RING	TUNGSTENCARBIDE TUNGSTON(W): 85% COBALT(Co) : 15% HARDNESS 1200 HV
01	HOUSING	55C8 IS:1570(Part II)−1979 HARDNESS 41−47 HRC

Bharat Heavy Electricals Ltd
SEAMLESS STEEL TUBE PLANT
TIRUCHIRAPALLI − 620014

	NAME	SIGNATURE	DATE
DRN	R.KUMAR	R.Kumar	09/10/13
CHD	N ARUMUGANAINAR	N A Nainar	
APPD	M MARUDHAVANAN	M Marudhavanan	

REV	DATE		
13	09/10/13	ALTERED	R.Kumar
		CHECKED	N A Nainar
		APPROVED	M Marudhavanan

ZONE: SL.No.31−35 ADDED

DEPT CODE	GRADE OF UNTOL. DIM	SCALE	WEIGHT (Kg)	REF TO ASSY DWG NO	ITEM NO
T E	C/M/F	1:1	SEETABLE	10.ST.221.01.121/11	
				REF TO OLD DWG NO 0202070−06.601−641	

TITLE: DRAWDIE (ø25&ABOVE)

CARD CODE: U 01

DRAWING NO : 20−ST−221−01−179

REV: 13

ALL DIMENSIONS ARE IN MILLIMETERS

THE INFORMATION ON THIS DOCUMENT IS THE PROPERTY OF BHARAT HEAVY ELECTRICALS LTD
CAUTION: IT MUST NOT BE USED DIRECTLY OR INDIRECTLY IN ANYWAYDETERMINTAL TO INTEREST OF THE COMPANY

SLNo	⊗ MATERIALCODENo	RING DETAIL B	E	d	h	h1	Z	X	R1	R2	h2	HOUSING DETAIL D	H	A	h3	NET Wt
01	6923610010	14	22	35	24	18	4	16.9	8	2	2.4	150	45	18	28	2.6
02	6923610494	16	27	40	26	20	4	18.6	10		2.3			22	30	2.5
03	6923610613	17.1														
04	6923610591	17.5														
05	6923610028	18														
06	6923610036	19.05	29	45										24		2.4
07	6923610583	20														2.3
08	6923610044	21.3	31	50	32	23	6	21.6		3	3.6		50	26	36	2.4

1.6 / 0.8 / 0.2

DEVIASIONS OF UNTOLERANCED DIMENSIONS TO BE ASPER IS:2102-1969 MEDIUM.

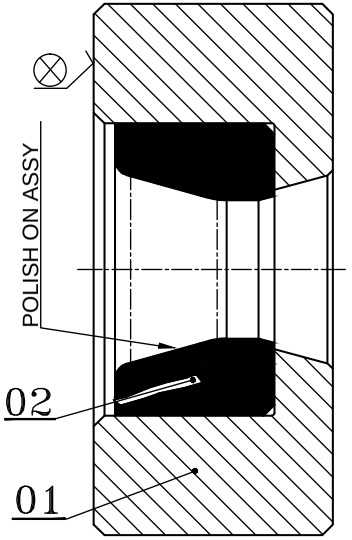

02 RING

01 HOUSING

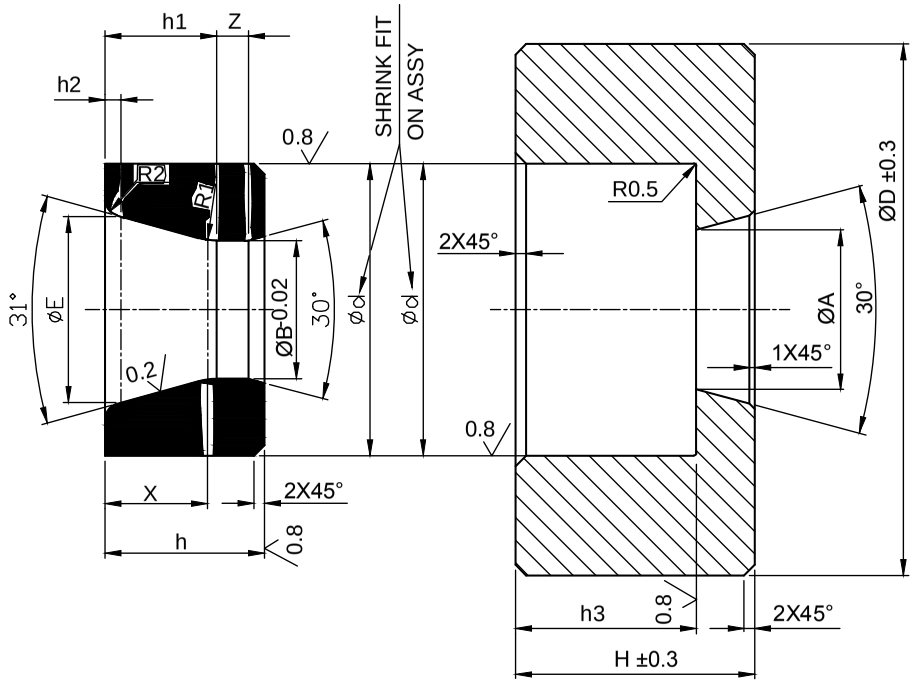

⊗ MARK MATERIAL CODE No.,CORRESPONDING Ø B VALUE,FIRMS NAME & P O No.

ITEM NO	DESCRIPTION	MATERIAL SPECIFICATION
02	RING	TUNGSTENCARBIDE TUNGSTEN(W) 85% COBALT(Co) 15% HARDNESS 1200 HV
01	HOUSING	55C8 IS:1570(Part II)-1979 HARDNESS 41-47 HRC

Bharat Heavy Electricals Ltd
SEAMLESS STEEL TUBE PLANT
TIRUCHIRAPALLI – 620014

	NAME	SIGNATURE	DATE
DRN	R.KUMAR	R.Kumar	09/10/13
CHD	N ARUMUGANAINAR	N A Nainar	
APPD	M MARUDHAVANAN	M Marudhavanan	

DEPT	GRADE OF UNTOL. DIM	SCALE	WEIGHT(kg)	REF TO ASSY DWG NO	ITEM NO
T E	C/M/F	1:1	SEETABLE	10.ST.221.01.121/11	
CODE				REF TO OLD DWG NO 0202070–06.601–641	

TITLE: DRAWDIE (Ø100X45)

CARD CODE: U 01

DRAWING NO : 30–ST–221–01–496

REV 02

REV	DATE	ALTERD BY	APPROOVED BY
01	29.12.12	R.Kumar	N A Nainar

Ø26(ØB)REMOOVED FROM THIS DRAWING

REV	DATE	ALTERD BY	CHECKED BY	APPROOVED BY
02	09/10/13	R.Kumar	N A Nainar	M Marudhavanan

DIMENSION ØD150 WAS 100 FOR SL.Nos.01–07

Annexure-A

Important Note to Tenderers

This Tender is floated on TWO–BID System. Tenders are requested to submit their offers in TWO-BIDS (Part I: Un priced bid and Part II: Price Bid) separately in a sealed cover as follows.

1. **Part I: UN PRICED BID:** (Complete with technical & Commercial conditions as per enquiry including un priced copy of price schedule i.e. identical to part II with prices blanked and replaced by "Quoted")
   The Tenderer should confirm their acceptance / comments to each and every clause of Annexure-A to Enquiry along with other commercial Terms & Conditions of Tender. In case any deviation is taken by the Tenderer from the Tender requirements, it is to be clearly indicated in the offer with reference to the particular clause. If such deviations are not explicitly indicated in the offer, it will be construed by BHEL that the Tenderer is complying with Annexure Clause(s), Commercial terms & conditions and other conditions in full. Any such non-compliance on these points, if raised / highlighted by the Tenderer, after opening the Price Bid, it will not be accepted by BHEL and the tender evaluation will be done based on the original offer submitted by them.

2. **Part II: PRICE BID:** Price (with break-up details wherever required) alone to be indicated. Price bid shall **not** contain any technical and commercial details.

3. **Both Un priced Bid and Price Bid is** to be submitted in a single envelop before 14.00 hours (Indian Time) on tender Due Date.

4. The **Unpriced Bid** shall be put in a separate sealed cover superscribed with Tender number, Tender Date & Tender Due Date and also the cover should be clearly marked with "UNPRICED BID".

5. The **Price Bid** shall be put in a separate sealed cover superscribed with Tender number, Tender Date & Tender Due Date & the cover should be clearly marked with "PRICE BID".

6. Both the individually enveloped **UNPRICED BID** and **PRICE BID** covers as mentioned above, have to be put in another single bigger cover clearly indicating Tender number, Tender Date & Tender Due Date at the top of the cover. This cover is to be addressed to Purchase Executive, Purchase Department, Seamless Steel Tube Plant (SSTP), BHEL, Tiruchirapalli-620014, India.

7. Unpriced Bid shall only be opened on the Tender Due Date mentioned in the Tender, in the presence of Tenderers / their Authorized Representative, who may like to be present for such opening. The price bid will NOT be opened on the date of tender opening.

8. After opening the Unpriced Bid, they shall be evaluated by BHEL for their suitability. BHEL shall hold discussions with the responded Tenderers on the Technical and Commercial terms and freeze the technical specifications. These frozen technical specifications will be communicated to responded tenderers.

9. BHEL shall offer opportunity to the responded and technically / commercially suitable Tenderers, to submit their latest Price Bid in line with the frozen technical delivery conditions.

10. This latest Price Bid for the frozen technical specifications submitted by the Tenderers will be opened in the presence of those Tenderers who have submitted the latest Price Bid. Based on the latest Price Bid only, the ranking of the Tenderers shall be made and accordingly the Tender shall be finalized.

---..---

Annexure – B.

Technical Conditions

(Page No. 1 of 2)

Vendor Code:	Vendor Name:	
Tender No.:	Tender Date:	Tender Due Date:

:

Sl.No.	Technical Requirement	Accepted
B.1.	To supply of Materials as per Tender Specifications / Drawings without any deviation.	
B.2.	Accept to supply Tungtun 85% and cobalt 15% with Hardness 1200 HV also Certificate for Material chemistry and Hardness shall be given with supplies.	
B.3.	carbide Manufacturer Certificate enclosed with Technical bid.	
B. 4.	To supply of materials with suitable preservation and packing.	
B.5.	Dimensional report & Inspection report shall be sent with supplies.	
Deviations, if any (attach additional sheet, if reqd) :		

Signature with Date	Seal

Annexure – C.

Commercial Conditions

(Page No. 2 of 2)

Vendor Code:	Vendor Name:	
Tender No.:	Tender Date:	Tender Due Date:

Sl.No.	Commercial Terms	Accepted
C1.	Delivery Terms : Free delivery at BHEL/SSTP Stores.	
C2.	Payment : 100% after 45 days after receipt and acceptance of materials by BHEL	
C3.	LIQUIDATED DAMAGES: It is clearly understood among the parties to the Contract that TIME IS THE ESSENCE OF THE CONTRACT. Therefore, the delivery of the goods specified in the Purchase Order shall be made within the time prescribed. Where the Seller supplies or despatches the goods, beyond the delivery period specified, and the Purchaser will have no obligation to accept the goods. If accepted, Liquidated Damages at the rate of 0.5% (Zero point five Percent) of the value of goods delayed, per week of delay, subject to a maximum of 10% (Ten Percent) or part thereof, will be levied without prejudice to any other relief or compensation due to the Purchaser under any other conditions of the Contract. RISK PURCHASE: Alternatively, the Purchaser, at his option, will be entitled to terminate the Contract and to purchase elsewhere at the risk and cost of Seller, either the whole of the goods or any part, which the Seller has failed to deliver or dispatch within the time stipulated as aforesaid or if the same were not available the best and nearest available substitute thereof. The Seller shall be liable for any loss, which the Purchaser may sustain by reason of such Risk Purchase(s), in addition to penalty at the rate mentioned in Clause No.06 above.	
C4.	Validity of Offer - 60 Days from the Date of Tender Opening.	
C5.	Delivery period required : Delivery from PO Date — Enq.Sl. Nos. 1 to 14 Within 12 Weeks — All Quantity.	

Sl.No.	Commercial Terms	
C6.	a. Excise Duty Tariff Heading	
	b. Excise Duty (%)	
	c. CESS on ED (%)	
	d. Total of ED and CESS (%)	
C7	a. TVNAT (%)	
	b. CST (%)	
C8.	Other Cost (if any) - % (or) Rs.	
C9	Are you Micro/Small/Medium Industry? (If YES, please furnish MSM Regn.No., along with a copy of MSM Certificate)	YES / NO MSM No. MSM Certificate enclosed(Yes/NO)

Signature with Date & Seal ::