DRG.NO. 0-103 07-62903

1.6/ (√Rz20)

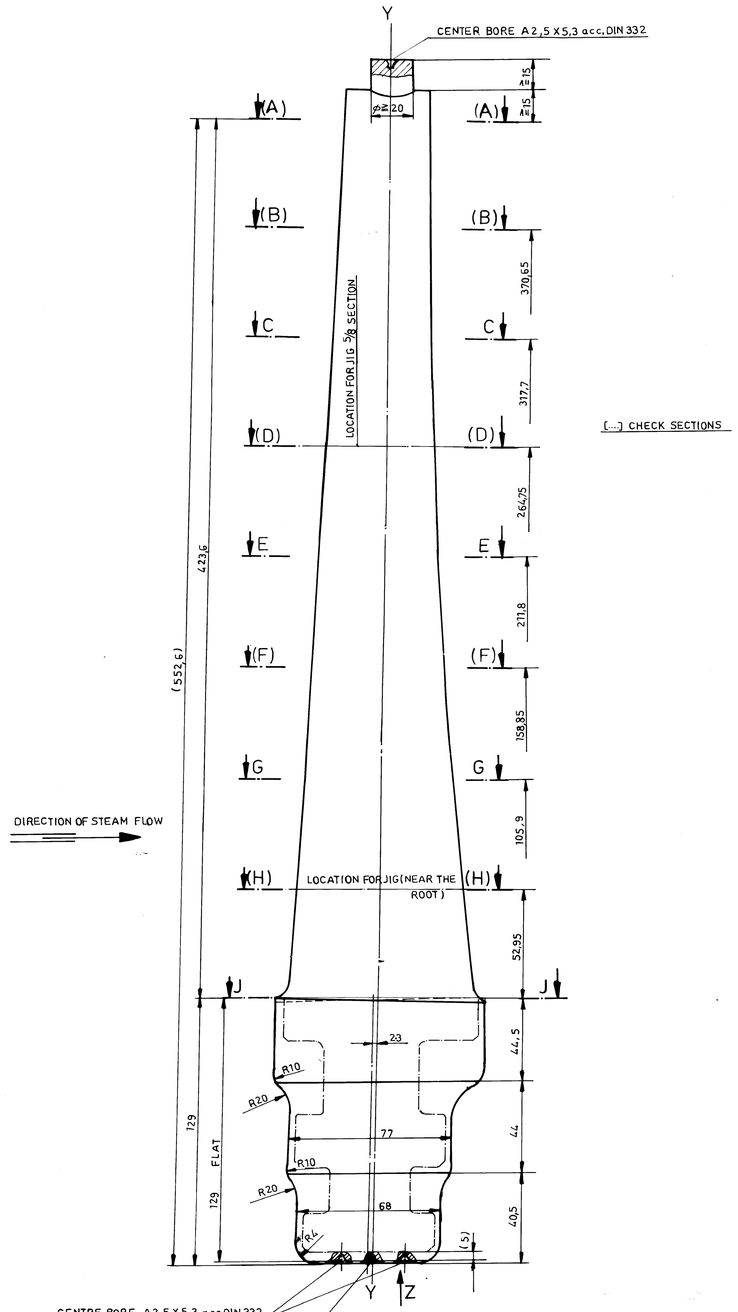

VIEW Z

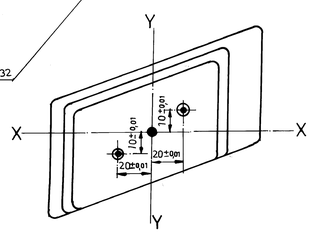

SECTION B-B

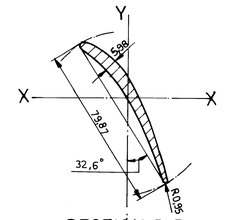

SECTION D-D

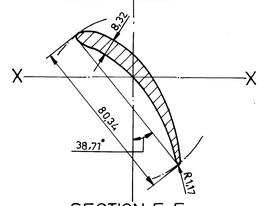

SECTION F-F

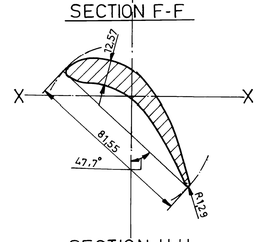

SECTION H-H

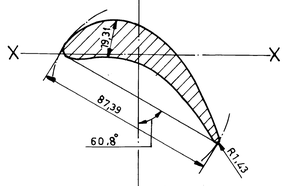

SECTION J-J

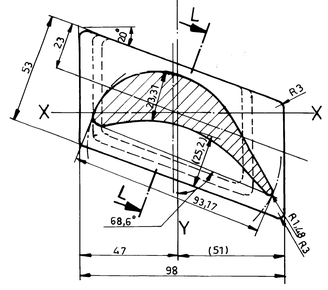

SECTION L-L

(SIMPLIFIED DIAGRAM)

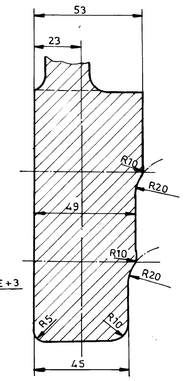

ROOT TOLERANCE +3

CONTOUR OF THE BASE PLATE

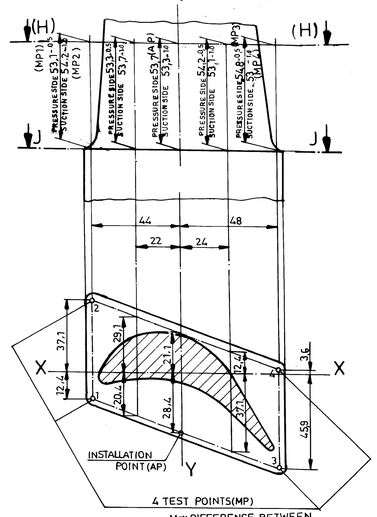

TOLERANCE INTERPRETATION

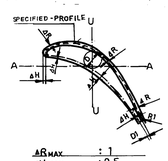

ΔR_{MAX}	: 1
ΔH_{MAX}	: 0.5
$(\Delta R+\Delta H)_{MAX}$	: 1
max Diff ΔR	: 0.5
ΔD	: 0.5
ΔD1	: 0.5

NOTES:-

1. PROFILE CO. ORD. AS PER 1-10307-62022 DRG.
2. SURFACE QUALITY FOR THE BLADE : 1.6/ (√Rz20)
3. ALL UNMENTIONED RADII: R3

DIAGRAM FOR

LEFT BLADE RIGHT BLADE

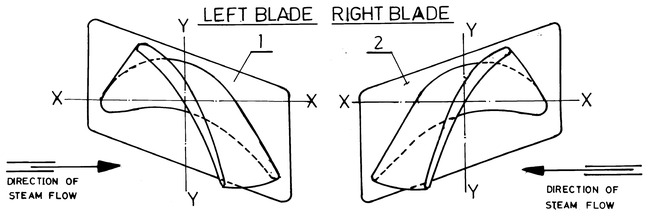

VAR:01 VAR:02

TYPE OF PRODUCT OR NAME OF CUSTOMER / PROJECT					
	DRN	L W C			NO OF VARS
	CHD	TS.PRABHAKAR		21.02.89	
	APPD	BVSN.SASTRY		21.02.89	
DEPT CODE	GRADE OF TOL. DIM. C/M/F	SCALE	WEIGHT (KG)	REF TO ASSY DRG	ITEM NO / NO OF ITEMS
TITLE MOVING BLADE FORGING (III)		CARD CODE	DRAWING NO 0-10307-62903		REV 00
			SHEET NO 01	NO OF SHEETS 01	

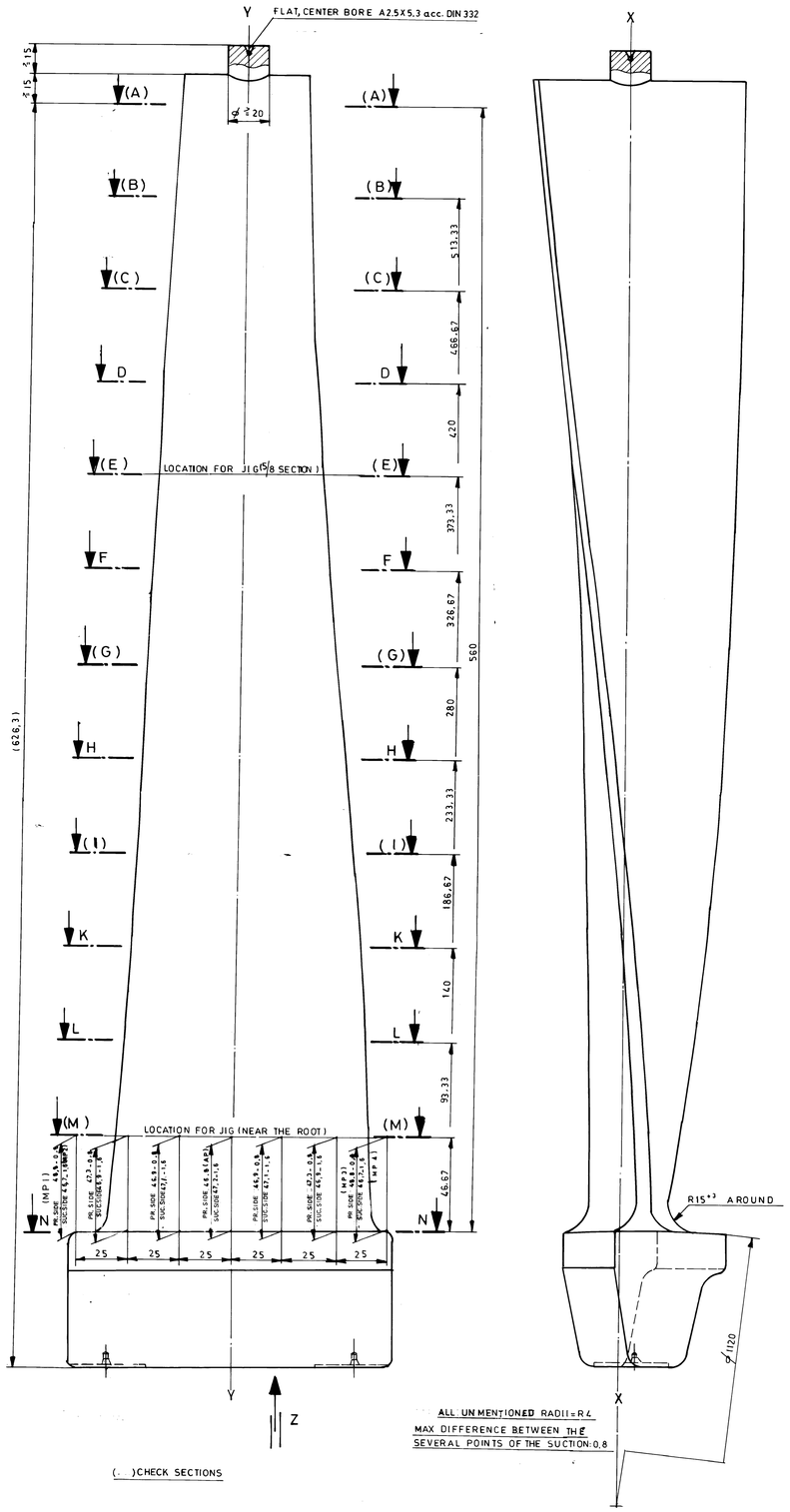

(...)CHECK SECTIONS

ALL UNMENTIONED RADII = R4

MAX DIFFERENCE BETWEEN THE SEVERAL POINTS OF THE SUCTION: 0.8

SECTION 'B-B'

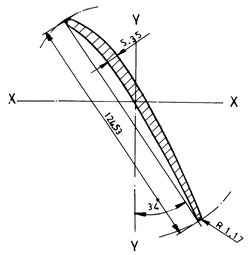

SECTION 'E-E'

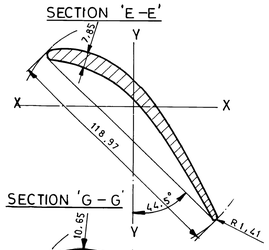

SECTION 'G-G'

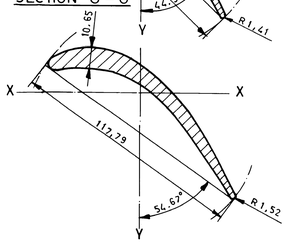

TOLERANCE INTERPRETATION

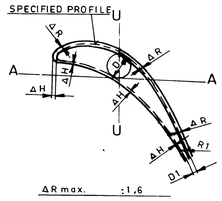

ΔR max.	:1.6
ΔH max.	:0.8
Σ(ΔR + ΔH) max	:1.6
max. DIFF. ΔR	:0.8
ΔD	:0.8
ΔD1	:0.8

CHANGE OF PROFILE POSITION IN THE JIG

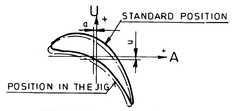

SECTION	a	u
E - E	-0.14	-0.14
M - M	-0.03	-0.2

SECTION 'S-S' (SIMPLIFICATION TO DISPLY)

SCALE 2 : 1

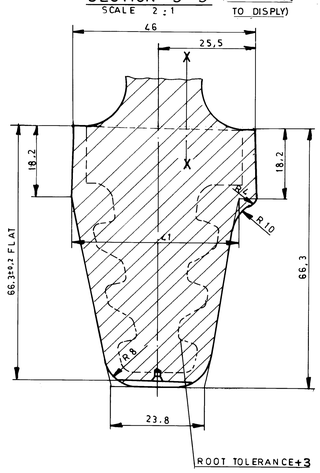

NOTES:

1. PROFILE CO-ORD. AS PER DRG. 1-10307-6 2024
2. SURFACE QUALITY FOR THE BLADE 1.6/ (√Rz 20)

DIAGRAM FOR

LEFT BLADE

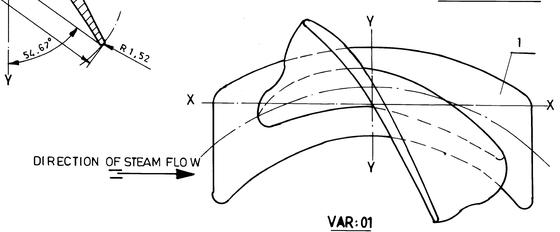

VAR:01

RIGHT BLADE

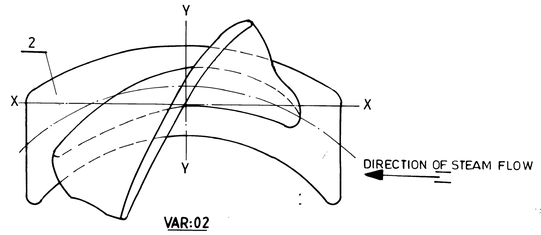

VAR:02

SECTION 'M-M'

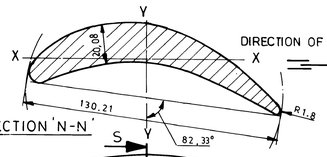

SECTION 'N-N'

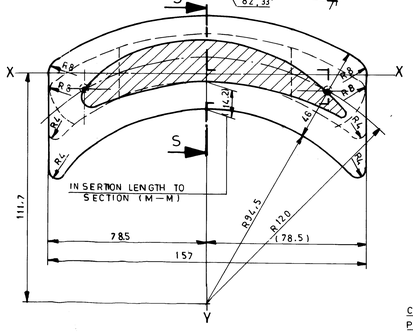

CONTOUR OF THE BASE PLATE

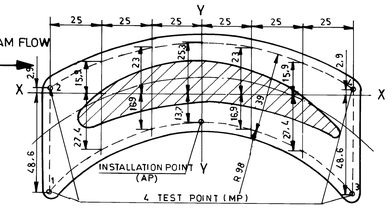

VIEW 'Z'

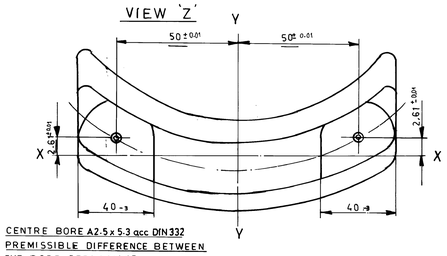

CENTRE BORE A2.5 x 5.3 acc DIN 332
PERMISSIBLE DIFFERENCE BETWEEN THE BORE DEPTH 5:0.05

TYPE OF PRODUCT OR NAME OF CUSTOMER/PROJECT					
	DRN	V. VIJA RA		21-1-88	NO. OF VAR.
	CHD	T.S. PRABHAKAR		26-2-89	
	APPD	B.S.S.I. SASTRY		28-2-89	
DEPT. ITD	GRADE OF TOL. DIM. C/M/F	SCALE 2:1, 1:1	WEIGHT (KG)	REF TO ASSY. DRG. 7264 – 36556 Rev B	ITEM NO. / NOOF ITEMS
CODE 415					
TITLE MOVING BLADE FORGING (IV)		CARD CODE	DRAWING NO. 0-10307-62904		REV. 00
			SHEET NO. 01	NO. OF SHEETS 01	

1-10307-62904

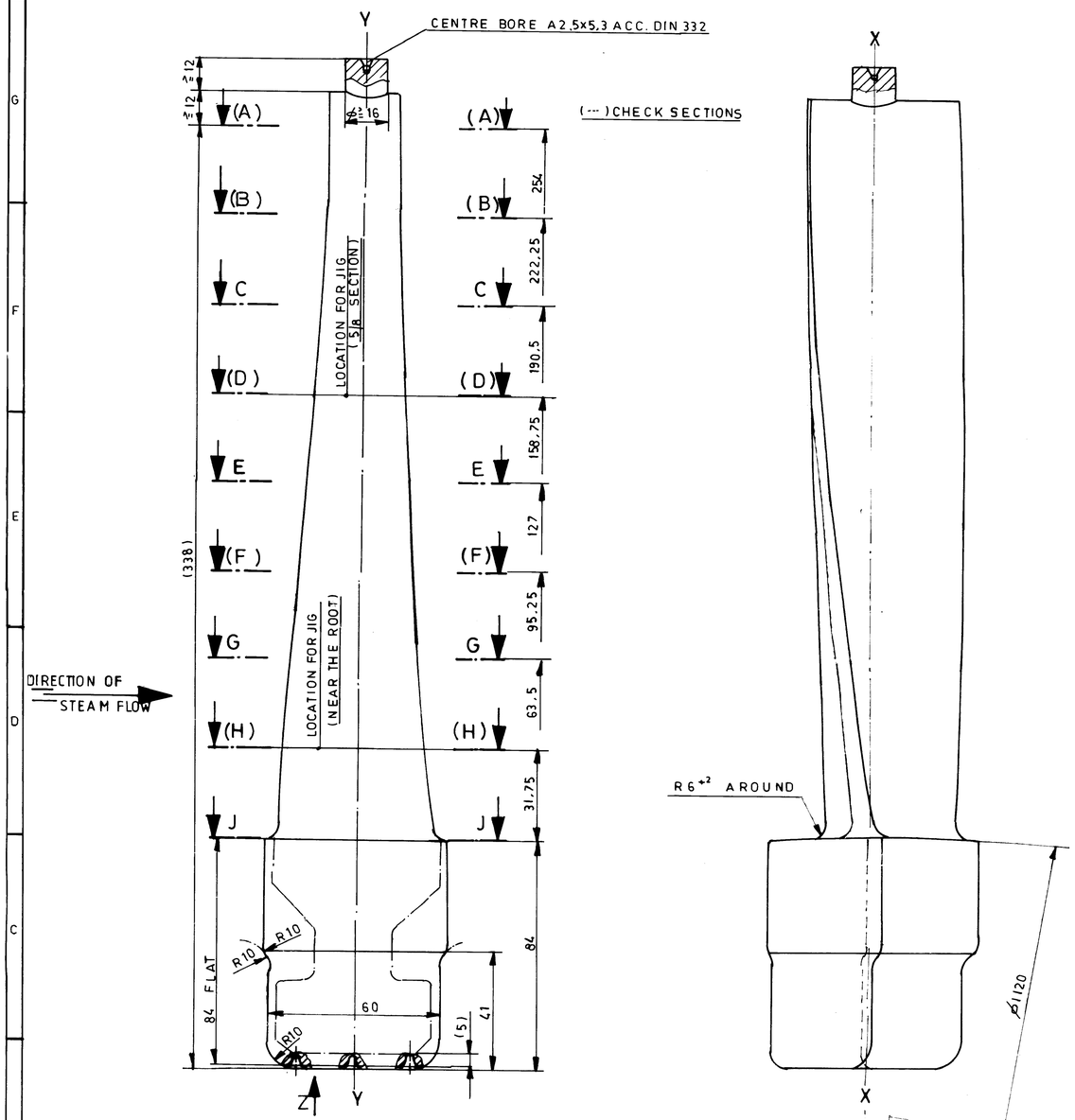

VIEW 'Z'

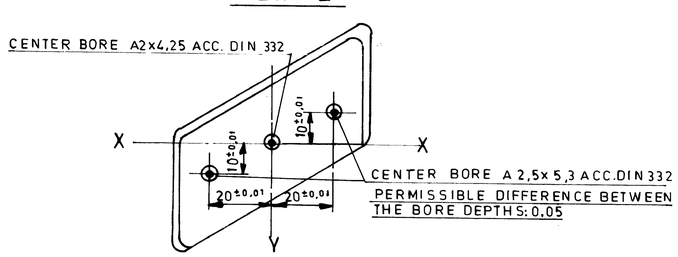

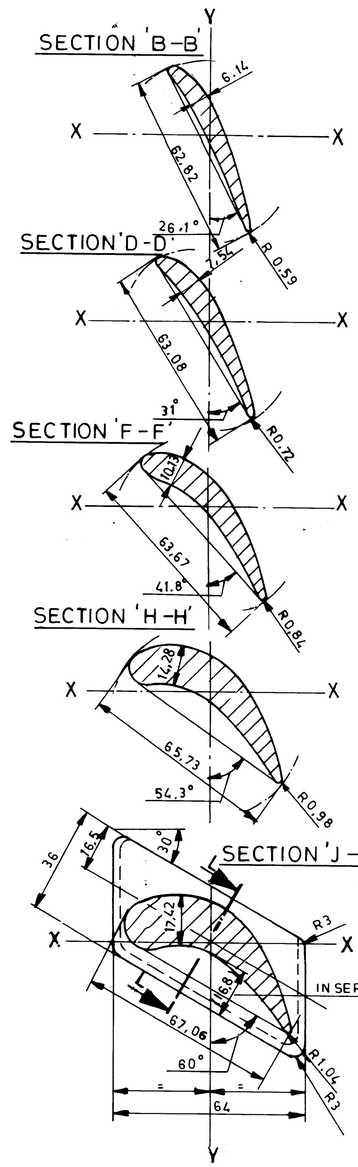

SECTION 'L-L'
(SIMPLIFIED DIAGRAM)

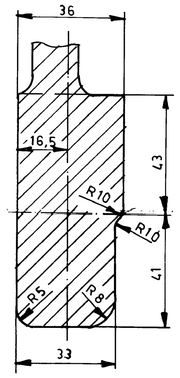

ROOT TOLERANCE = +3

TOLERANCE INTERPRETATION

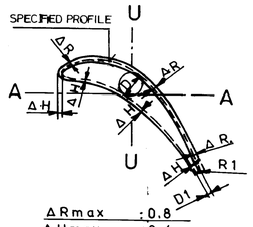

ΔR max	: 0.8
ΔH max	: 0.4
Σ(ΔR+ΔH) max	: 0.8
max. DIFF ΔR	: 0.4
ΔD	: 0.4
ΔD1	: 0.4

CONTOUR OF THE BASE PLATE

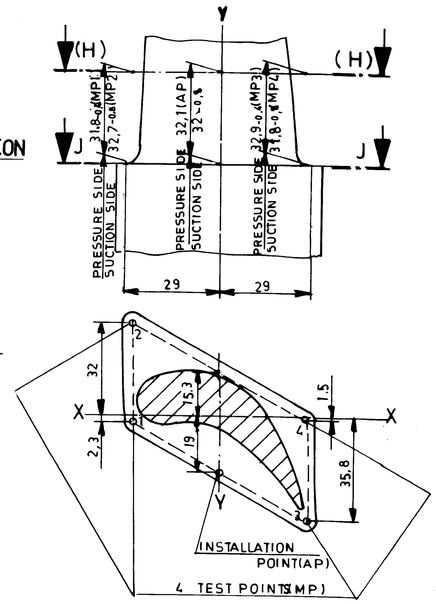

MAX DIFFERENCE BETWEEN THE SEVERAL POINTS OF THE SUCTION SIDE = 0.4

DIAGRAM FOR

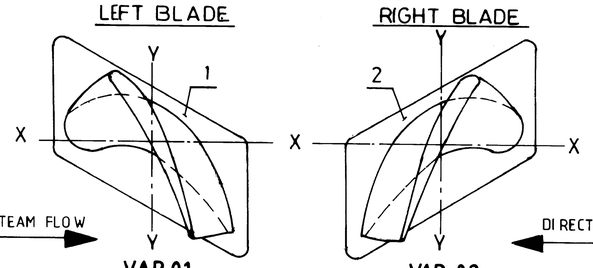

VAR:01 VAR:02

NOTES:-
1. PROFILE CO-ORD. AS PER DRG 1-10307-62021
2. SURFACE QUALITY FOR THE BLADE: 1.6 (√Rz 20)
3. ALL UNMENTIONED RADII = R3

ADDITIONAL INFORMATION	TYPE OF PRODUCT OR NAME OF CUSTOMER/PROJECT							
STATUS OF DRAWING								
DISTRIBUTION OF PRINTS.		DRN	NAME V. Vijaya	SIGN	DATE 23-1-89	NO. OF VAR		
		CHD	TS.PRABHAKAR		18.02.89			
		APPD	BVSN. SASTRY		18.02.89			
REV / DATE / ALTERED / CHECKED / ZONE	DEPT / CODE	GRADE OF UNTOL DIM C/M/F	SCALE	WEIGHT (KG)	REF. 7396-34551a	DRG.	ITEM NO.	NO. OF ITEMS
	TITLE MOVING BLADE FORGING (I)			CARD CODE	DRAWING NO. 1-10307-62904		REV 00	
					SHEET NO. 01	NO. OF SHEETS 01		

DRG. No. 1-10307-62905

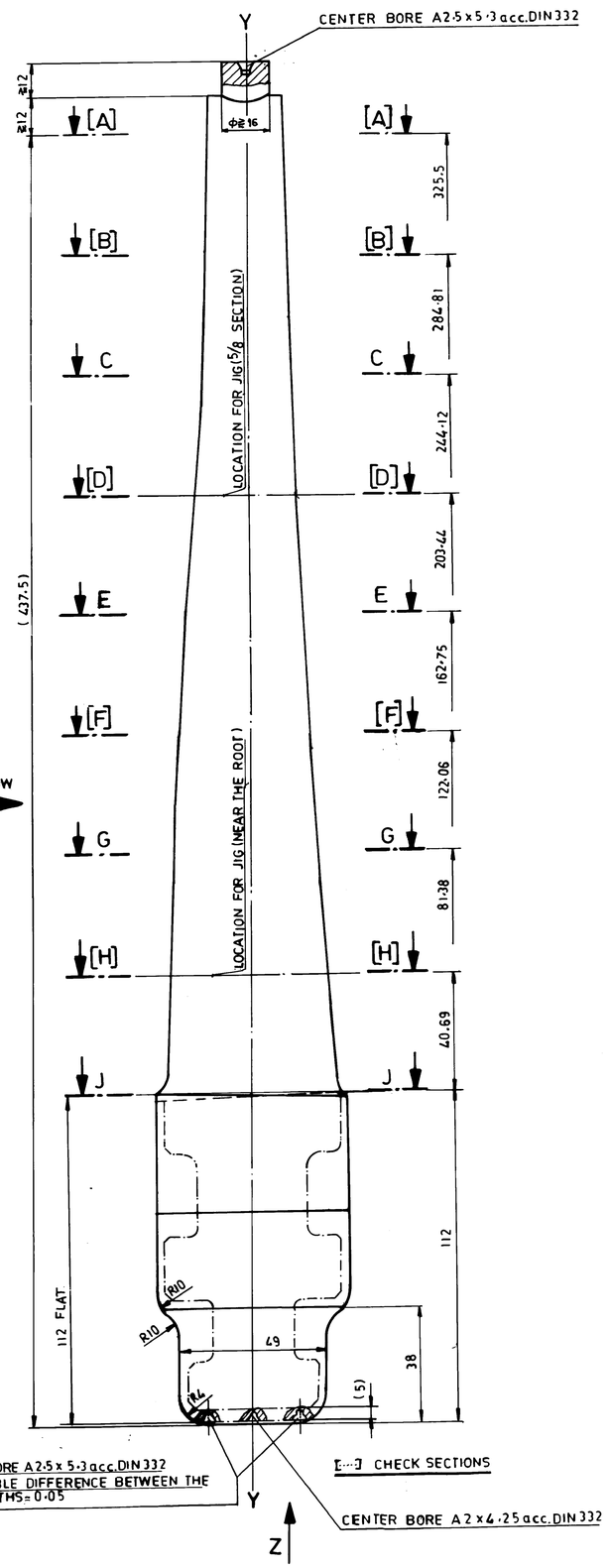

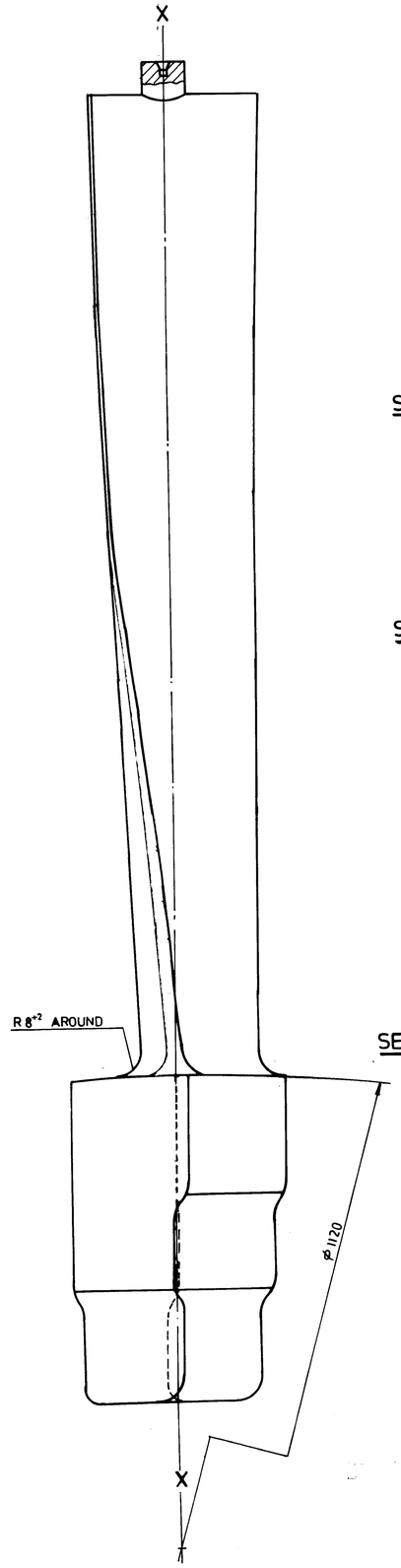

SECTION B-B

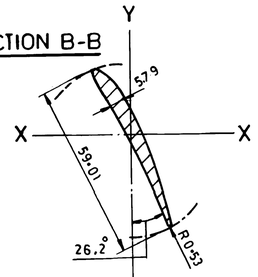

SECTION D-D

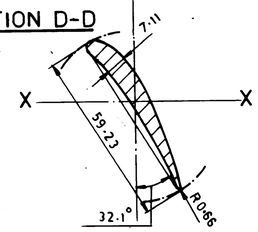

SECTION F-F

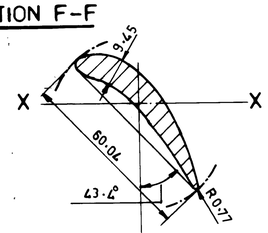

SECTION H-H

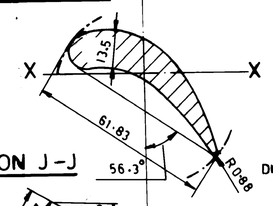

SECTION J-J

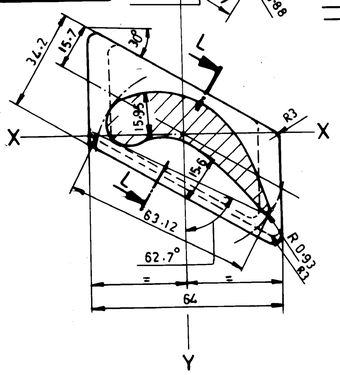

SECTION L-L

(SIMPLIFIED DIAGRAM)

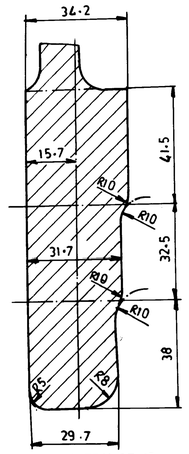

ROOT TOLERANCE +3

TOLERANCE INTERPRETATION

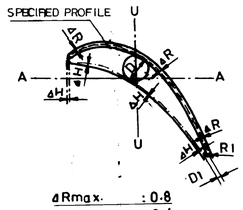

ΔRmax.	: 0·8
ΔHmax.	: 0·4
Σ(ΔR+ΔH)max	: 0·8
max Diff ΔR	: 0·4
ΔD	: [illegible]
ΔD1	: 0·4

Contour of the base plate

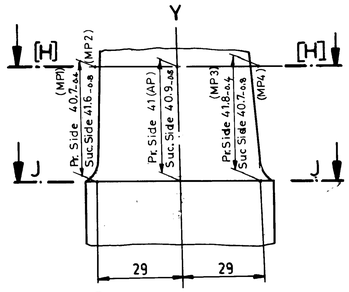

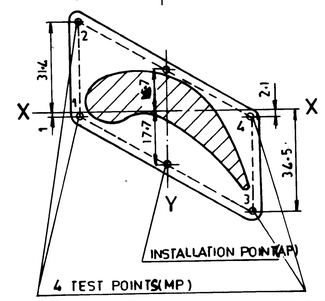

MAX. DIFFERENCE BETWEEN THE SEVERAL POINTS OF THE SUCTION SIDE = 0.4

DIAGRAM FOR

LEFT BLADE

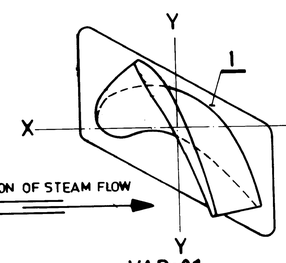

VAR:01

RIGHT BLADE

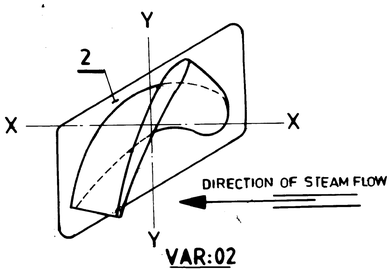

VAR:02

DIRECTION OF STEAM FLOW

NOTES:-

1. PROFILE CO-ORD. AS PER DRG. 1-10307-62022
2. SURFACE QUALITY FOR THE BLADE : 1.6/ (√Rz 20)
3. ALL UNMENTIONED RADII = R3

VIEW 'Z'

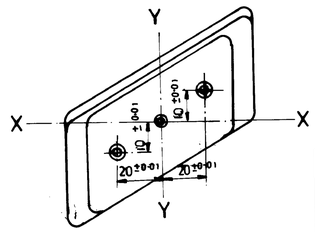

TYPE OF PRODUCT OR NAME OF CUSTOMER/PROJECT					
	DRN.	A. Abdulla	19.1.89		NO. OF VAR.
	CHD.	TS. PRABHAKAR	20.02.89		
	APPD.	BVSN. SASTRY	20.02.89		
DEPT CODE	GRADE OF MATL. DIM. C/M/F	SCALE	WEIGHT (KG)	REF. TO ASSY. DRG.	ITEM NO / NO OF ITEMS
TITLE: MOVING BLADE FORGING (II)		CARD CODE	DRG. NO. 1-10307-62905		REV. 00
			SHEET NO 01	NO OF SHEETS 01	

SIZE A1

INVENTORY NO | SIGN AND DATE | REF. DRG. NO. 1-7336-36552 Alt-A

FIRST ANGLE PROJECTION

(ALL DIMENSIONS ARE IN mm)

DRG. NO.1-303-22-20008 SH. 01 OF 01

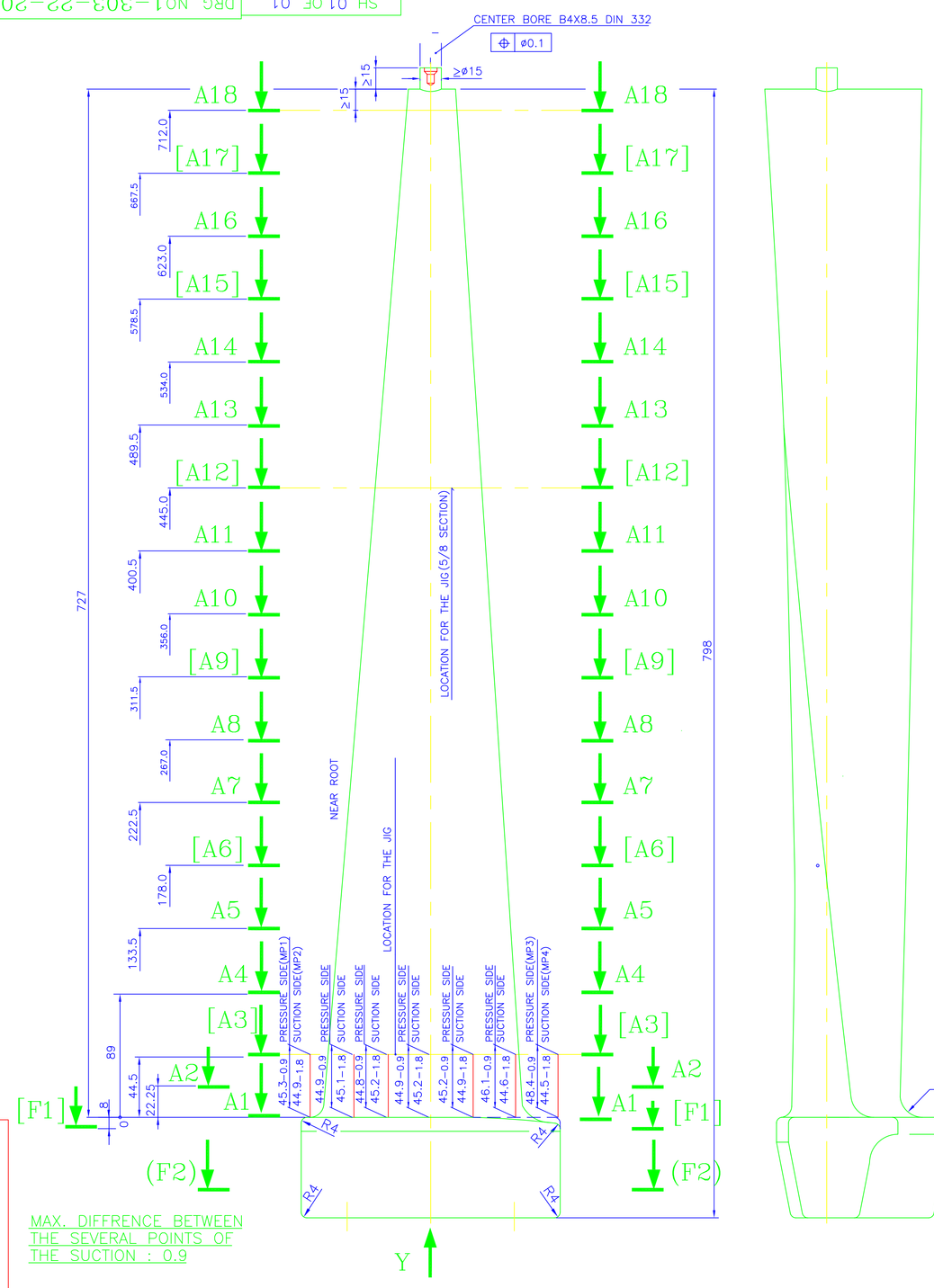

MAX. DIFFRENCE BETWEEN THE SEVERAL POINTS OF THE SUCTION : 0.9

CONTOUR OF THE BASE PLATE

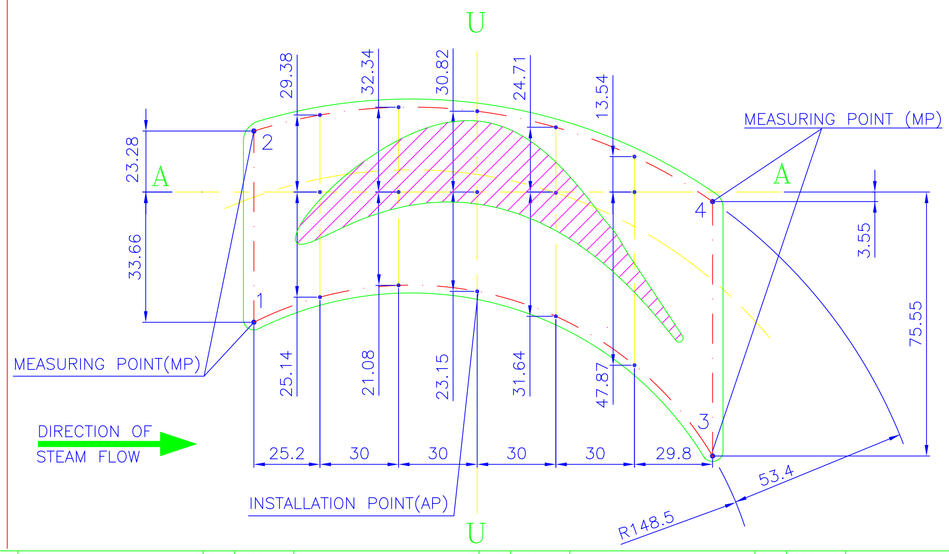

SECTION A17–A17

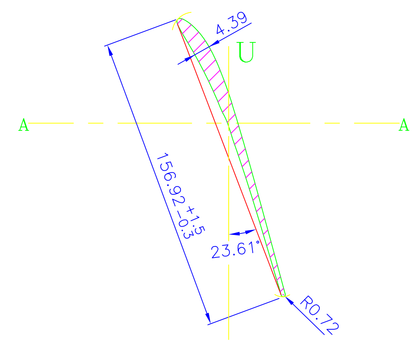

SECTION A12–A12

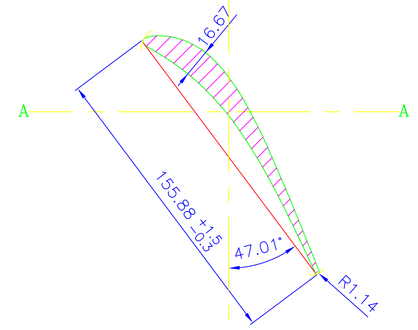

SECTION A6–A6

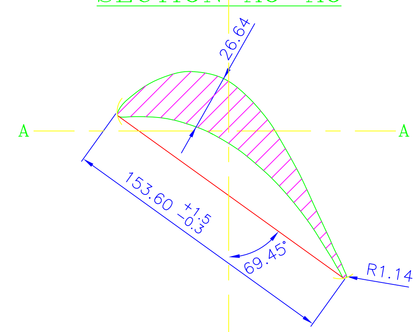

SECTION A3–A3

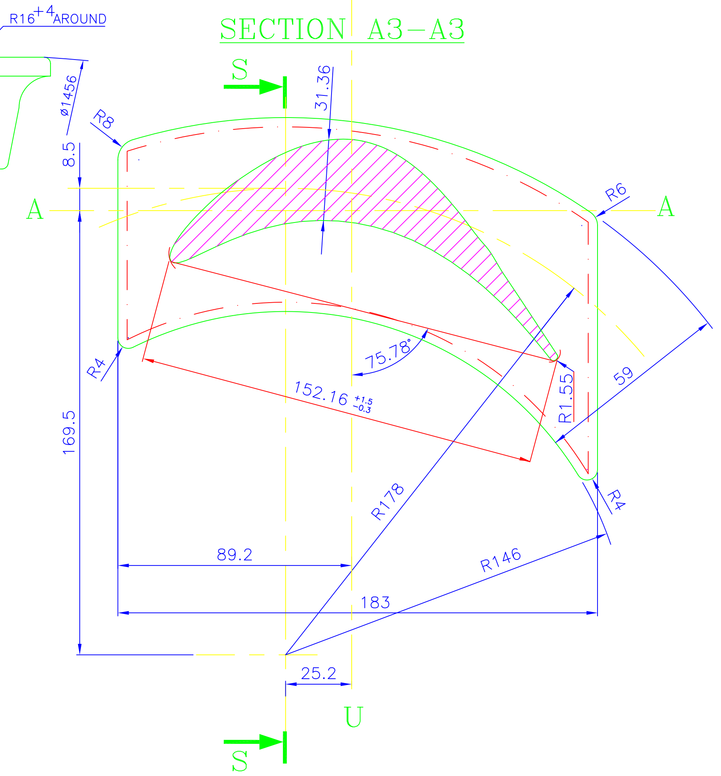

VIEW–Y

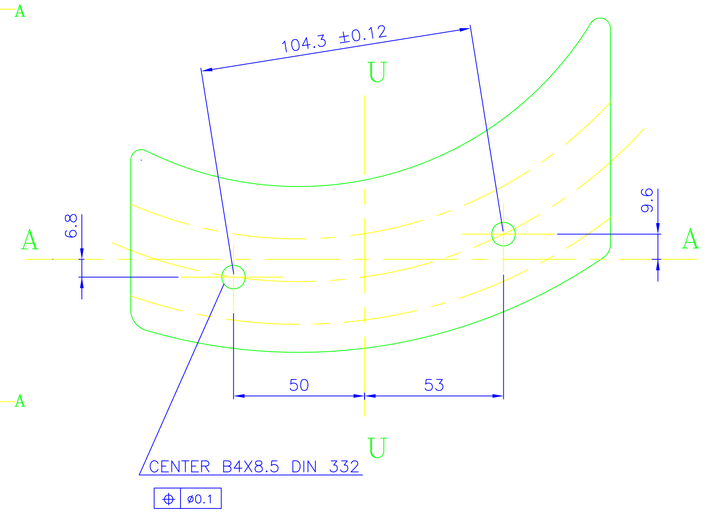

SECTION S–S

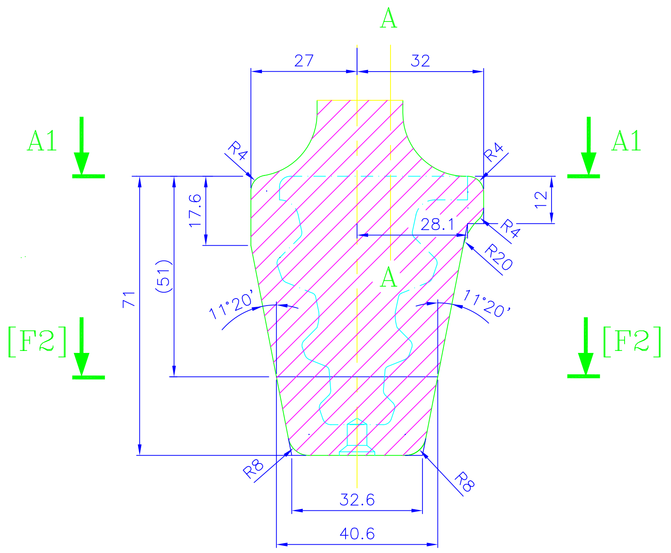

DIAGRAM FOR

LEFT BLADE

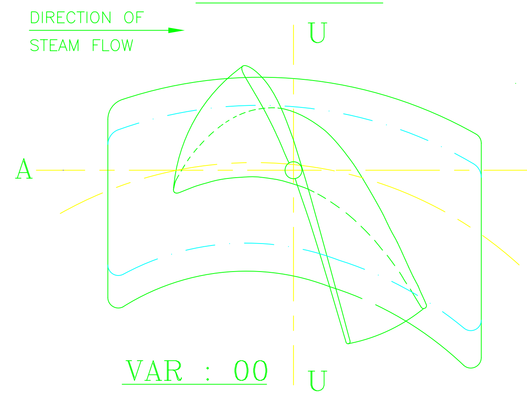

RIGHT BLADE

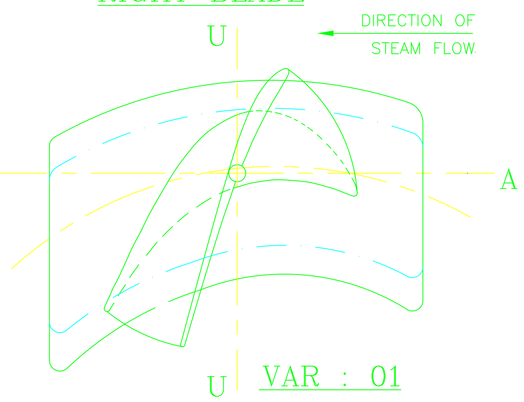

NOTES:

1. TOLERANCE VALUES FOR PROFILE:

SUCTION SIDE	△R Max	=	1.8
PRESSURE SIDE & INLET EDGE	△H Max	=	0.9
	Max Diff△R	=	0.9
	Σ(△R+△H)Max	=	1.8
PROFILE THICKNESS	△D	=	0.9

2. SURFACE FINISH FOR THE BLADE:
   PROFILE : 3.2/
   INLET AND EXIT EDGE : 0.8/
   REMAINING PLACES : /
3. TOLERANCE VALUE FOR ROOT: +3
4. ALL UNDIMENSIONED RADII OF THE ROOT ARE R4.
5. BLADE PROFILE AS PER DRG. NO: 1-303-22-00008-00
6. ALL SECTIONS MARKED WITH BRACKETS [ ] ARE TO BE TAKEN AS CHECK SECTIONS FOR INSPECTION OF PROFILE.
7. CENTRE HOLES ARE TO BE MADE WITH RESPECT TO PRESSURE SIDE AND INLET EDGES OF BOTH THE REFERENCE SECTIONS (i.e.NEAR-THE-ROOT & 5/8).INLET EDGES OF BOTH THE SECTIONS ARE TO BE MADE NOMINAL (△H=0 AT INLET)
8. CENTRE HOLES OF SIZE B4x8.5 TO BE MADE ACC. TO DIN332 DIFFERENCE BETWEEN THE DEPTH OF CENTRE HOLES AT ROOT NOT TO BE EXCEED 0.05MM.

TOLERANCE INTERPRETATION

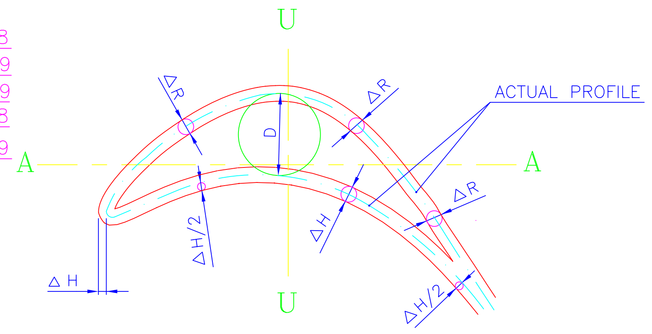

RIGHT BLADE	-01
LEFT BLADE	-00
DIRECTION	VAR

TYPE OF PRODUCT OR NAME OF CUSTOMER/PROJECT

	NAME	SIGN.	DATE	NO.OF VAR.
DRN.	SUZCAD/TVP		10.08.98	-N.A.-
CHD.	TS Prabhakar		10.08.98	
APPD.	M Rosi Babu		10.08.98	

ALTERED	REV.	DATE	ALTERED	REV.	DATE	ALTERED	REV.	DATE	ALTERED	REV.	DATE	ALTERED	REV.	DATE	ALTERED	REV.	DATE	ALTERED	REV.	DATE	ALTERED
CHD/APPD			CHD/APPD			CHD/APPD			CHD/APPD			CHD/APPD			CHD/APPD			CHD/APPD			CHD/APPD
	ZONE			ZONE			ZONE			ZONE			ZONE			ZONE			ZONE		

DEPT. I.T.D. / DEPT. CODE 415	UNTOL. DIMS. GR. ~~C/M/F~~		SCALE N.T.S	WEIGHT (KG) 15.0	REF. TO ASSY. DRG. -N.A.-
TITLE LP MOVING BLADE-3 (NEW 5.0SQM) (F118-150/157-700)			CARD CODE N.A.	DRAWING NO. 1-303-22-20008	REV. 00
				SHT. No 01	NO. OF SHT. 01

ITEM NO. -N.A.- NO.OF ITEMS -N.A.-

GENERAL DIMENSIONAL LIMITS,FITS & TOLERANCES AS PER HY0230261

COMPUTER FILE NAME

REF. DRG. NO. 7651-24553Rev.d

SIGN. AND DATE

INVENTORY NO

FIRST ANGLE PROJECTION

(ALL DIMENSIONS ARE IN mm)

DRG. NO.1-303-22-20010 SH. 01 OF 01

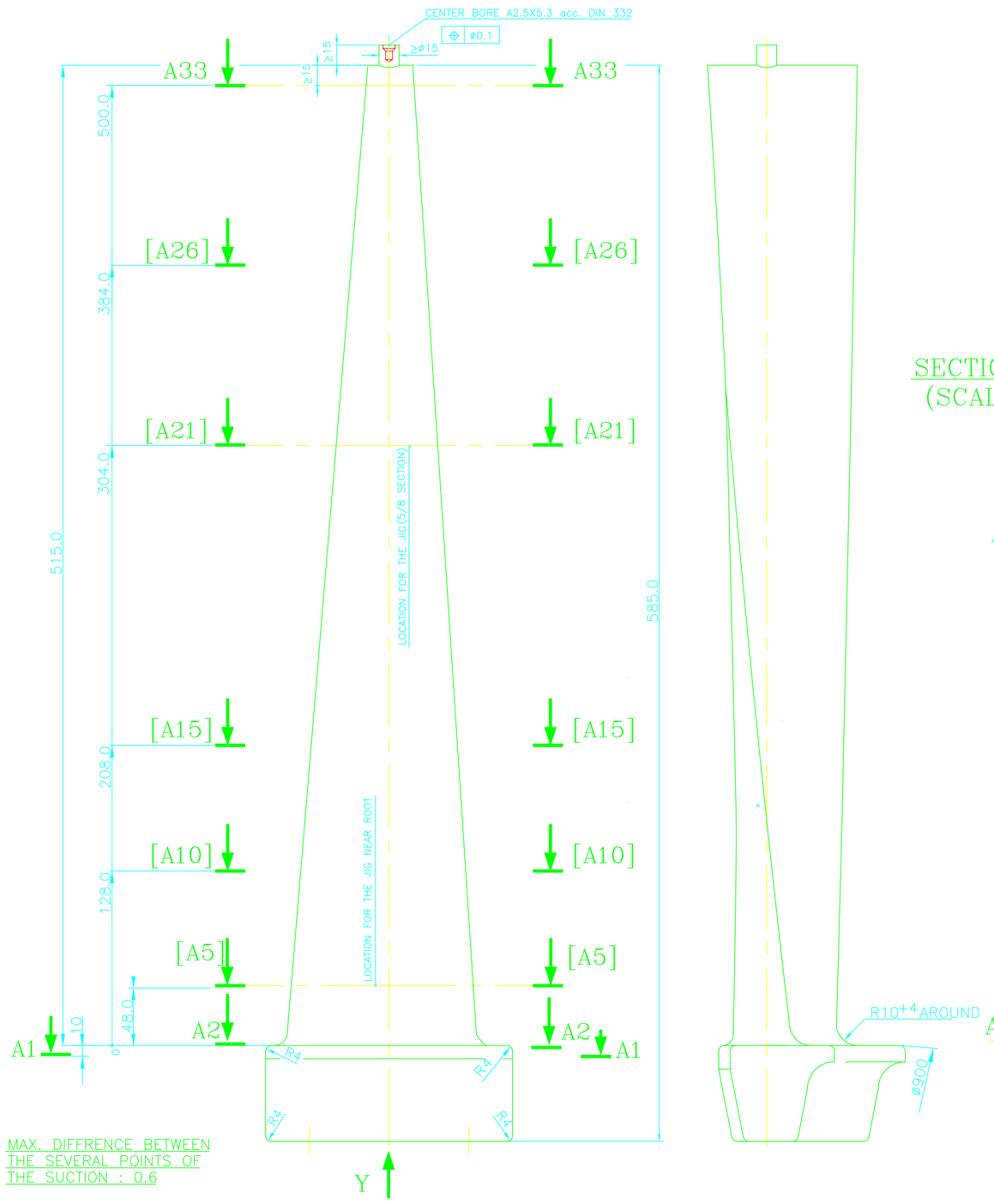

CONTOUR OF THE BASE PLATE
(SCALE 1:1)

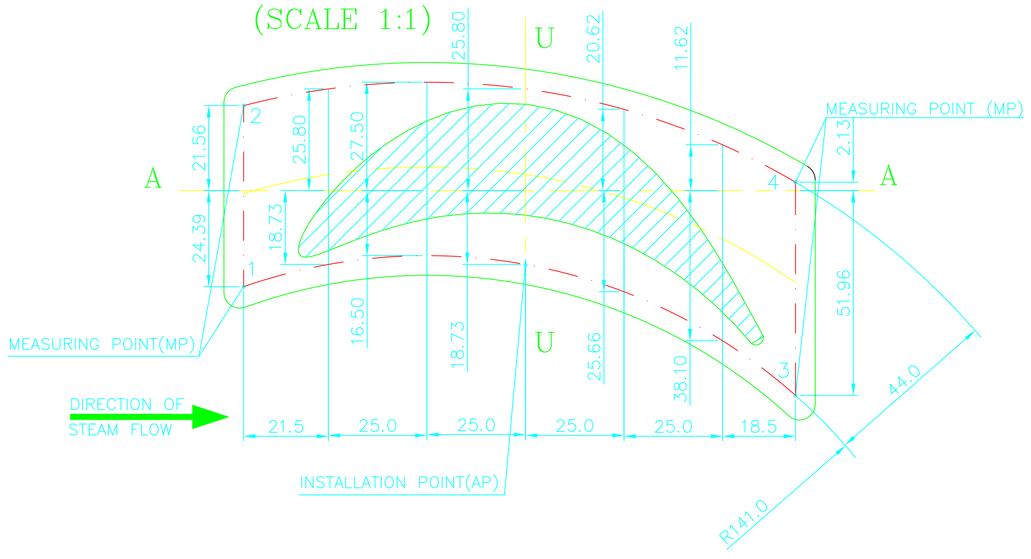

SECTION A26–A26
(SCALE 1:1)

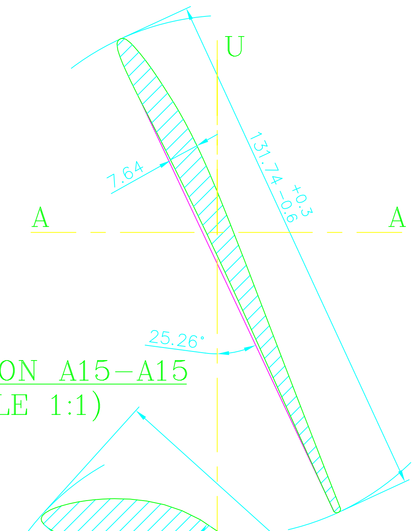

SECTION A15–A15
(SCALE 1:1)

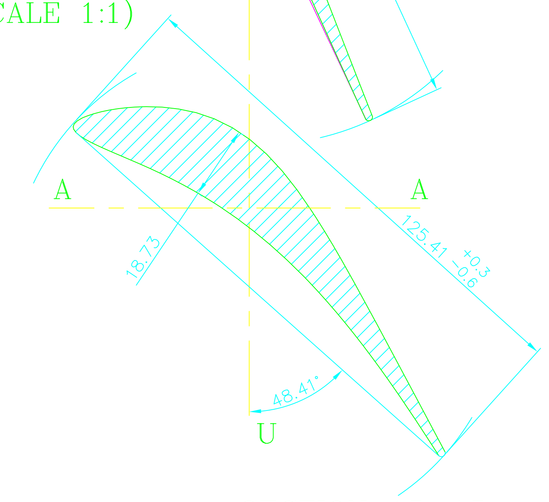

SECTION A5–A5
(SCALE 1:1)

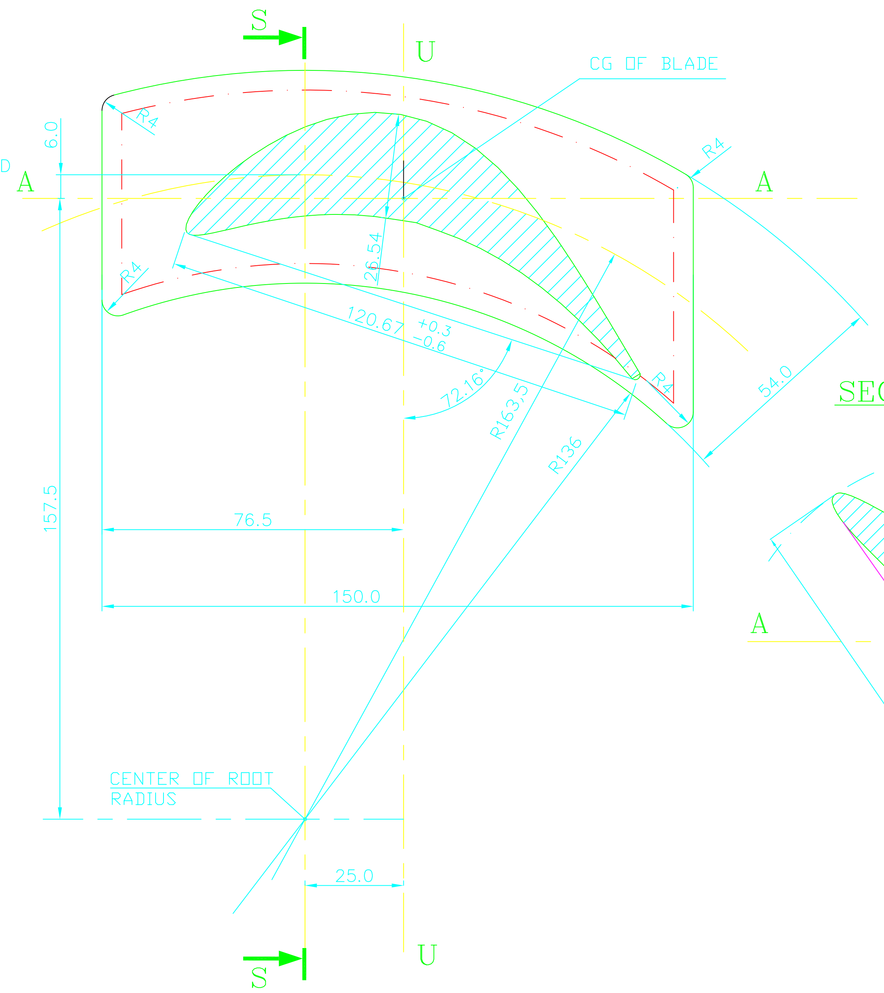

VIEW–Y
(SCALE 1:1)

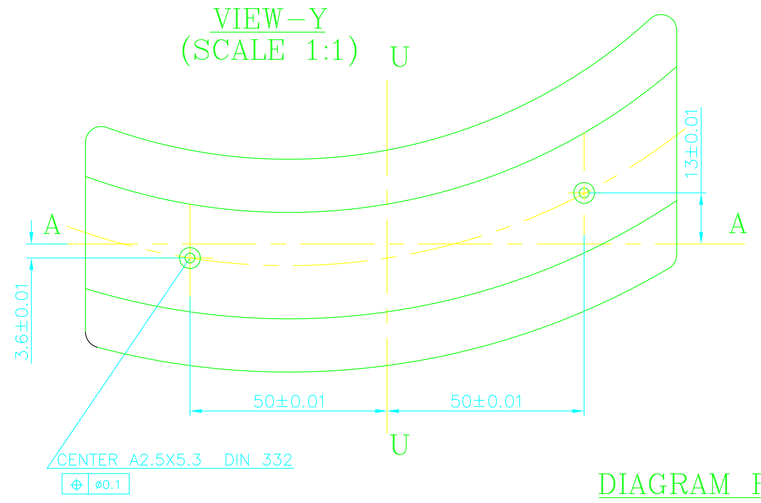

SECTION S–S(SCALE 1:1)

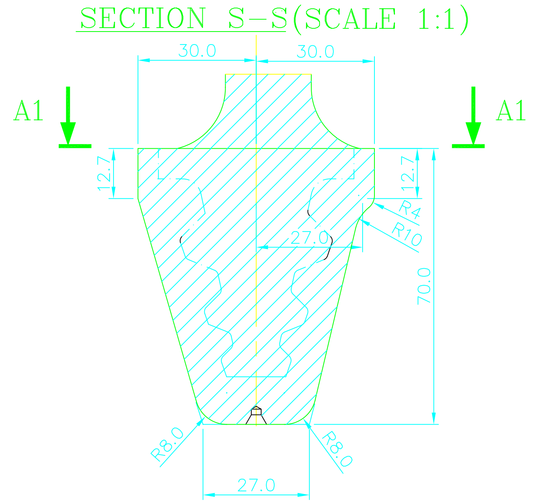

SECTION A21–A21
(SCALE 1:1)

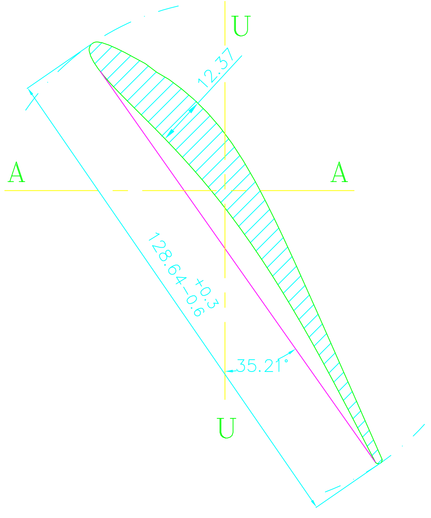

DIAGRAM FOR

LEFT BLADE
VAR : 00

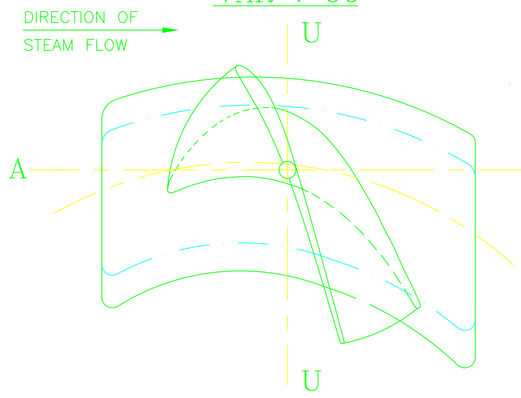

RIGHT BLADE
VAR : 01

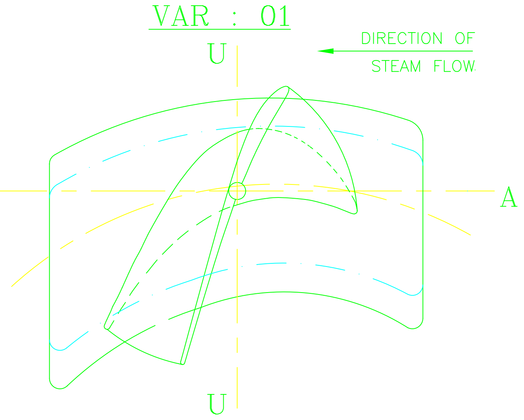

TOLERANCE INTERPRETATION

TOLERANCE VALUES FOR PROFILE:

△R Max	=	1.0
△H Max	=	0.5
Max Diff△R	=	0.5
Σ(△R+△H)Max	=	1.0
△D	=	0.5

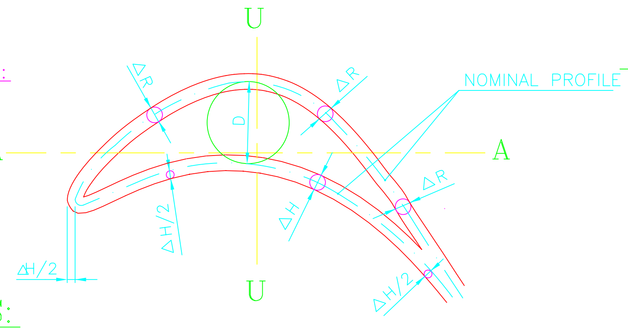

NOTES:

1. SURFACE FINISH FOR THE BLADE:
   PROFILE : 0.8
   INLET AND EXIT EDGE : 0.4
   REMAINING PLACES :
2. TOLERANCE VALUE FOR ROOT: +3
3. ALL UNDIMENSIONED RADII OF THE ROOT ARE R4.
4. PROFILE CO-ORD. AS PER DRG. NO: 0-303-22-00010-00
5. ALL SECTIONS MARKED WITH BRACKETS [ ] ARE TO BE TAKEN AS CHECK SECTIONS FOR INSPECTION OF PROFILE.
6. CENTRE HOLES ARE TO BE MADE WITH RESPECT TO PRESSURE SIDE AND INLET EDGES OF BOTH THE REFERENCE SECTIONS (i.e.NEAR-THE-ROOT & 5/8).INLET EDGES OF BOTH THE SECTIONS ARE TO BE MADE NOMINAL (△H=0 AT INLET)
7. CENTRE HOLES OF SIZE A2.5x5.3 TO BE MADE ACC. TO DIN332. DIFFERENCE BETWEEN THE DEPTH OF CENTRE HOLES AT ROOT NOT TO BE EXCEEDED BY 0.05MM.

RIGHT BLADE	-01
LEFT BLADE	-00
DIRECTION	VAR

GENERAL DIMENSIONAL LIMITS,FITS & TOLERANCES AS PER HY0230261

SIGN. AND DATE | REF. DRG. NO. 0-2128-2203-00/M | Rev:B | COMPUTER FILE NAME | INVENTORY NO

ALTERED	REV.	DATE	ALTERED	REV.	DATE	ALTERED	REV.	DATE	ALTERED	REV.	DATE	ALTERED	REV.	DATE	ALTERED	REV.	DATE	ALTERED	REV.	DATE	ALTERED	REV.	DATE	ALTERED
CHD/APPD			CHD/APPD			CHD/APPD			CHD/APPD			CHD/APPD			CHD/APPD			CHD/APPD			CHD/APPD			CHD/APPD
	ZONE			ZONE			ZONE			ZONE			ZONE			ZONE			ZONE			ZONE		

TYPE OF PRODUCT OR NAME OF CUSTOMER/PROJECT

	NAME	SIGN.	DATE	NO.OF VAR.
DRN.	TS PRABHAKAR		20.05.2005	-N.A.-
CHD.	D.S.RAO		20.05.2005	
APPD.	CNV RAMANA		20.05.2005	

DEPT. I.T.D. DEPT. CODE 415	UNTOL. DIMS. GR. ¢/M/F	SCALE N.T.S;1:1	WEIGHT (KG) 7.7	REF. TO ASSY. DRG. -N.A.-	ITEM NO. -N.A.-	NO.OF ITEMS -N.A.-

TITLE: LP MOVING BLADE FORGING-3 (SL 2.2SQM)

CARD CODE: N.A.

DRAWING NO. 1-303-22-20010 REV. 00

SHT. No 01 NO. OF SHT. 01

FIRST ANGLE PROJECTION

(ALL DIMENSIONS ARE IN mm)

DRG. NO. 2-303-18-20005 | SH.01 OF 01

R

Rt = 12μ or 1.6/▽

NOTES: –

1. DIRECTION OF ROTATION IS CLOCKWISE WHEN SEEN IN THE DIRECTION OF STEAM FLOW.
2. FOR BLADE THICKENING IN SECTION M–M, DRG.NO. 1–30318–00002–07
3. FOR PROFILE COORDINATES OF SECTION A–A TO R–R SEE DRG. NO. 1–30322–00006–00 (4 SHEETS.)
4. MAX. ALLOWABLE LONGITUDINAL OFFSET OF FRONT PROFILE TO BACK PROFILE = 1.0MM.
5. ROOT TOLERANCES AS PER DIN $7526^{+3.3}_{-1.7}$ mm.
6. ROOT DIMENSIONS CONTAIN NO ALLOWANCE FOR THE SLANTING SURFACE OF FORGING.
7. FORGING SLANT SURFACE IN SECTION A–A – 1:10.
8. ALL UNMENTIONED RADII $R=5^{\pm 2.5}$

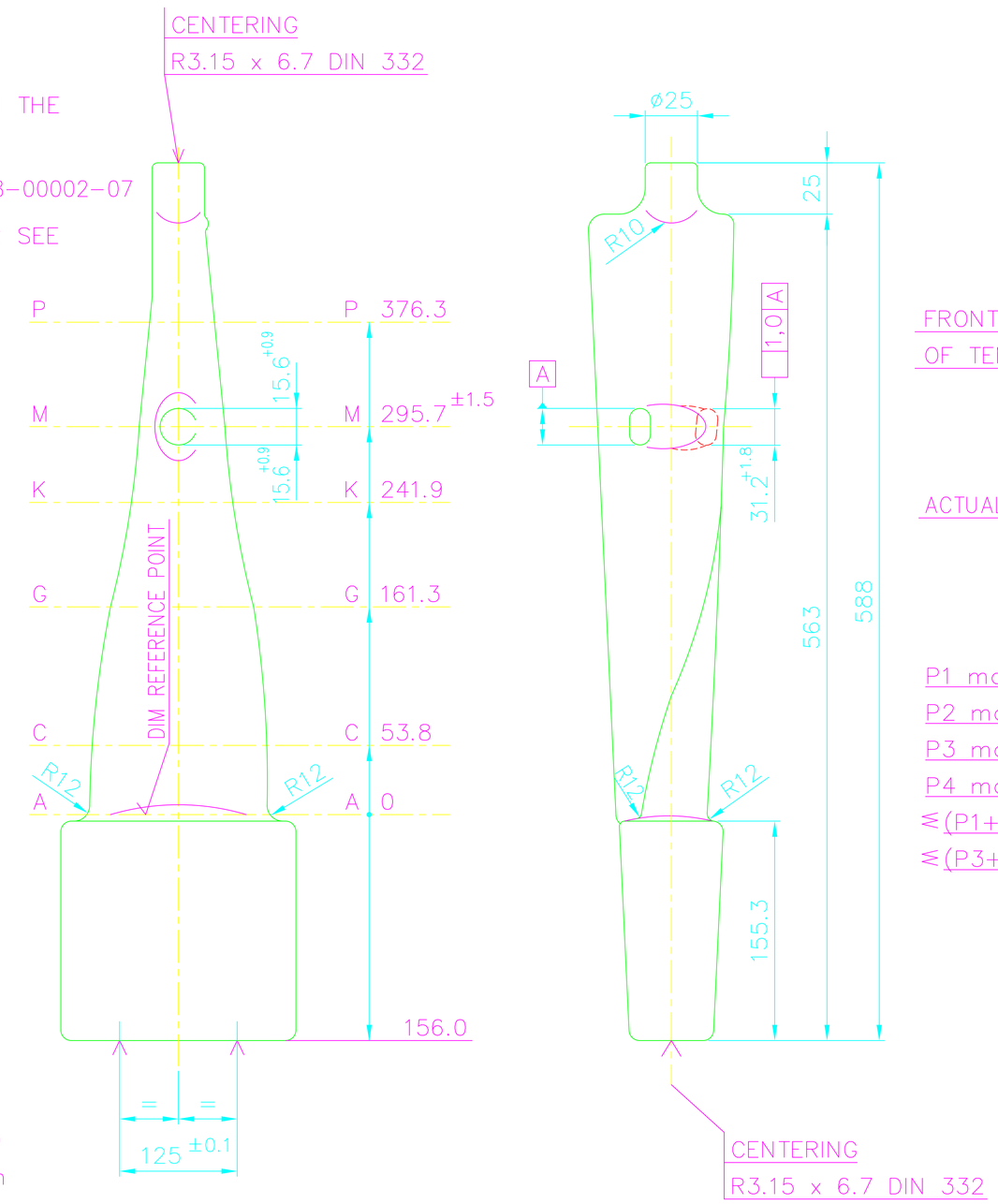

TOLERANCE ON PROFILE SECTIONS

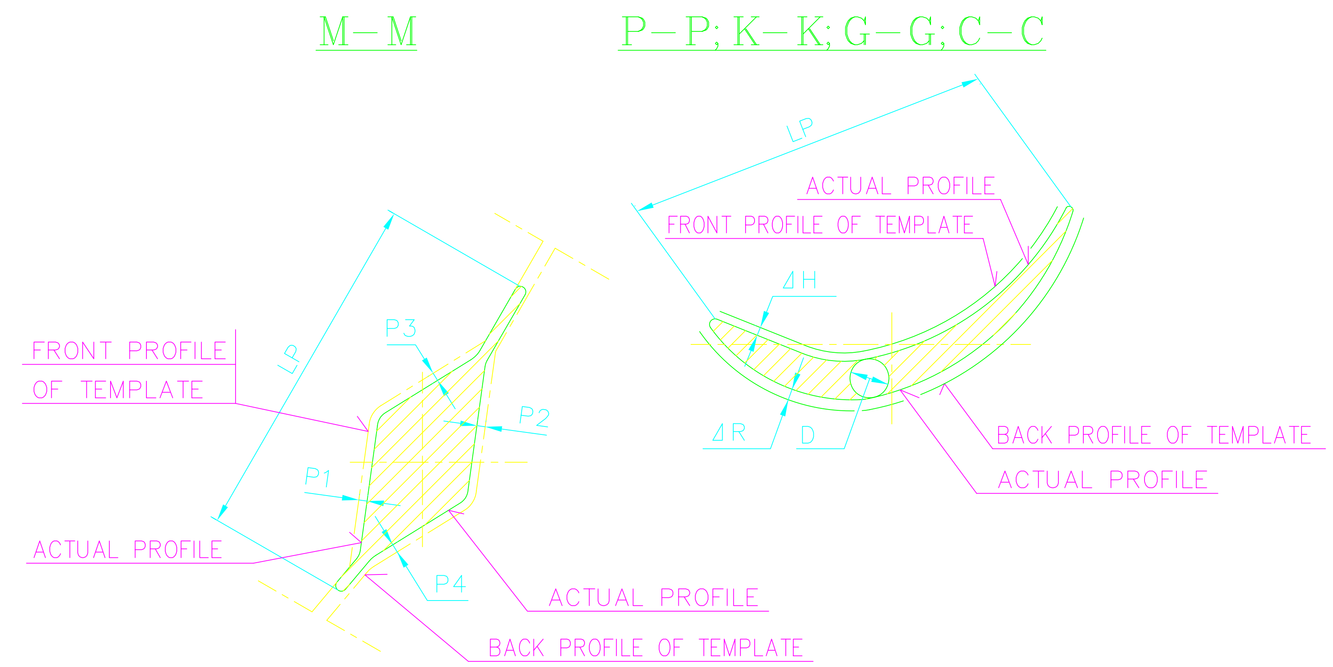

P1 max. = 0.85mm ; min. = 0 mm.
P2 max. = 1.15mm ; min. = 0 mm.
P3 max. = 1.60mm ; min. = 0 mm.
P4 max. = 1.90mm ; min. = 0 mm.
≦(P1+P2)max. = 2.00mm ; min. = 0.3 mm.
≦(P3+P4)max. = 3.50mm ; min. = 0.3 mm.

ΔR max. = 0.9mm; min. = 0 mm.
ΔH max. = 0.3mm; min. = 0 mm.
≦(ΔR+ΔH)max. = 0.9mm; min. = 0.3 mm.
DIFFERENCE. ΔR max. = 0.5mm.
DIFFERENCE IN THE VARIATION OF THICKNESS:
– WITH IN A BLADE = 0.6 mm.
– BETWEEN ADJACENT PROFILES AS PER THE TABLE = 0.5mm.

SECTION	C–C	G–G	K–K	M–M	P–P
D	15.6	10.6	7.9	–	5.1
LP	134.7	124.8	118.8	116.0	114.0

1.6/(▽)Rt=12μ TOLERANCES MENTIONED ARE VALIED FOR ALL PROFILE SECTIONS.

SUPPLY CONDITIONS.

PRECISION FORGED, DEBURRED, HEATTREATED AND DRILLED (Centers), INLET EDGES FINISH MACHINED AND OUT LET EDGES ARE TO BE EXTENDED UP TO 3^{+5}_{-0} mm OVER FINAL DIMENSIONS.

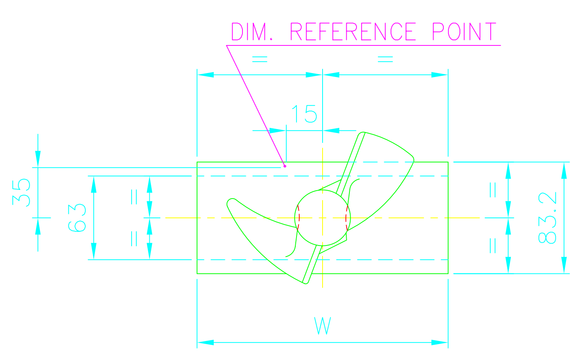

MATERIAL : X20 Cr 13.
HEAT TREATMENT $\sigma_{0.2} \geqq 60$ kp/mm²

146	–01
173	–00
W	VAR

TYPE OF PRODUCT OR NAME OF CUSTOMER/PROJECT

	NAME	SIGN.	DATE	NO.OF VAR.
DRN.	BICT\TVP		15.12.97	NA
CHD.	T.S.PRABHAKAR		15.12.97	
APPD.	M.ROSIBABU		15.12.97	

DEPT. I.T.D. CODE 415	UNTOL. DIMS. GR. ~~C/M/F~~	SCALE NTS	WEIGHT (KG) 22.2	REF. TO ASSY. DRG. –N.A.–	ITEM NO. –N.A.–	NO.OF ITEMS –N.A.–

TITLE L.P. MOVING BLADE LK/SK/HK 90–3R

CARD CODE N.A.

DRAWING NO. 2–303–18–20005 REV. 02

SHT. No 01 NO. OF SHT. 01

REV.	DATE	ALTERED	REV.	DATE	ALTERED	REV.	DATE	ALTERED	REV.	DATE	ALTERED	REV.	DATE	ALTERED
		CHD/APPD			CHD/APPD			CHD/APPD	02	5.5.96	TSP. CHD/APPD TSP.	01	15.11.85	TSP. CHD/APPD PNR
ZONE			ZONE			ZONE			ZONE		VAR 01 ADDED DRG MADE ON CAD.	ZONE B–2		IN NOTE 2. DRG. NO. 1–30318 00002–07 WAS 1–30318 00002–00.

GENERAL DIMENSIONAL LIMITS, FITS & TOLERANCES AS PER HY023026

COMPUTER FILE NAME C3182005.DWG

Rev:E

REF. DRG. NO. 5–1372–0162–00

SIGN. AND DATE

INVENTORY NO

FIRST ANGLE PROJECTION

(ALL DIMENSIONS ARE IN mm)

DRG. NO. 2 - 303 - 21 - 20001

2-11-3301

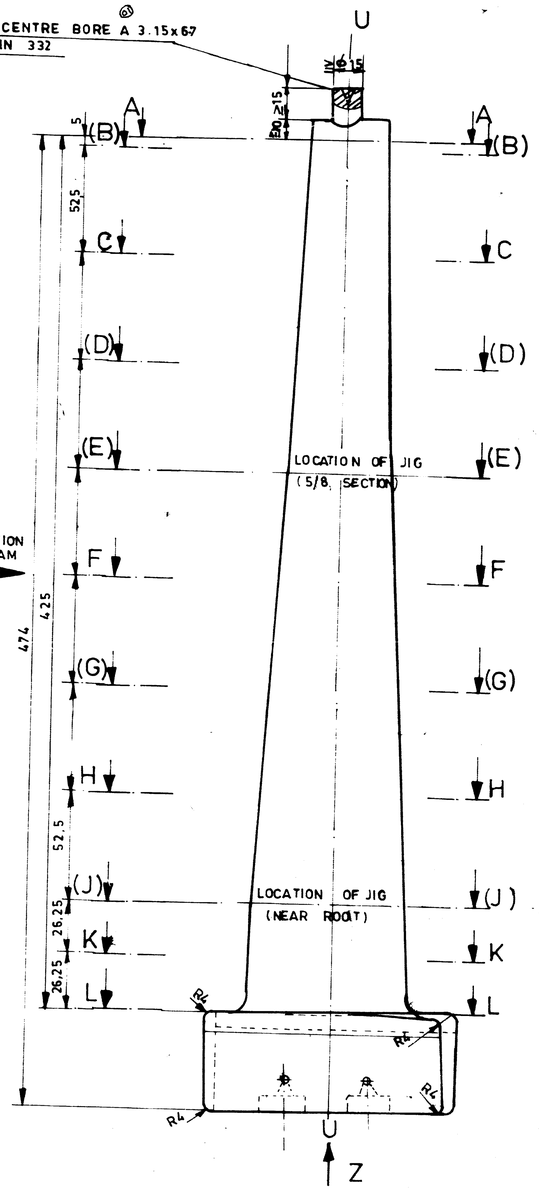

( ): CHECKING (INSPECTION) SECTIONS

NOTE:- 1. OUT LET AND INLET EDGES OF PROFILES ARE TO BE SUPPLIED IN FINISHED CONDITION
2. PROFILE CO-ORDINATES AS PER 3-303-21-00001-00 (11Sh)
(3-11-4993 11Sh)

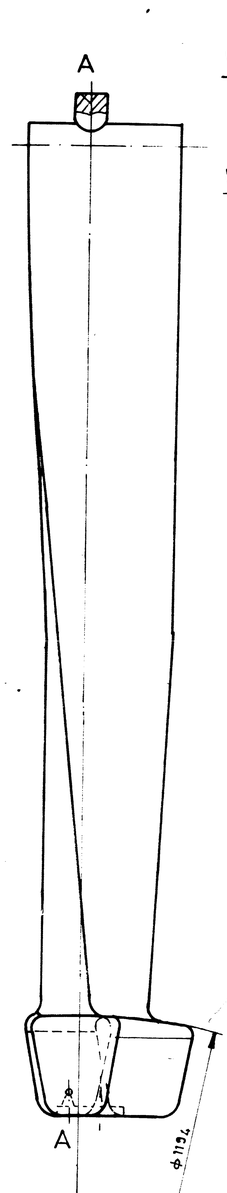

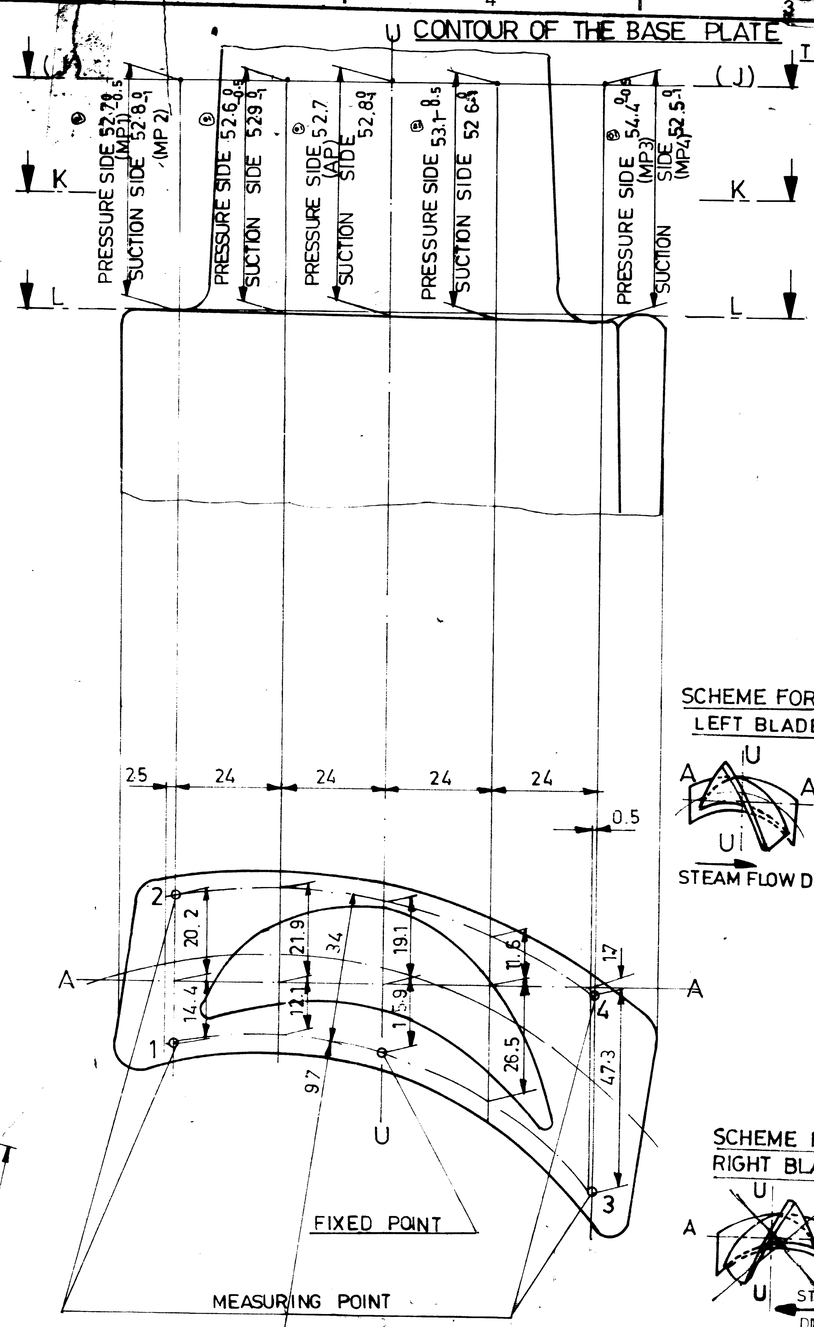

VIEW- Z

CENTRE BORE A 3.15x6.7

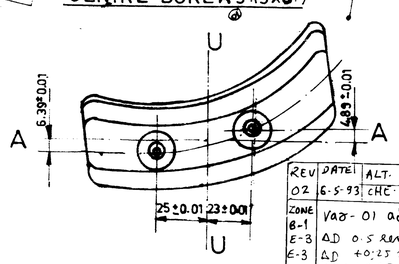

TOLERANCE INTERPRTATION

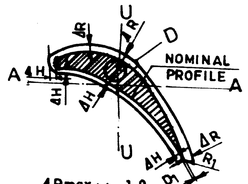

ΔRmax : 1.0
ΔHmax : 0.5
Σ(ΔR+ΔH)max: 1.0
max. DIFF ΔR: 0.5

ΔD1: + 0.25

1 ΔD PERMISSIBLE TOLLERANCE OF PROFILE THICKNESS OVER THE INLET EDGE TO THE LOCATION OF MAX THICKNESS 'D'

2 ΔD1 PERMISSIBLE TOLLERANCE OF OUTLET EDGE THICKNESS

3 THE TOLERANCE ON THICKNESS SHOULD VARY LINEARLY BETWEEN 'D' AND OUTLET EDGE

TOLERANE FOR THE BLADE PROFILE POPTION SURFACE FINISH OF BLADE PROFILE Ra ≤ 12

SEC.	ΔD UPPER LIMITS	ΔD LOWER LIMITS
A-A	0.0	-0.8
B-B	0.0	-0.8
C-C	+0.1	-0.7
D-D	+0.2	-0.6
E-E	+0.3	-0.5
F-F	+0.4	-0.4
G-G	+0.5	-0.3
H-H	+0.6	-0.2
J-J	+0.7	-0.1
K-K	+0.75	-0.05
L-L	+0.8	0.0

SECTION B-B

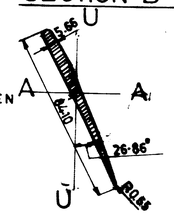

SECTION 'M-M'

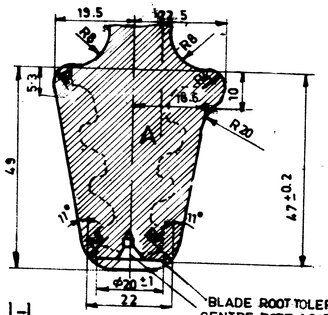

BLADE ROOT TOLERENCE: CENTRE BORE A3.15x6.7 DIN 332 PERMISSIBLE DIFFERENCE IN BORE DEPTHS 0.05

SECTION E-E

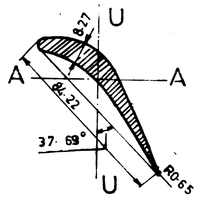

SCHEME FOR LEFT BLADE

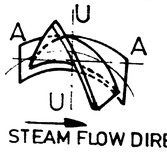

STEAM FLOW DIRECTION

SCHEME FOR RIGHT BLADE

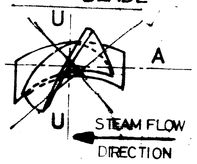

SECTION- J-J

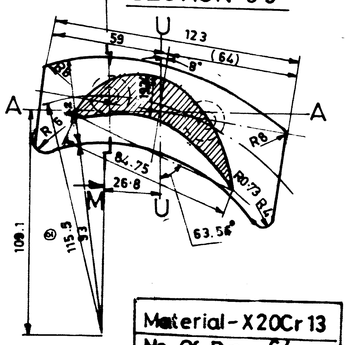

Material - X20Cr 13	230324-00051-00 -01
No. Of Pcs. - 64	— N.A. — -00
Weight - 4.0 Kg	BOSS ON PROFILE DRG. NO. VAR.

REV	DATE	ALT.	
02	6-5-93	CHE.	

ZONE — VAR-01 added
B-1 — ΔD 0.5 removed
E-3 — ΔD +0.25 made as ΔD1 +0.25
E-3 — ΔD1 in note 2 was ΔD.

REV.	DATE	ALTERED	
01	8-9-83	CHECKED	

ZONE — DRG. RETRACED, ALL VIEWS REPLACED
F-5 — DIMENSIONS FOR PR. & SUC. SIDES CHANGED
B-2 — DIM. 115.3 & 115.5
F-7 — CENTRE BORE CHANGED FROM R3.15x6.7 TO A3.15x6.7

ADDITIONAL INFORMATION

STATUS OF DRAWING

DISTRIBUTION OF PRINTS

TYPE OF PRODUCT OR NAME OF CUSTOMER / PROJECT

	NAME	SIGN.	DATE	
DRN.	LWC		8/9/83	NO. OF VAR.
CHD.	TSP		8-9-83	
APPD.	P.N.R.		8-9-83	

DEPT.	GRADE OF TOL. DIM. C/M/F	SCALE	WEIGHT (KG)	REF. TO ASSY. DRG.	ITEM NO.	NO. OF ITEMS
CODE						

TITLE

MOVING BLADE (BZ)-II

F 24-84/84-420

CARD CODE

DRAWING NO. ~~2-11-3301~~ 2-303-21-20001-XX VAR. REV. 02

SHEET NO. 1 NO. OF SHEETS 1

TD-150-REV. NO. 1

SIZE A2

THE INFORMATION ON THE DOCUMENT IS THE PROPERTY OF BHARAT HEAVY ELECTRICALS LIMITED.
IT MUST NOT BE USED DIRECTLY OR INDIRECTLY IN ANY WAY DETRIMENTAL TO THE INTREST OF THE COMPANY.

2-11-3301, ST18337 REF. DRG. NO.

SIGN. AND DATE

INVENTORY NO.

FIRST ANGLE [redacted]CTION)

(ALL DIMENSIONS ARE IN mm)

DRG. NO. 2-303-22-20001

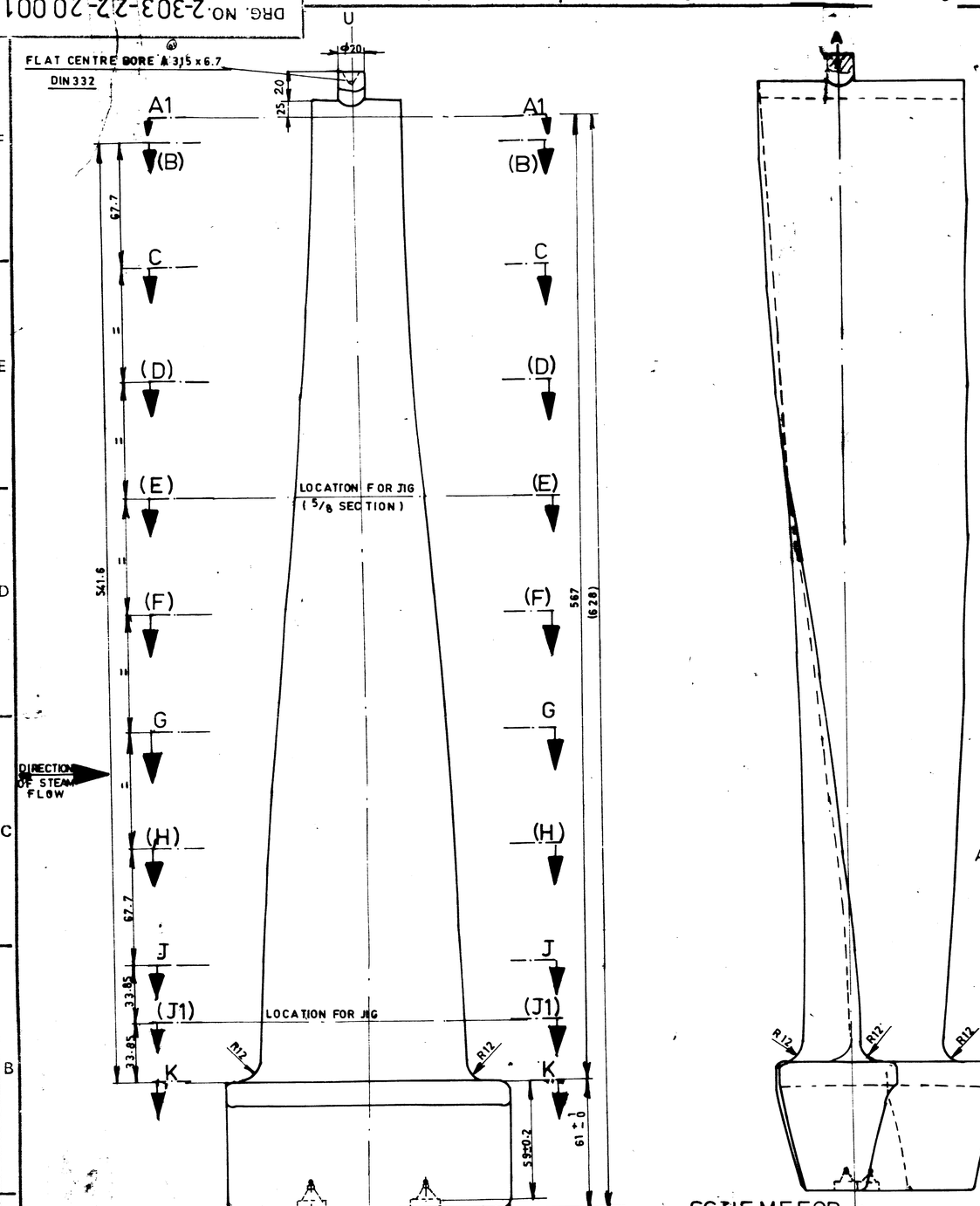

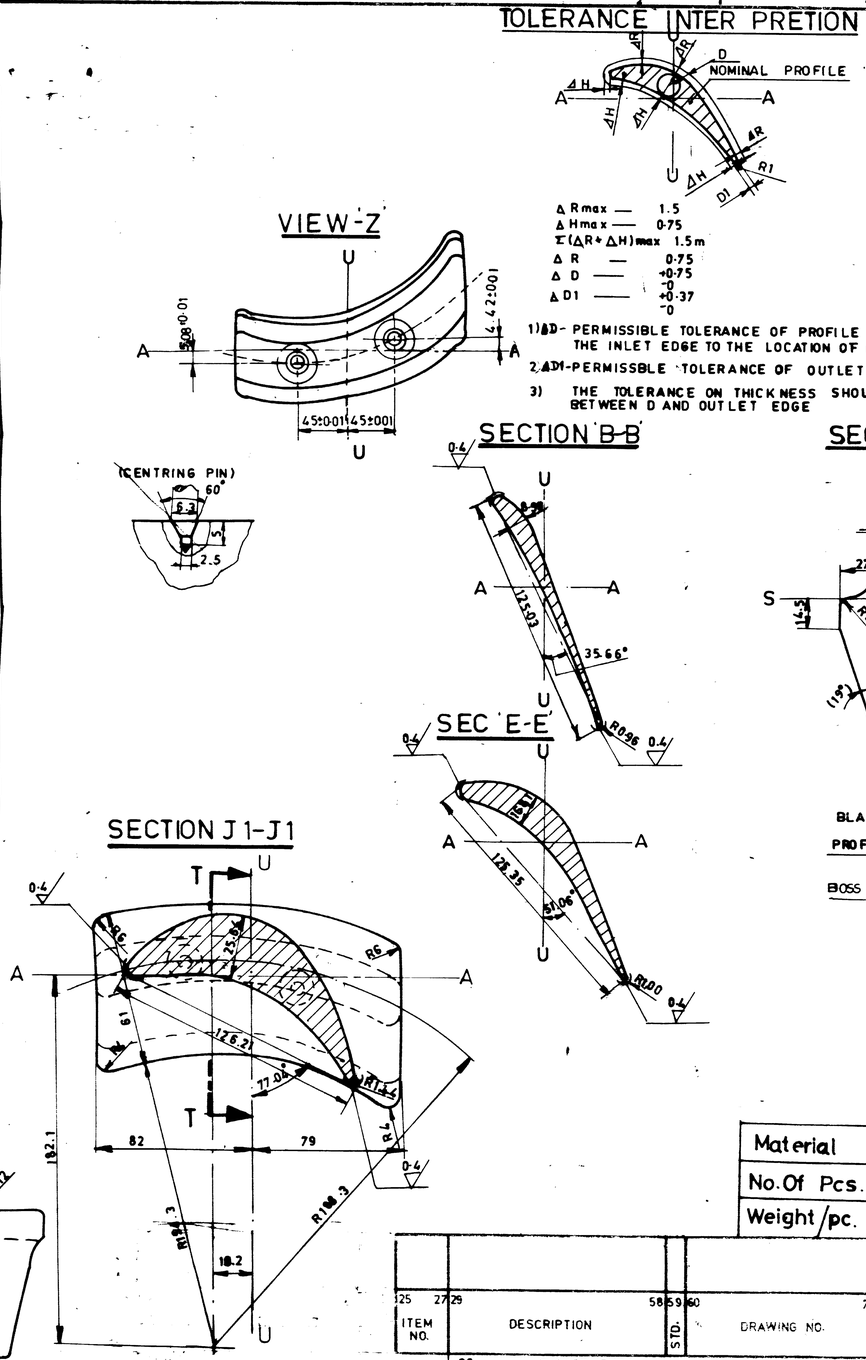

Material	X20Cr13-V
No. Of Pcs.	48
Weight /pc.	10.0 Kg

SCHEME FOR A

LEFT BLADE C-1

RIGHT BLADE C-2

DIRECTION OF STEAM FLOW

ALL UNMENTIONED RADII R4

( ): CHECKING (INSPECTION) SECTIONS

INLET OUTLET EDGE TO BE FINISH CONDITION

ITEM NO.	DESCRIPTION	STD.	DRAWING NO.	IT. NO. / VAR.	MATL. CODE / MATL. SPECN.	UNIT	UNIT WT / QTY.
25 27	29 58	59	60 77	29 32	34 45	55 56 57	58 66

28 → CARD TYPE -2 28 → CARD TYPE -3

ADDITIONAL INFORMATION

STATUS OF DRAWING

DISTRIBUTION OF PRINTS

TYPE OF PRODUCT OR NAME OF CUSTOMER / PROJECT

	NAME	SIGN.	DATE
DRN.	K.A.		
CHD.	T.S.P.	T.S.P.	12.9.83
APPD.	P.N.R.		12.9.83

REV.	DATE	ALTERED / CHECKED
DONE F-8	12.9.83	DRAWING RETRACED. CENTRE BORE CHANGED FROM R 3.15 x 6.7 TO A 3.15 x 6.7

DEPT.	GRADE OF TOL. DIM. C/M/F	SCALE	WEIGHT (KG)	REF. TO ASSY. DRG.	ITEM NO.
II D / CODE 415					

TITLE MOVING BLADE FORGING (PRECISION) BZ F 46-125/125-550 III L

CARD CODE

DRAWING NO. ~~2-11-3302~~ 2-303-22-20001 Rev 01

SHEET NO. 1 NO. OF SHEETS 1

THE INFORMATION ON THE DOCUMENT IS THE PROPERTY OF BHARAT HEAVY ELECTRICALS LTD. IT MUST NOT BE USED DIRECTLY OR INDIRECTLY IN ANY WAY DETRIMENTAL TO THE INTREST OF THE COMPANY.

2.11-3302, ST 19463 REF. DRG. NO.

SIGN. AND DATE

INVENTORY NO.

FIRST ANGLE PROJECTION

(ALL DIMENSIONS ARE IN mm)

DRG. No. 2-303-22-20002

SH.01 OF 01

Rt = 12 OR 1,6

TOLERANCE ON PROFILE SECTIONS.

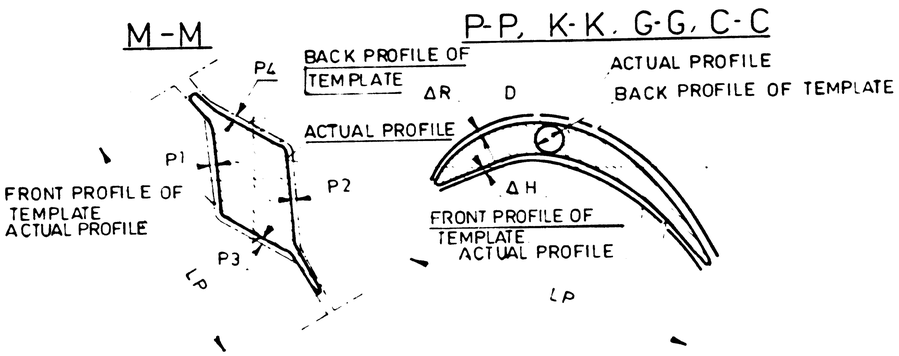

P1 max = 0,75 mm ; min = 0 mm
P2 max = 0,95 mm, min = 0 mm
P3 max = 0,60 mm, min = 0 mm
P4 max = 0,80 mm ; min = 0 mm
Σ(P1+P2) max = 1,70 mm ; min = 0.2 mm
Σ(P3+P4) max = 1,40 mm ; min = 0,2 mm

ΔR max = 0,6 mm, min = 0 mm
ΔH max = 0 2 mm ; min = 0 mm

Σ(ΔR+ΔH) max = 0,6 mm ; min = 0,2 mm

DIFFERENCE ΔR max = 0,4 mm
DIFFERENCE IN THE VARIATION OF THICKNESS WITHIN A BLADE = 0 4 mm
BETWEEN ADJACENT PROFILES AS PER THE TABLE = 0.3 mm

SECTION	C-C	G-G	K-K	M-M	P-P
D	6.3	4,3	3,2	—	2,1
LP	53,9	49.9	47,5	46,4	45,6

Rt = 12 TOLERANCES MENTIONED ARE VALID FOR ALL PROFILE SECTIONS

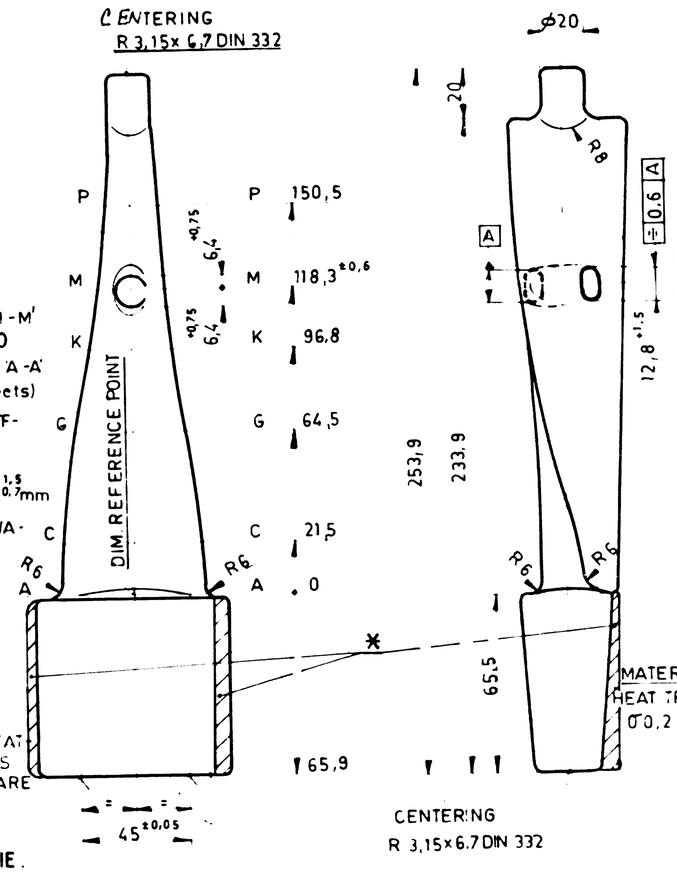

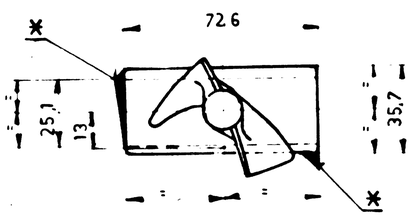

NOTES :-

1. DIRECTION OF ROTATION IS ANTI-CLOCKWISE WHEN SEEN IN THE DIRECTION OF STEAM FLOW.
2. FOR BLADE THICKENING IN SECTION 'M-M' DRG. No. ~~1-11-2311~~ 1-303-18-00002-00
3. FOR PROFILE COORDINATES OF SECTION 'A-A' TO R-R SEE DRG No ~~1-11-2427~~ 1-303-22-00004-00 (4 Sheets)
4. MAX. ALLOWABLE LONGITUDINAL OFF-SET OF FRONT PROFILE TO BACK PROFILE = 0,7 mm.
5. ROOT TOLERANCES AS PER DIN 7526 $^{+1,5}_{-0,7}$ mm
6. ROOT DIMENSIONS CONTAIN NO ALLOWANCE FOR THE SLANTING SURFACE OF FORGING.
7. FORGING SLANT SURFACE IN SECTION 'A-A' 1 10.
8. ALL DIMENTIONED RADII R = $3^{\pm 1,5}$

SUPPLY CONDITIONS.

PRECISION FORGED, DUBURRED HEATTREATED AND DRILLED (Centers), INLET EDGES FINISH MACHINED AND OUT LET EDGES ARE TO BE EXTENDED UP TO 2 $^{+1}_{-0}$ mm OVER FINAL DIMENSIONS.

9. ✱ EXCESS MATERIAL AS PER FORGING DIE.

MATERIAL X20 Cr13
HEAT TREATMENT :
σ0,2 ≥ 60kp/cm²

| | | |

FIRST ANGLE PROJECTION

(ALL DIMENSIONS ARE IN mm)

DRG. No. 2-303-22-20003

SHOP OF 01

Rt ≦ 12 μ or 1,6

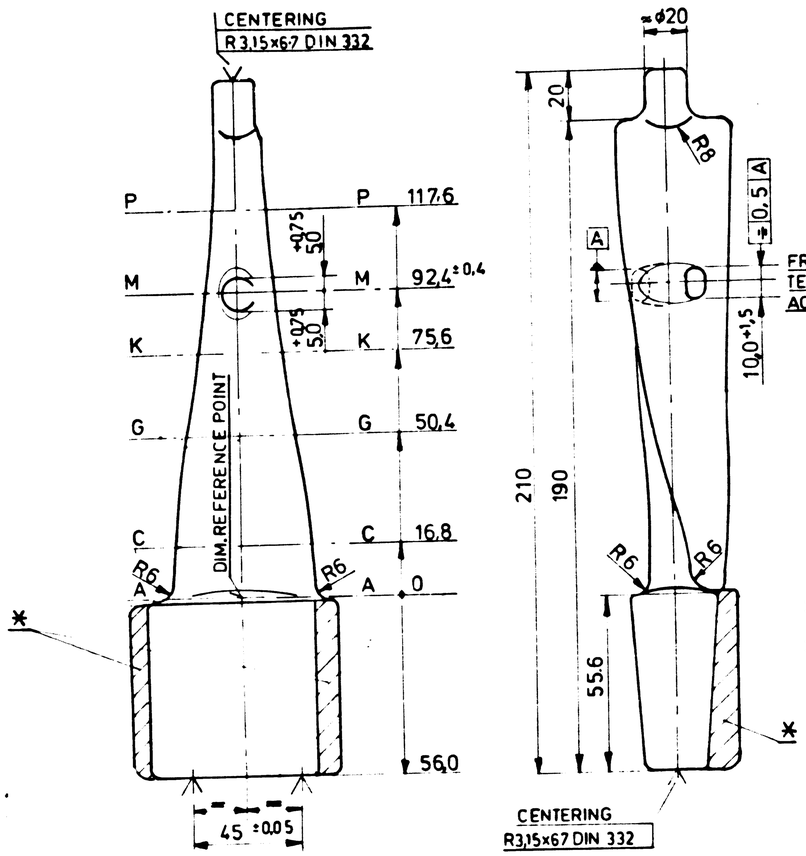

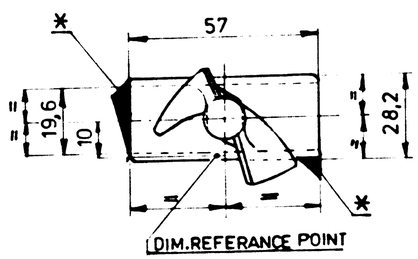

SECTION	C-C	G-G	K-K	M-M	P-P
D	4,9	3,3	2,5	—	1,6
LP	42,1	39,0	37,2	36,3	35,7

TOLERANCE ON PROFILE SECTIONS

M – M

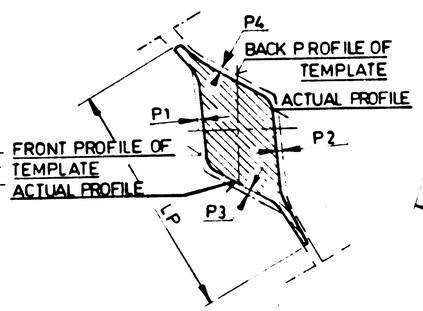

P-P ; K-K ; G-G ; C-C

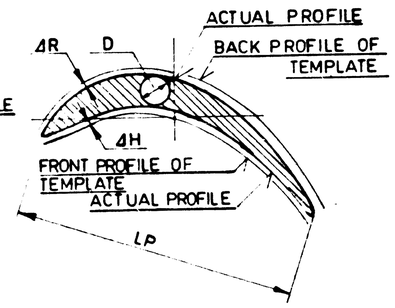

P1 max = 0,75 mm ; min = 0 mm

P2 max = 0,95 mm ; min = 0 mm

P3 max = 0,50 mm ; min = 0 mm

P4 max = 0,70 mm ; min = 0 mm

Σ(P1 + P2) max = 1,70 mm ; min = 0,2 mm

Σ(P3 + P4) max = 1,20 mm ; min = 0,2 mm

ΔR max = 0,6 mm ; min = 0 mm

ΔH max = 0,2 mm ; min = 0 mm

Σ(ΔR + ΔH) max = 0,6 mm ; min = 0,2 mm

Difference ΔR max = 0,4 mm

Difference in the variation of thickness with in a blade = 0,4 mm

Between adjacent profiles as per the table = 0,3 mm

NOTES

1. DIRECTION OF ROTATION IS CLOCKWISE WHEN SEEN IN THE DIRECTION OF STEAM FLOW
2. FOR BLADE THICKENING IN SECTION M-M DRG NO. ~~(1-11-2311)~~ 1-303-18-00002-00
3. FOR PROFILE COORDINATES OF SEC. A-A TO R-R SEE DRG NO. ~~(2-11-2310)~~ 2-303-22-00009-00
4. Max. ALLOWBLE LONGITUDINAL OFFSET OF FRONT PROFILE TO BACK PROFILE = 0,7 mm
5. ROOT TOLERANCES AS PER DIN 7526 $^{+1,3}_{-0,7}$
6. ROOT DIMENSIONS CONTAIN NO ALLOWANCE FOR THE SLANTING SURFACE OF FORGING.
7. FORGING SLANT SURFACE IN SEC A-A 1:10
8. ALL UNMENTIONED RADII R = 3 ± 1,5

   $\sigma_{0.2} \leq 50$ kp/mm²
9. * EXCESS MATERIAL AS PER FORGING DIE.

00

Var.

| | | |

FIRST ANGLE PROJECTION

(ALL DIMENSIONS ARE IN mm)

DRG. No. 2303-22-20005

SH. 01 OF 01

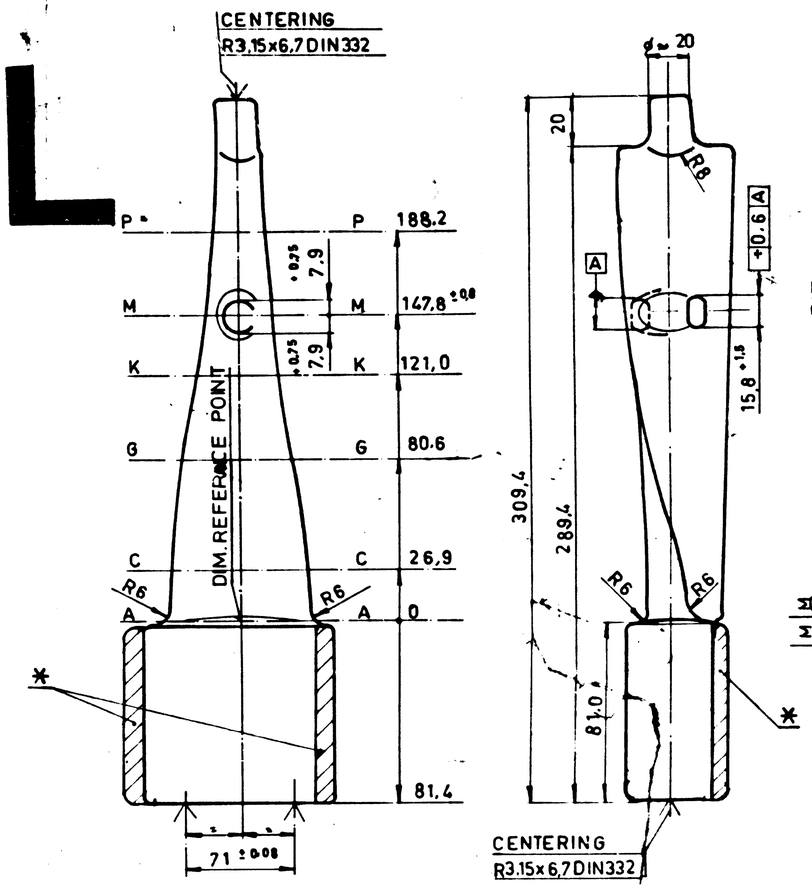

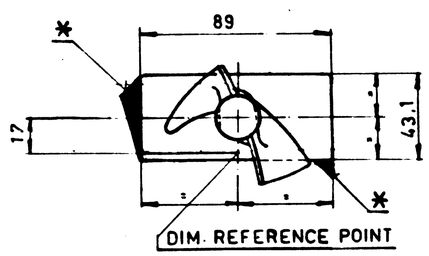

Rt = 12 μ or 1.6

TOLERANCE ON PROFILE SECTIONS.

M-M

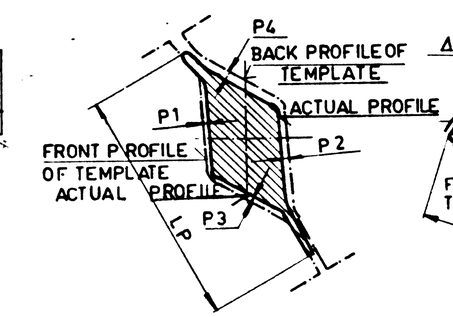

P-P ; K-K ; G-G ; C-C

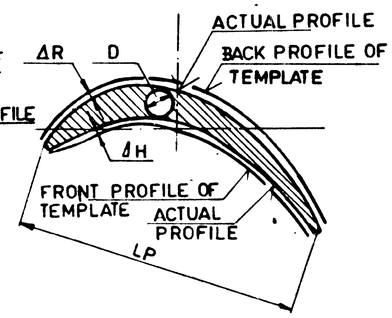

P1 max. = 0.75 mm. ; min. = 0	mm
P2 max. = 0.95 mm. ; min. = 0	mm.
P3 max = 0.80 mm ; min = 0	mm
P4 max = 1.00 mm ; min = 0	mm
Σ(P1+P2) max = 1.70 mm ; min = 0,2	mm
Σ(P3+P4) max = 1.80 mm ; min. 0,2	mm

ΔR max. = 0.6 mm ; min. = 0 mm.

ΔH max. = 0.2 mm ; min. = 0 mm.

Σ(ΔR+ΔH) max. = 0.6 mm. min. = 0.2 mm.

DIFFERENCE ΔR max = 0.4 mm.

DIFFERENCE IN THE VARIATION OF THICKNESS WITH IN A BLADE = 0.4 mm. BETWEEN ADJACENT PROFILES AS PER THE TABLE = 0.3 mm.

NOTES :-

1. DIRECTION OF ROTATION IS ANTI CLOCKWISE WHEN SEEN IN THE DIRECTION OF STEAM FLOW.
2. FOR BLADE THICKENING IN SECTION M-M. DRG NO ~~(1-11-2311)~~ 1-303-18-00002-02
3. FOR PROFILE COORDINATES OF SECTION A-A TO R-R SEE DRG NO ~~(1-11-2448 (4 Sheets))~~ 1-303-22-00001-00 4 Shs.
4. MAX ALLOWABLE LONGITUDINAL OFFSET OF FRONT PROFILE TO BACK PROFILE = 0.7 mm.
5. ROOT TOLERANCES AS PER DIN 7526 $\pm^{1.9}_{0.9}$ mm
6. ROOT DIMENSIONS CONTAIN NO ALLOWANCE FOR THE SLANTING SURFACE OF FORGING.
7. FORGING SLANT SURFACE IN SECTION A-A 1:10
8. ALL UNMENTIONED RADDI R = 3 ± 1.5
9. ✱ EXCESS MATERIAL AS PER FORGING DIE.

MATERIAL X 20Cr 13

HEAT TREATMENT $\sigma_{0.2} \geq 60$ Kp/mm²

SUPPLY CONDITIONS.

PRECISION FORGED DUBURRED HEATTREATED AND DRILLED (Centers) INLET EDGES FINISH MACHINED AND OUTLET EDGES ARE TO BE EXTENDED UP TO 2^{+6}_{0} mm OVER FINAL DIMENSIONS.

SECTION	C-C	G-G	K-K	M-M	P-P
D	7.8	5.3	3.9	—	2.6
L P	67.4	62.4	59.4	58.0	57.0

GENERAL DIMENSIONAL LIMITS FITS & TOLERANCES AS PER P.S. HY-033261

(1.6) Rt = 12 μ TOLERANCES MENTIONED ARE VALID FOR ALL PROFILE SECTIONS.

-00 Var.

QTY	QTY	QTY	QTY	No OF	UNIT OF QTY	DESCRIPTION	ITEM No	STD	DRAWING No	IT.No	MATERIAL CODE	A C	COMP GROUP	UNIT WEIGHT (Kg)	DI	ZONE
VARIANT 00	VARIANT 02	VARIANT 01	VARIANT 00	VARIANT	RM UNIT QTY					VARIANT	MATERIAL SPECN			QUANTITY		

CARD TYPE 2 — CARD TYPE 1

ADDITIONAL INFORMATION

STATUS OF DRAWING

DISTRIBUTION OF PRINTS

TYPE OF PRODUCT OR NAME OF CUSTOMER/PROJECT

M F

REV	DATE	ALTERED	CHECKED
01	30.11.94		

S.No. 9. ✱ MAT. ADDED.

DEPT	CODE	SCALE	WEIGHT (KG)	REF TO ASSY DRG.	ITEM No.
I.T.D.	415	NTS	3.0	-NA-	

TITLE

MOVING BLADE SK/HK 453 L

	NAME	SIGN.	DATE
DRAWN	Vasanta		3-1-80
CHECKED			3-1-80
APPROVED			3-1-80

DIMENSIONS TO BE CONTROLLED WITHIN LIMITS AS SHOWN. MACHINING TOLERANCE 25mm UNLESS OTHERWISE SHOWN. NON-MACHINING TOLERANCE 5 — 1372 — 0052 — 00

CARD CODE

DRAWING No 2-303-22-20005

REV. 01

SHEET No 01 OF SHEETS 01

SIZE A2

THE INFORMATION ON THIS DOCUMENT IS THE PROPERTY OF BHARAT HEAVY ELECTRICALS LIMITED. IT MUST NOT BE USED DIRECTLY OR INDIRECTLY IN ANY WAY DETRIMENTAL TO THE INTEREST OF THE COMPANY.

REF. DRG. No.

SIGN AND DATE

INVENTORY No

FIRST ANGLE PROJECTION (ALL DIMENSIONS ARE IN mm)

DRG. No. 2-303-22-20007-XX

Rt = 2 μ OR 1.6

TOLERANCE ON PROFILE SECTIONS

NOTES :-

1. DIRECTION OF ROTATION IS ANTICLOCK-WISE WHEN SEEN IN THE DIRECTION OF STEAM FLOW.
2. FOR BLADE THICKENING IN SECTION 'M-M' DRG. No. (~~1-11-2311~~) 1-303-18-00002-00
3. FOR PROFILE COORDINATES OF SECTION 'A-A' TO 'R-R' SEE DRG No (~~1-11-27404 Sheets 1~~) 1-303-22-00002-00 4Shs
4. MAX. ALLOWABLE LONGITUDINAL OFF-SET OF FRONT PROFILE TO BACK PROFILE = 0.7 mm
5. ROOT TOLERANCES AS PER DIN 7526 $^{+2.4}_{-1.2}$ mm
6. ROOT DIMENSIONS CONTAIN NO ALLOWANCE FOR THE SLANTING SURFACE OF FORGING.
7. FORGING SLANT SURFACE IN SECTION A-A 1 : 10
8. ALL DIMENTIONED RADII R = $4^{\pm 2}$

SUPPLY CONDITIONS

PRECISION FORGED, DUBURRED, HEATTREATED AND DRILLED (Centers), INLET EDGES FINISH MACHINED AND OUTLET EDGES ARE TO BE EXTENDED UP TO 3^{+5}_{-0} mm OVER FINAL DIMENSIONS.

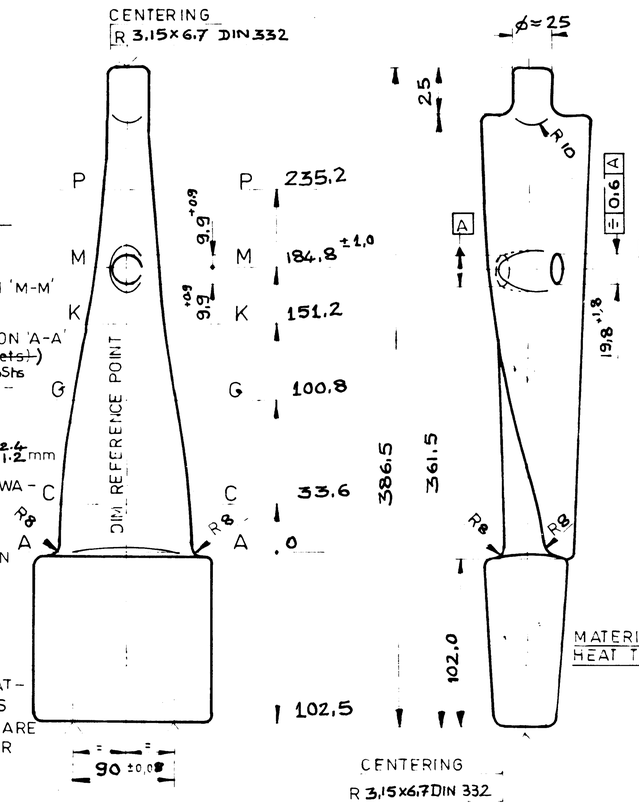

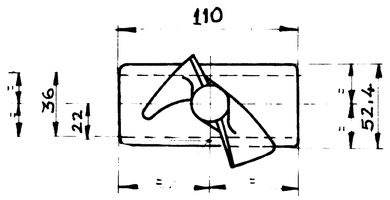

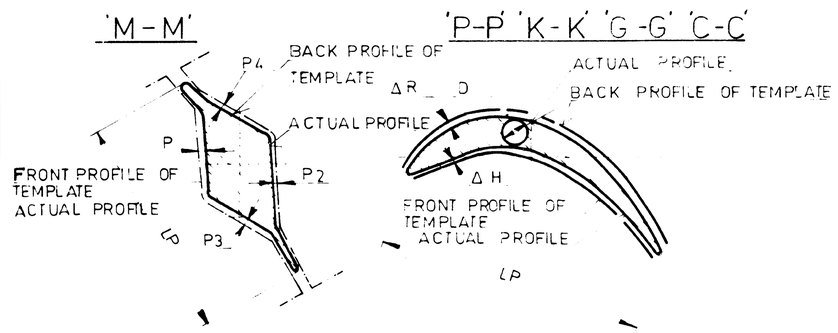

P1 max = 0.85 mm, min = 0 mm
P2 max = 1.05 mm, min = 0 mm
P3 max = 1.00 mm, min = 0 mm
P4 max = 1.20 mm, min = 0 mm
Σ(P1+P2) max = 1.90 mm, min = 0.2 mm
Σ(P3+P4) max = 2.20 mm, min = 0.2 mm

ΔR max = 0.7 mm, min = 0 mm
ΔH max = 0.2 mm, min = 0 mm
Σ(ΔR+ΔH) max = 0.7 mm, min = 0.2 mm

DIFFERENCE ΔR max - 0.4 mm
DIFFERENCE IN THE VARIATION OF THICKNESS WITH IN A BLADE = 0.5 mm
BETWEEN ADJACENT PROFILES AS PER THE TABLE = 0.4 mm

SECTION	C-C	G-G	K-K	M-M	P-P
D	9.8	6.7	4.9	–	3.2
LP	84.3	78.1	74.4	72.6	71.4

MATERIAL X20Cr13
HEAT TREATMENT ≧ 60 Kp/mm²

1.6 Rt = 12 μ TOLERANCES MENTIONED ARE VALID FOR ALL PROFILE SECTIONS

| CARD TYPE-2 | | |

FIRST ANGLE PROJECTION (ALL DIMENSIONS ARE IN mm)

DRG. No. 2-303-22-20008-XX

Rt = 12 μ OR 1,6

L

NOTES :—

1. DIRECTION OF ROTATION IS ANTICLOCK-WISE WHEN SEEN IN THE DIRECTION OF STEAM FLOW.
2. FOR BLADE THICKENING IN SECTION 'M-M' DRG. No. ~~1-11-2311~~ 1-303-18-00002-00
3. FOR PROFILE COORDINATES OF SECTION 'A-A' TO 'R-R' SEE DRG. No. ~~1-11-3336~~ (4 Sheets) 1-303-22-00003-00 4 Shs
4. MAX. ALLOWABLE LONGITUDINAL OFF-SET OF FRONT PROFILE TO BACK PROFILE = 1,0 mm
5. ROOT TOLERANCES AS PER DIN 7526 $^{+2,7}_{+1,3}$ mm
6. ROOT DIMENSIONS CONTAIN NO ALLOWANCE FOR THE SLANTING SURFACE OF FORGING.
7. FORGING SLANT SURFACE IN SECTION 'A-A' 1 : 10
8. ALL DIMENTIONED RADII R = 5 $^{\pm 2,5}$
9. TDC AS PER PS-0041/77

SUPPLY CONDITIONS

PRECISION FORGED, DUBURRED, HEATTREATED AND DRILLED (Centers), INLET EDGES FINISH MACHINED AND OUTLET EDGES ARE TO BE EXTENDED UP TO 3^{+5}_{0} mm OVER FINAL DIMENSIONS.

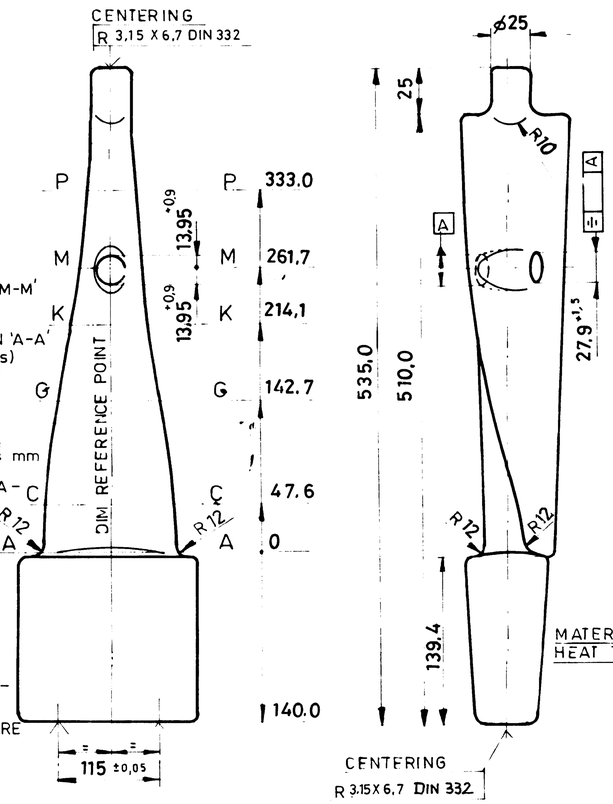

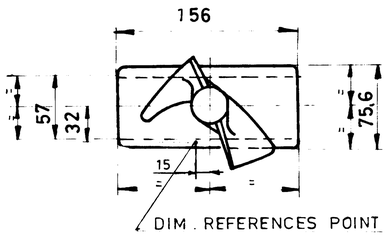

TOLERANCE ON PROFILE SECTIONS

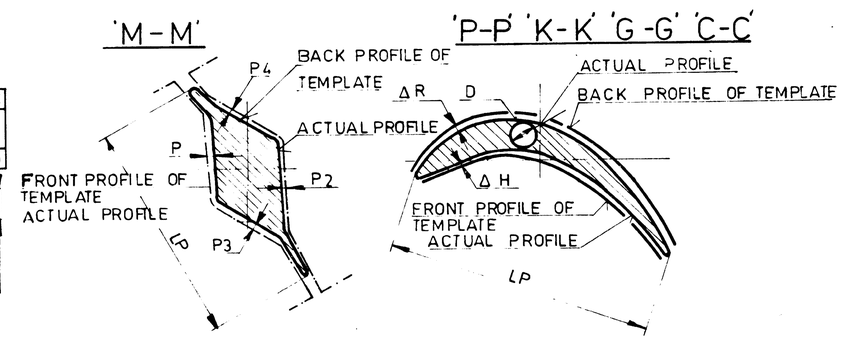

P1 max = 0,85 mm; min = 0 mm
P2 max = 1,15 mm; min = 0 mm
P3 max = 1,50 mm; min = 0 mm
P4 max = 1,80 mm; min = 0 mm
Σ(P1+P2) max = 2.00 mm; min = 0.3 mm
Σ(P3+P4) max = 3.30 mm; min = 0.3 mm

ΔR max = 0,9 mm; min = 0,0 mm
ΔH max = 0,3 mm; min = 0,0 mm
Σ(ΔR+ΔH) max = 0.9 mm; min = 0.3 mm
DIFFERENCE ΔR max = 0.5 mm
DIFFERENCE IN THE VARIATION OF THICKNESS WITH IN A BLADE = 0.6 mm BETWEEN ADJACENT PROFILES AS PER THE TABLE = 0.5 mm

SECTION	C-C	G-G	K-K	M-M	P-P
D	14.0	9,5	7,1	—	4.6
LP	120,8	112.0	106.4	104.1	102,3

MATERIAL X 20 Cr 13-v
HEAT TREATMENT ≧ 60 kp/mm²

Rt = 12 μ TOLERANCES MENTIONED ARE VALID FOR ALL PROFILE SECTIONS

QTY	QTY.	QTY	QTY	No OF	UNIT OF QTY	DESCRIPTION	ITEM No.	STD	DRAWING No.	IT. No.	MATERIAL CODE	A C	COMP GROUP	UNIT WEIGHT (Kg.)	BMI/GRSP	DI	ZONE
VARIANT 02	VARIANT 02	VARIANT 01	VARIANT 00	VARIANT	RM UNIT QTY					VARIANT	MATERIAL SPECN.			QUANTITY			
											X 20 Cr 13			16.4			

CARD TYPE-2 — CARD TYPE-1

ADDITIONAL INFORMATION

STATUS OF DRAWING

DISTRIBUTION OF PRINTS

TYPE OF PRODUCT OR NAME OF CUSTOMER/PROJECT

-00
Var

DEPT.	CODE	SCALE	WEIGHT (KG)	REF. TO ASSY. DRG.	ITEM No.
ITD	415				

	NAME	SIGN.	DATE
DRAWN	TSP		12.5.83
CHECKED	KCHP		12.5.83
APPROVED	K.Ch		12.5.83

TITLE
MOVING BLADE SK/HK 80-3

DIMENSIONS TO BE CONTROLLED WITHIN LIMITS AS SHOWN. MACHINING TOLERANCE ± 25mm UNLESS OTHERWISE SHOWN. NON-MACHINING TOLERANCE 5-1372-0132-00

CARD CODE

DRAWING No. ~~2-11-3256~~ Var. 2-303-22-20008-XX

REV. 00

SHEET No. 1 No. OF SHEETS 1

SIZE A2

REV	DATE	ALTERED / CHECKED	REV	DATE	ALTERED / CHECKED	REV	DATE	ALTERED / CHECKED
ZONE			ZONE			ZONE		

5-1372-0132-00 REF. DRG. No.

INVENTORY No. SIGN. AND DATE

FIRST ANGLE PROJECTION

(ALL DIMENSIONS ARE IN mm)

DRG. No. 2-303-22-20010-XX

Rt = 12 μ OR 1.6

TOLERANCE ON PROFILE SECTIONS

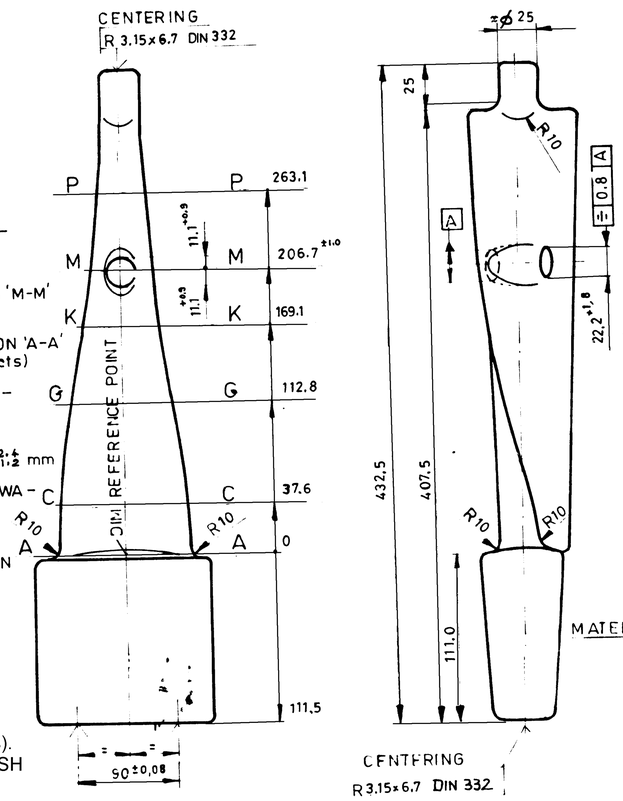

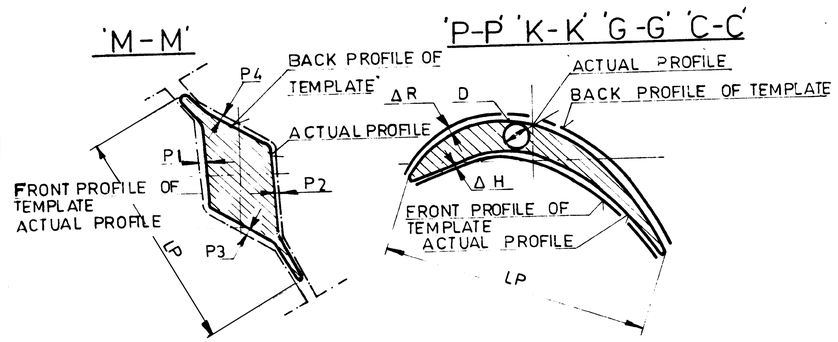

P1 max = 0.85 mm; min = 0 mm
P2 max = 1.05 mm; min = 0 mm
P3 max = 1.00 mm; min = 0 mm
P4 max = 1.20 mm; min = 0 mm
Σ(P1+P2) max = 1.90 mm; min = 0.2 mm
Σ(P3+P4) max = 2.20 mm; min = 0.2 mm

ΔR max = 0.7 mm; min = 0 mm
ΔH max = 0.2 mm; min = 0 mm
Σ(ΔR+ΔH) max = 0.7 mm; min = 0.2 mm
DIFFERENCE ΔR max = 0.4 mm
DIFFERENCE IN THE VARIATION OF THICKNESS WITH IN A BLADE = 0.5 mm
BETWEEN ADJACENT PROFILES AS PER THE TABLE = 0.4 mm

SECTION	C-C	G-G	K-K	M-M	P-P
D	11.1	7.5	5.6	–	3.6
LP	95.5	88.5	84.3	82.3	80.9

MATERIAL X 20 Cr 13-V

1.6 Rt = 12 μ TOLERANCES MENTIONED ARE VALID FOR ALL PROFILE SECTIONS

NOTES :–

1. DIRECTION OF ROTATION IS ANTICLOCK-WISE WHEN SEEN IN THE DIRECTION OF STEAM FLOW.
2. FOR BLADE THICKENING IN SECTION 'M-M' DRG. No. 1-303-18-00002-04
3. FOR PROFILE COORDINATES OF SECTION 'A-A' TO 'R-R' SEE DRG. No. 1-303-22-00007-00 (6 Sheets)
4. MAX. ALLOWABLE LONGITUDINAL OFF-SET OF FRONT PROFILE TO BACK PROFILE = 0.8 mm
5. ROOT TOLERANCES AS PER DIN 7526 $^{+2}_{-1}$ ± ½ mm
6. ROOT DIMENSIONS CONTAIN NO ALLOWANCE FOR THE SLANTING SURFACE OF FORGING.
7. FORGING SLANT SURFACE IN SECTION 'A-A' 1 : 10
8. ALL UNMENTIONED RADII R = 4 ±2.0
9. SUPPLY AS PER PS-0041/77

SUPPLY CONDITIONS:

1. PRECISION FORGED, DEBURRED, HEATTREATED AND DRILLED (Centers).
2. INLET EDGE AND OUTLET EDGE FINISH MACHINED CONDITION

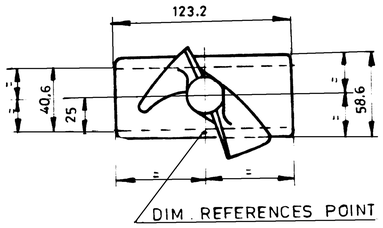

75 QTY	73 QTY	72 QTY	70 QTY	67 QTY	66 QTY	64 No OF	63	62	53 UNIT OF QTY	52	51	22	18	20	22	23	34	35	36	39	50	58	59	64	65	73	79	80	
VARI ANT 01		VARI ANT 02		VARI ANT 01	VARI-ANT 00	VARI-ANT	61		RM UNIT QTY	54	DESCRIPTION		ITEM No.	STD.		DRAWING No.		IT. No.	VARI-ANT	MATERIAL CODE		A C	COMP. GROUP		UNIT WEIGHT (Kg.) QUANTITY		BMI/GRSP	DI	ZONE
																				MATERIAL SPECN.									

CARD TYPE-2 — 21 — 21 — CARD TYPE-1

ADDITIONAL INFORMATION	TYPE OF PRODUCT OR NAME OF CUSTOMER/PROJECT
STATUS OF DRAWING	
DISTRIBUTION OF PRINTS	

DEPT.	CODE	SCALE	WEIGHT (KG)	REF. TO ASSY. DRG.	ITEM No.
ITD	415	X	8.5		

TITLE

MOVING BLADE SK/HK 63-III

	NAME	SIGN.	DATE
DRAWN	TSP		12-12-84
CHECKED	TSP		12-12-84
APPROVED	CNVR		12-12-84

DIMENSIONS TO BE CONTROLLED WITHIN LIMITS AS SHOWN. MACHINING TOLERANCE ±.25mm UNLESS OTHERWISE SHOWN. NON-MACHINING TOLERANCE : .....5-1372-0102-00 Rev.D

CARD CODE

DRAWING No. 2-303-22-20010-XX

REV. 01

SHEET No. 1 — No. OF SHEETS 1

SIZE A2

REV	DATE	ALTERED	CHECKED
01	19.03.07	TS PRABHAKAR	CNV RAMANA

SUPPLY CONDITION REVISED WITH OUTLET EDGE FINISHED.

REF. DRG. No. 5-1372-0102-00 Rev.D

SIGN. AND DATE

INVENTORY No.

R

3-303-18-20001

SH1 OF 1

DIRECTION OF ROTATION CLOCKWISE WHEN SEEN IN THE DIRECTION OF STEAM FLOW

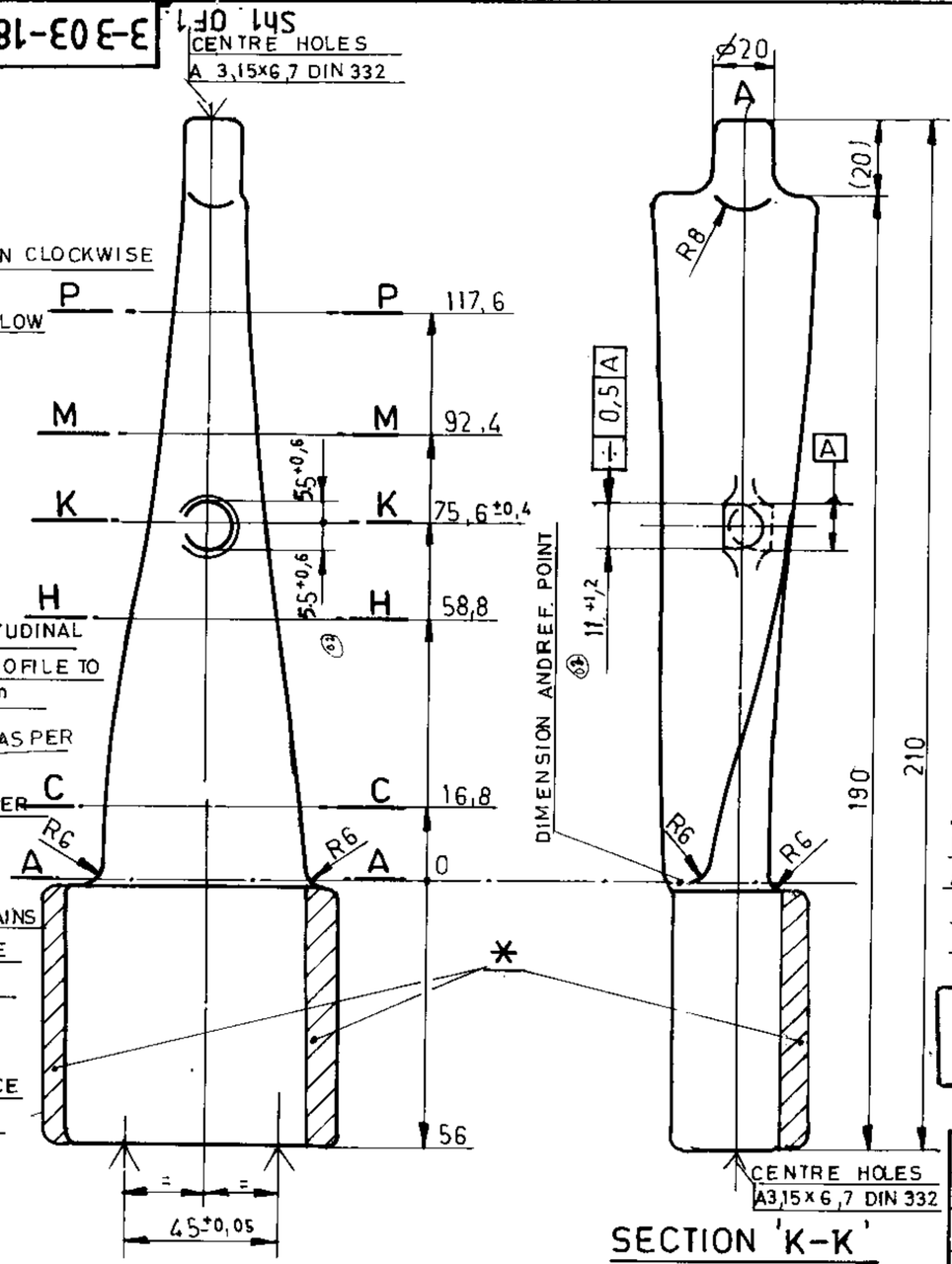

NOTES:-

1. MAX. ALLOWABLE LONGITUDINAL OFF SET OF FRONT PROFILE TO BACK PROFILE = 0,7mm
2. PROFILE COORDINATES AS PER DRG-NO. 0-303-22-00002-00
3. ROOT TOLERENCES AS PER DIN 7526 $^{+1,3}_{-0,7}$ mm
4. ROOT DIMENSIONS CONTAINS NO ALLOWANCE FOR THE SLANTING SURFACE OF FORGING.
5. FORGING SLANT SURFACE IN SECTION 'A-A' N 1:10
6. ALL UNMENTIONED RADII R 3±1,5
7. * EXCESS MATERIAL AS PER FORGING DIE.

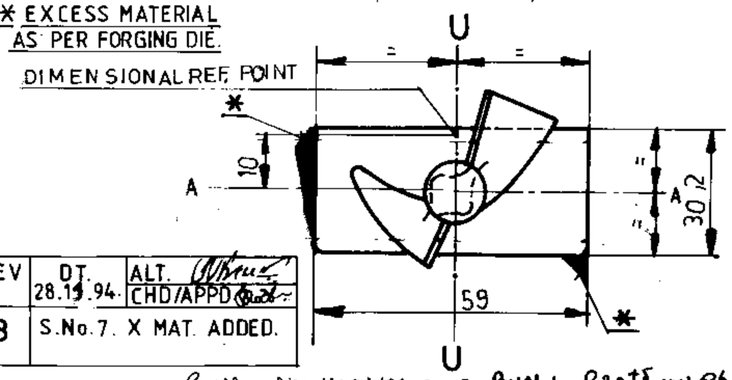

SECTION 'K-K'

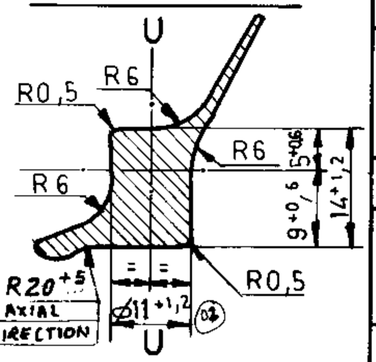

RADIUS R6 IN ALLROUND TANGENTIAL TO THE PROFILE AND PROFILE THINNING SECTION

TOLERANCE ON PROFILE SECTIONS

'K-K'

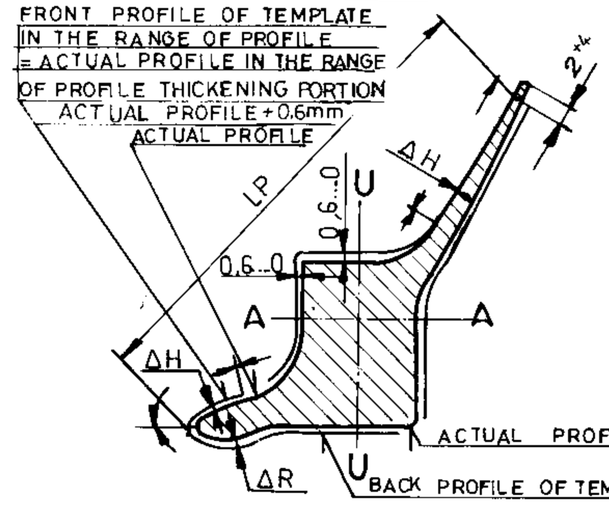

'C-C' ; 'H-H'; 'M-M'; 'P-P'

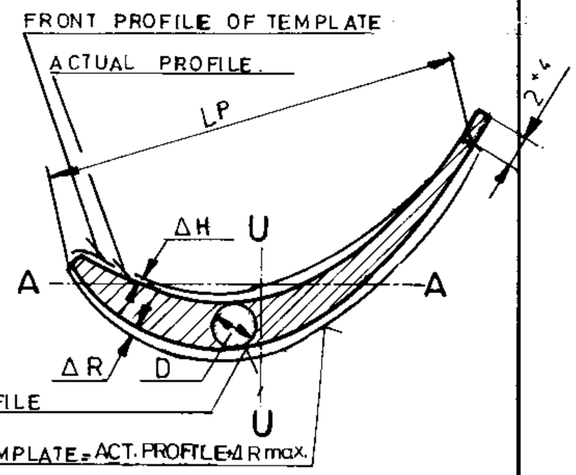

ΔR AND ΔH IS TO BE MEASURED PERPENDICULAR TO THE TANGENT AT THE MEAN LINE PROFILE THICKNESS

ΔR max = 0.6 mm, min. = 0 mm

ΔH max = 0.2 mm, min = 0 mm

Σ(ΔR+ΔH)max = 0.6 mm, min = 0.2 mm

DIFFERENCE ΔR max = 0,4 mm

DIFFERENCE IN THE VARIATION OF THICKNESS WITH IN A BLADE = 0,4 mm

BETWEEN ADJACENT PROFILE = 0.3 mm

SECTION	C-C	H-H	K-K	M-M	P-P
D	5,4	3,4	/	2,4	1,9
LP	42,3	39,7	39,5	39,5	39,4

DELIVERY CONDITIONS:
PRECISION FORGED, TRIMMED, HEAT-TREATED AND WITH CENTRE HOLES, INLET EDGE FINISHED; OUTLET EDGE WITH 2^{+4}_{0} mm ALLOWANCE

GENERAL DIMENSIONAL LIMITS, FITS & TOLERANCES AS PER P.S., HY-0230261

HEAT TREATMENT ≧60 Kp/mm²	
MATERIAL = V-X20 Cr 13 V	
SPECIFICATION - HY 19360	
WEIGHT - 0.8 Kg	

	-00
	Var.

DEPT	CODE	SCALE	WEIGHT (KG)	REF. TO ASSY. DRG.	ITEM No.
ITD	415	/	0.8		

TITLE

L.P.

MOVING BLADE SK/HK 29-3(R)

	NAME	SIGN	DATE
DRAWN	Vijaya		20-4-83
CHECKED	T.S.P.		85-7-5
APPROVED	C.N.V.R.		85-7-5

DIMENSIONS TO BE CONTROLLED WITHIN LIMITS AS SHOWN MACHINING TOLERANCE ± 25mm UNLESS OTHERWISE SHOWN NON MACHINING TOLERANCE ± ....

CARD CODE

DRAWING No. 3-303-18-20001 REV 03

SHEET No. 01 No. OF SHEETS 01

REV	DT.	ALT. / CHD/APPD
03	28.11.94	S.No.7. X MAT. ADDED.

Rev02 :- Dim 11 was 10 Ess 5 mm 1-3-98

Rev01 :- R20+5 was R6 23.2.88

5-1372-0023-00 REV.0 REF. DRG. No.

SIGN AND DATE

INVERTORY No.