DRAWING NO. 0-00-111-27332/00

ALL DIMENSIONS ARE IN MILLIMETRES

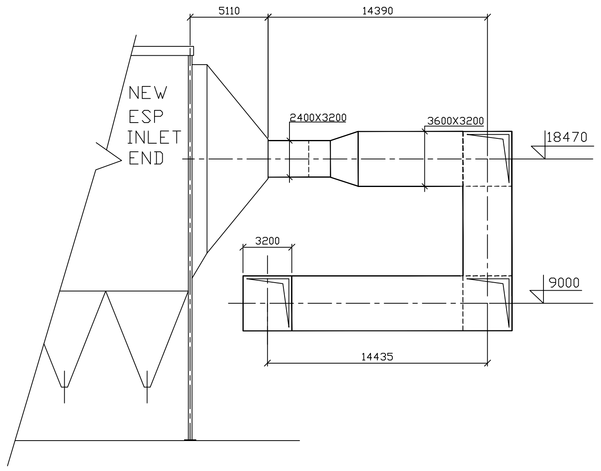

VIEW-B (B-5)

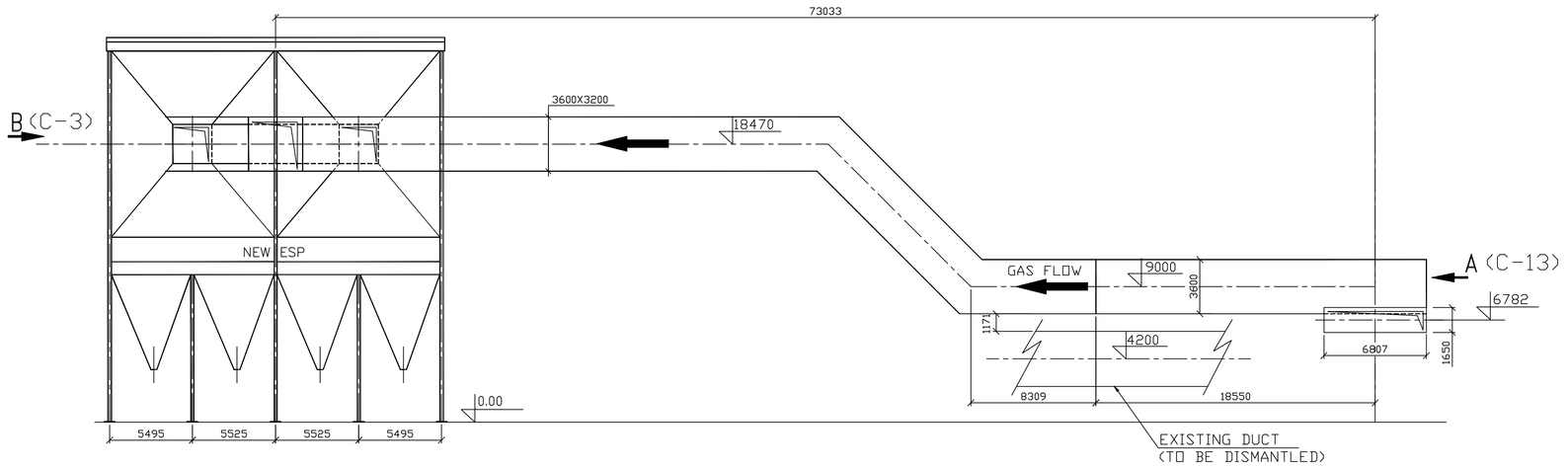

VIEW-X (G-1)

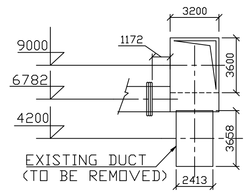

VIEW-A (B-11)

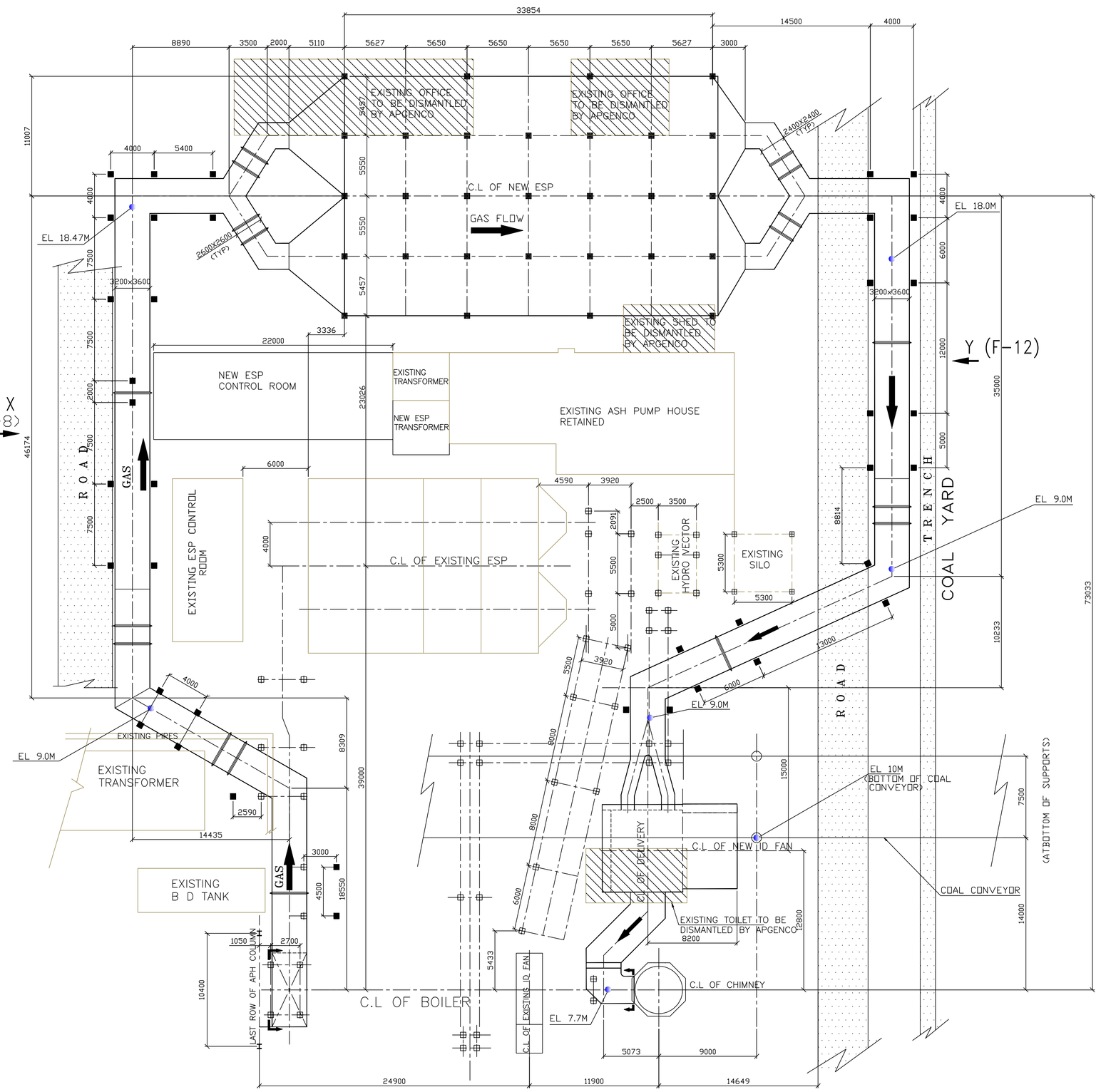

LAYOUT PLAN FOR NEW ESP, NEW ID FAN WITH DUCTS & NEW ESP CONTROL ROOM

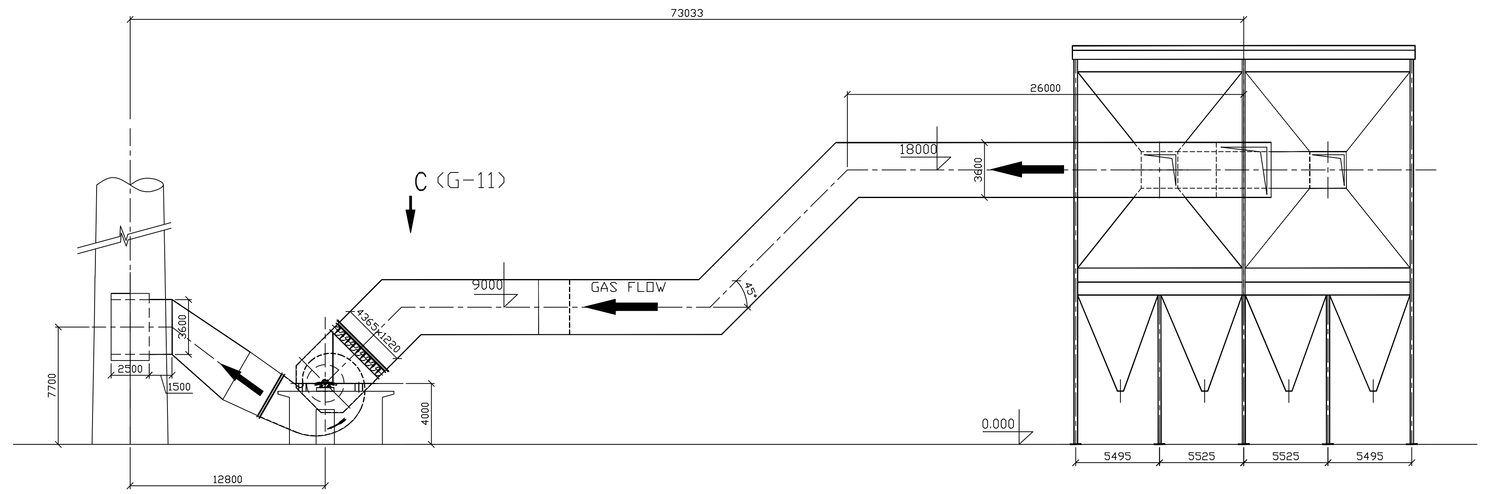

VIEW-Y (F-7)

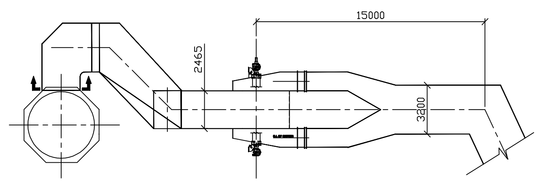

VIEW-C (D-10)

NOTES

01) [ ] INDICATES SCOPE OF SUPPLY FROM BHEL RANIPET.
■ INDICATES NEW ESP/DUCT COLUMNS.

02) NEW ESP SIZE IS FAA-6X37.5M-2X108150 (400 MM PITCH).

03) THIS LAYOUT DRAWING HAS REFERENCE: PO: GM 4583 / CEG-I/421 /RTS-B/R&M WORKS ESP / 317/08 DATED 13.06.08.

04) THIS OPTION IS APPROVED BY APGENCO VIDE LETTER DATE 06.10.08.(REFER DRG NO 1-00-111-28457)

05) THE LAYOUT IS FINALIZED AT SITE AFTER DISCUSSION WITH APGENCO SO THAT THE PROPOSED RETROFIT ESP, DUCT AND NEW ID FAN ARE ERECTED WITH BOILER IN SERVICE AND HOOK UP CAN BE TAKEN UP WITH A SHORT SHUTDOWN.

06) ESP OUTLET DUCT WILL BE ROUTED HORIZONTALLY OVER THE ROAD AT AROUND 18.0M ELEVATION AND IT WILL CROSS THE ROAD (NEAR ID FAN) AT AROUND 9.0 M ELEVATION. THE COAL CONVEYOR ELEVATION IS 5M - 10M OVER THE ROAD AND HENCE THE DUCT WILL NOT INTERFERE ROAD APPROACH LEVEL BELOW COAL CONVEYOR.

07) THE NEW ESP, NEW ID FAN AND MAJOR.PORTION OF DUCTS WILL BE ERECTED WHEN BOILER IS IN SERVICE. SHUT DOWN OF 30-40 DAYS AS INDICATED IN CONTRACT SPECIFICATION MAY BE REQUIRED FOR HOOK UP.

08) DISMANTLING/MODIFICATION/REROUTING OF ANY EXISTING STRUCTURE/FACILITIES/PIPELINES/ CABLE TRENCHES ETC. WHICH ARE INTERFERING IN NEW ESP AND DUCTING SYSTEM AREA ARE IN THE SCOPE OF APGENCO. APGENCO SHALL ARRANGE FOR REMOVAL/REROUTING OF FOLLOWING TO START THE CIVIL WORK AND FURTHER TO INSTALL NEW ESP, DUCTS & ID FAN.

- ANY TREES THAT INTERFERE WITH THE LAYOUT.
- THE EXISTING OFFICE BUILDING AT NEW ESP COLUMN SIDE.
- THE EXISTING TOILET BUILDING AT NEW ID FAN LOCATION.
- REROUTING OF CABLE TRENCH IN THE NEW ID FAN AREA.
- ANY WATER LINE, FIRE FIGHTING, OVERHEAD/UNDERGROUND CABLE TRENCHES.

09) EXISTING ESP BOTTOM OF BASE PLATE LEVEL WILL BE CONSIDERED AS 00 LEVEL FOR NEW ESP RETROFIT.

10) BHEL/RANIPET SCOPE: SUPPLY OF ESP, NEW ID FAN AND DUCTING FROM TAPPING POINT AT THE OUTLET OF EXPANSION JOINT AT THE OUTLET OF APH TO ID FAN AND FROM ID FAN TO CHIMNEY AS SHOWN IN THIS LAYOUT DRAWING.

11) THE EXISTING NEAR BY STRUCTURES WILL BE MADE USE OF TO THE EXTENT NECESSARY FOR APPROACH PURPOSE.

12) DISMANTLING OF EXISTING ESP, DUCTING SYSTEM, ASH HANDLING SYSTEM, ID FAN AND OTHER ALLIED SYSTEMS LIKE ELECTRICAL ITEMS, CABLE, PANELS,ETC., WILL BE DONE BY M/S. APGENCO-AS PER THE CONTRACT SPECIFICATION.

13) EXCAVATION AND REMOVAL OF FOUNDATION OF EXISTING ESP, DUCT, FAN, FAN MOTOR AND FAN HANDLING COLUMN WILL BE DONE BY M/S. APGENCO, IF REQUIRED.

14) NEW VFD AND ESP CONTROL ROOM, ESP SERVICE TRANSFORMER WILL BE LOCATED ADJUSCENT TO THE ASH HANDLING PLANT CONTROL ROOM.

15) THE FOLLOWING RELATED DRAWINGS MAY BE REFERRED.
FOR GENERAL ARRANGEMENT OF ESP: DRG NO : 0-00-111-27323
FOR ESP FOUNDATION LOADING: DRG NO : 1-00-112-28474
FOR DUCT FOUNDATION LOADING: DRG NO : 1-00-112-28474

REV	DATE	ALTERED:
		CHECKED:

WORK ORDER NO.R440

CUSTOMER: APGENCO

PROJECT: RAMAGUNDAM TPS 'B' STATION (1X62.5MW)

BHARAT HEAVY ELECTRICALS LTD.
UNIT: BOILER AUXILIARIES PLANT.
RANIPET - 632 406.

	NAME	SGN	DATE	NO.OF VAR.
DRN	RAJIV RANJAN		22.11.08	
CHD	G.GUNASEKAR		22.11.08	--
APPD	D.VEDUVASAM		22.11.08	

DEPT.	GRADE OF UNTOL.DIM	SCALE	WEIGHT (KG).	REF. TO ASSY/OLD DRG.	No. OF ITEMS
AGCS					--
CODE 862	E / M / F	--	--	--	

TITLE: LAYOUT FOR RETROFIT OF NEW ESP & ID FAN WITH DUCT

CARD CODE:

DRAWING NO. 0-00-111-27332

REV 00

Size A0

CAUTION: The information on this drawing is the property of BHARAT HEAVY ELECTRICALS LTD. It may not be used or reproduced in any way detrimental to the interest of the owner.