FIRST ANGLE PROJECTION

(ALL DIMENSIONS ARE IN mm)

DRG. NO. 0-103-07-62012 SH. 01 OF 01

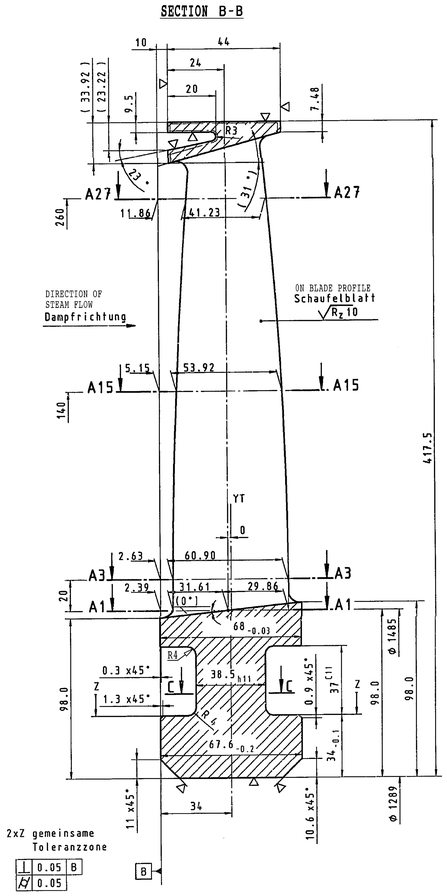

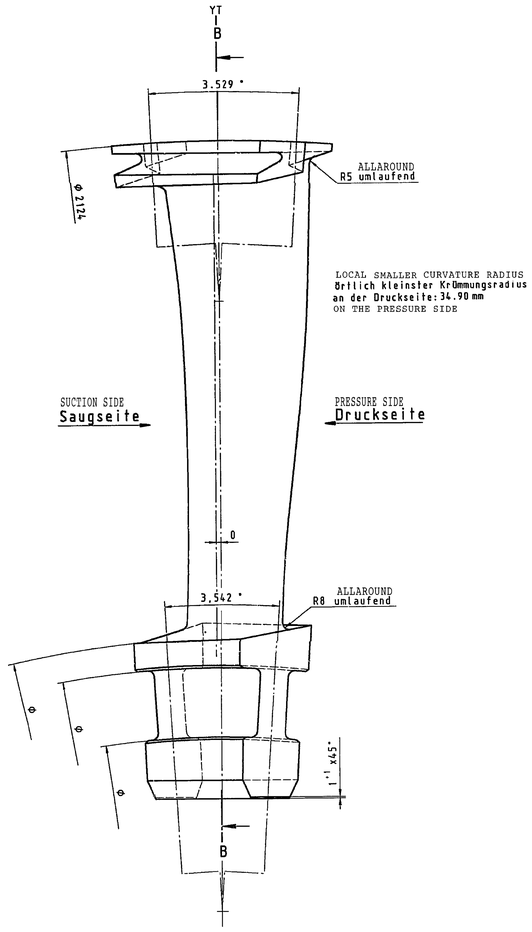

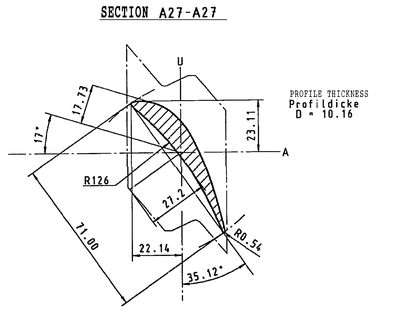

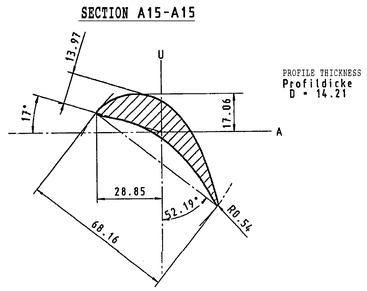

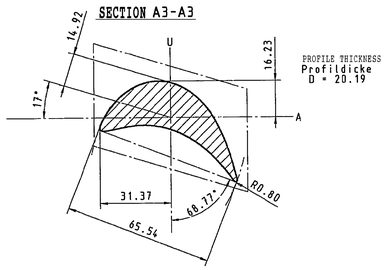

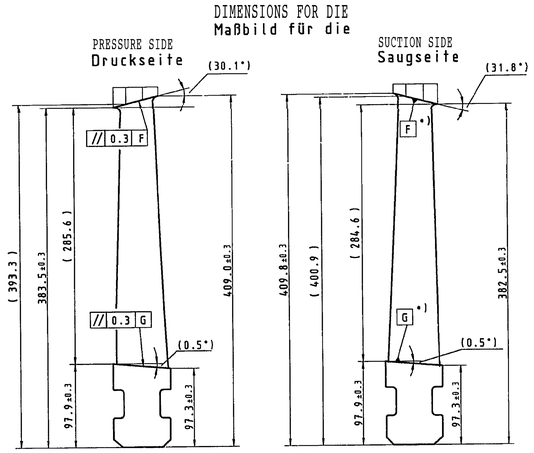

Rohteil in Zentrierlage
BLANK IN CENTER POSITION

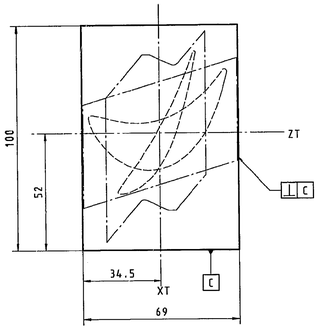

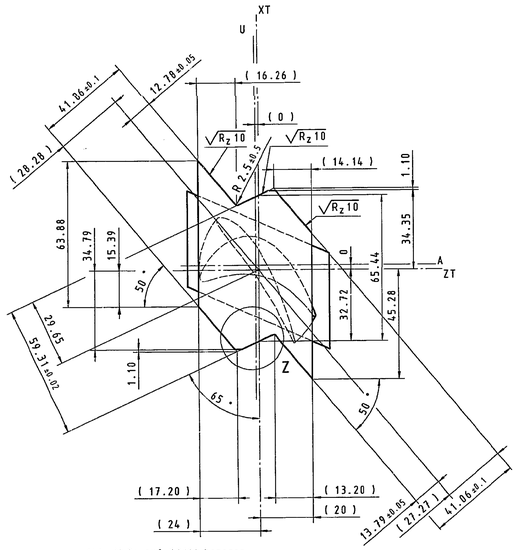

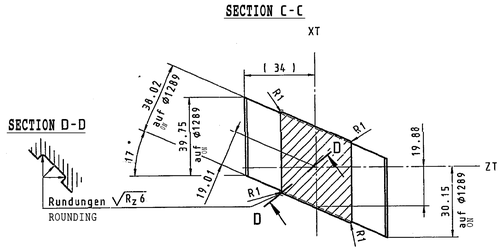

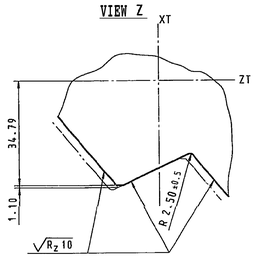

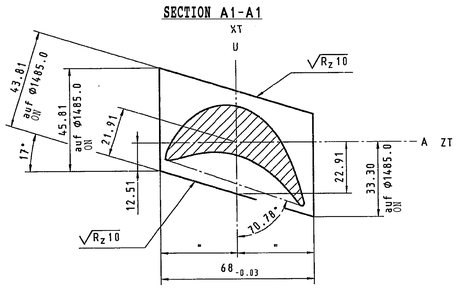

TOLERANCES
Toleranzen

0.25	Profilform	PROFILE FORM
±0.25	Profildicke	PROFILE THICKNESS
±0.25	Profillänge	PROFILE LENGTH
±0.30	Profilwinkel	PROFILE ANGLE
±0.02	Teilung	PITCH

TAPER VALUES FOR JIG LENGTH = 1000mm
Konuswerte f. Vorrichtungsl. 1000 mm

			ROOT Fuß	SHROUD Deckpl.
BLADE POSITION	Schaufellage	Ex	9.031	—
TABLE INCLINATION	Tischneigung	Ey	59.086	—
MEASURED HEIGHT	Meßhöhe	Eh	37.959	—

Strak-Nr: 19114
Profilzeichnung: 7651-24606/010 bis /011
Nutzeichnung: 6661242
Schaufelstückzahl/Reihe: 102
(einschl. Schlußschaufel)

NOTES:

1. PROFILE CO-ORD. AS PER DRG. NO. 0-103-07-62009-00 (2 SH)
2. NUMBER OF PIECES PER ROW INCLUDING LOCK BLADE = 102

THE INFORMATION ON THIS DOCUMENT IS THE PROPERTY OF BHARAT HEAVY ELECTRICALS LIMITED. IT MUST NOT BE USED DIRECTLY OR INDIRECTLY IN ANY WAY DETRIMENTAL TO THE INTEREST OF THE COMPANY

GENERAL DIMENSIONAL LIMITS,FITS & TOLERANCES AS PER HY0230261

SIGN. AND DATE | REF. DRG. NO 7651-24606 REV:A | COMPUTER FILE NAME 0103071262-500-500.TIF

INVENTORY NO

REV.	DATE	ALTERED CHD/APPD

TYPE OF PRODUCT OR NAME OF CUSTOMER/PROJECT

BHARAT HEAVY ELECTRICALS LIMITED
HYDERABAD

	NAME	SIGN.	DATE	NO. OF VAR.
DRN.	SCS/TSP		23.5.2000	
CHD.	T.S.PRABHAKAR		23.5.2000	NA
APPD.	C.H.V.RAMANA		23.5.2000	

DEPT. CODE 815	UNTOL. DIMS. CH. ±0.1/±1	SCALE NTS	WEIGHT (KG) NA	REF. TO ASSY. DRG. NA	ITEM NO. NA / NO. OF ITEMS NA
TITLE LP MOVING BLADE-1L (F116-64/72-320-70.78°) (NEW 5.0Sqm)			CAPC CODE N.A.	DRAWING NO. 0-103-07-62012	REV. 00
				SHT. No 01	NO. OF SHT. 01

-00
VAR

(ALL DIMENSIONS ARE IN mm)

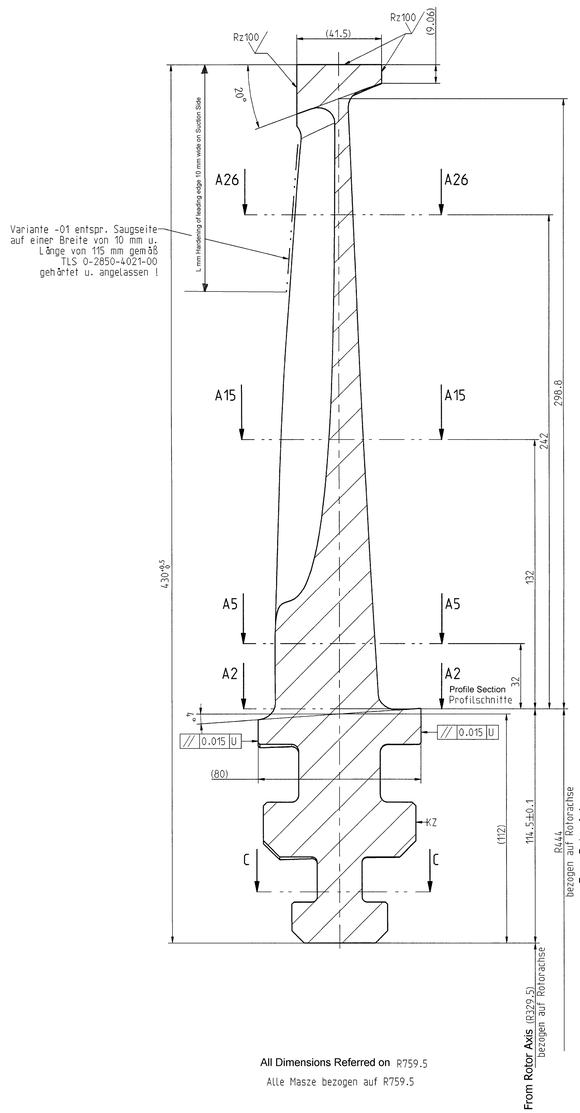

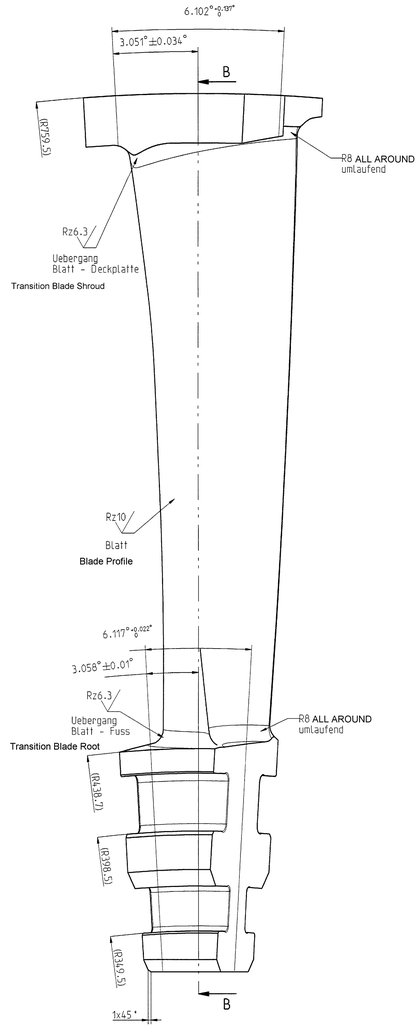

All Dimensions Referred on R759.5

Alle Masze bezogen auf R759.5

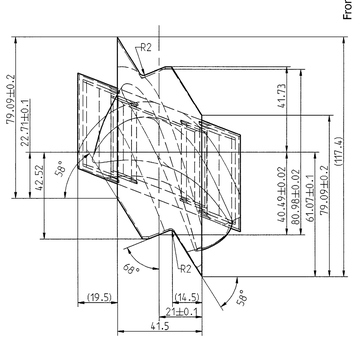

SECTION C-C

Alle Masze bezogen auf R329.5

All Dimensions Referred on R329.5

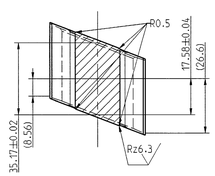

SECTION A2-A2

Alle Masze bezogen auf R444

All Dimensions Referred on R444

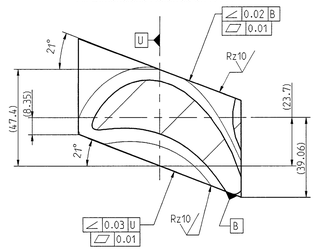

PRESSURE SIDE

Druckseite

M 1:2

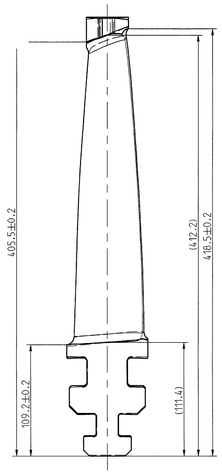

SUCTION SIDE

Saugseite

M 1:2

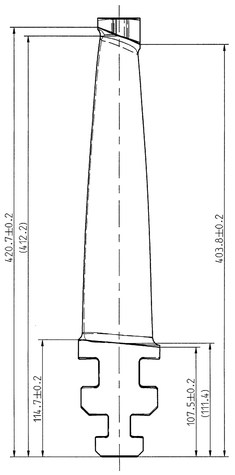

L

LINKS

LEFT

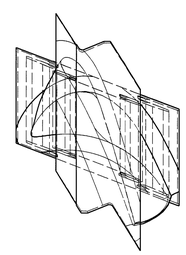

R

RECHTS

RIGHT

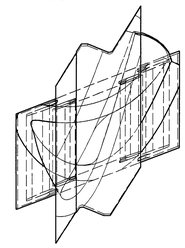

PROFILE TOLERANCE FOR THE

Profiltoleranzen

für die Prüfschnitte A5, A15, A26

CHECKING SECTIONS A5, A15, A26

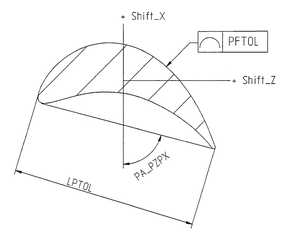

PFTOL	0.25
Shift_X	+0.50 -0.25
Shift_Z	+0.5 -0.25
PA_PZPX	±0.25
LPTOL	+0.25 -0.50

POS. NO. 2

Endschaufeln **LOCK BLADE**

fehlende Maße Endschaufel siehe Laufschaufel

Sachnummer	Drehrichtung	Kantenhaertung
4-4920-2212-00	LINKS	ohne
4-4920-2212-01	LINKS	mit
4-4920-2202-00	RECHTS	ohne
4-4920-2202-01	RECHTS	mit

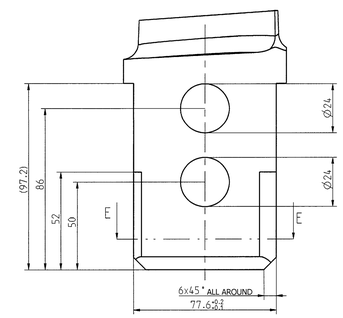

SECTION E-E

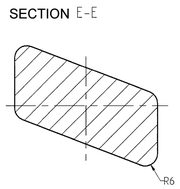

NOTES:

1. Profile co-ordinates as per drawing No:0-303-21-00007
2. Root and Groove As per drawing No:3-303-21-00061
3. Final Machining As per Blading Plan
4. Profile Checking Sections: A5, A15, A26.
5. Total No. of Blades including Lock Blade: 59 Pieces.
6. MIssing Dimensions of Pos No. 2 to be seen in Pos No.1

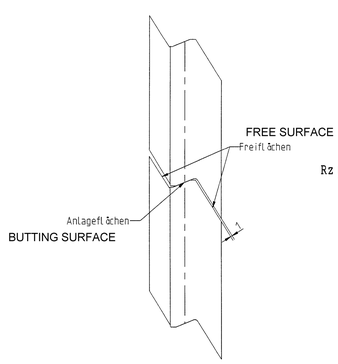

Rz 16 = 0.8 (Rz 6.3 = 0.4 Rz 10 = 0.8 Rz 100 = 12.5)

L	Pos No	Description	VAR
0	2	Lock Blade -Right	03
0	1	Normal Blade -Right	02
0	2	Lock Blade -Left	01
0	1	Normal Blade- Left	00

TYPE OF PRODUCT OR NAME OF CUSTOMER/PROJECT

BHARAT HEAVY ELECTRICALS LIMITED HYDERABAD

	NAME	SIGN.	DATE	NO.OF VAR.
DRN.	Harish		02.06.05	NA
CHD.	T.S.Prabhakar		02.06.05	
APPD.	C.N.V.Ramana		02.06.05	

DEPT. ITD | UNTOL. DIMS. CR. ±1/M/f | SCALE NTS | WEIGHT (KG) 3.8 | REF. TO ASSY. DRG. NA | ITEM NO. NA | NO.OF ITEMS NA

DEPT. CODE 415

TITLE **L P MOVING BLADE-2 (SL 2.2 SQM)**

CARD CODE N.A. | DRAWING NO. 0-303-21-00006 | REV. 00

SHT. No 01 | NO. OF SHT. 01

REV.	DATE	ALTERED	CHD/APPD	ZONE

THE INFORMATION ON THIS DOCUMENT IS THE PROPERTY OF BHARAT HEAVY ELECTRICALS LIMITE NOT BE USED DIRECTLY OR INDIRECTLY IN ANY WAY DETRIMENTAL TO THE INTEREST OF THE CO

GENERAL DIMENSIONAL LIMITS,FITS & TOLERANCES AS PER HY0230261

COMPUTER FILE NAME

SIZE DWG NO. 0-2-128-2202-00 REV-4.

SIGN AND DATE

INVENTOR NO

[...] Abnahmeschnitte für Schaufelrohlinge

Oberflächengüte für Schaufelblatt: Rz20
für Eintrittskante, Austrittskante und Blattwurzel : Rz6

Dampfrichtung

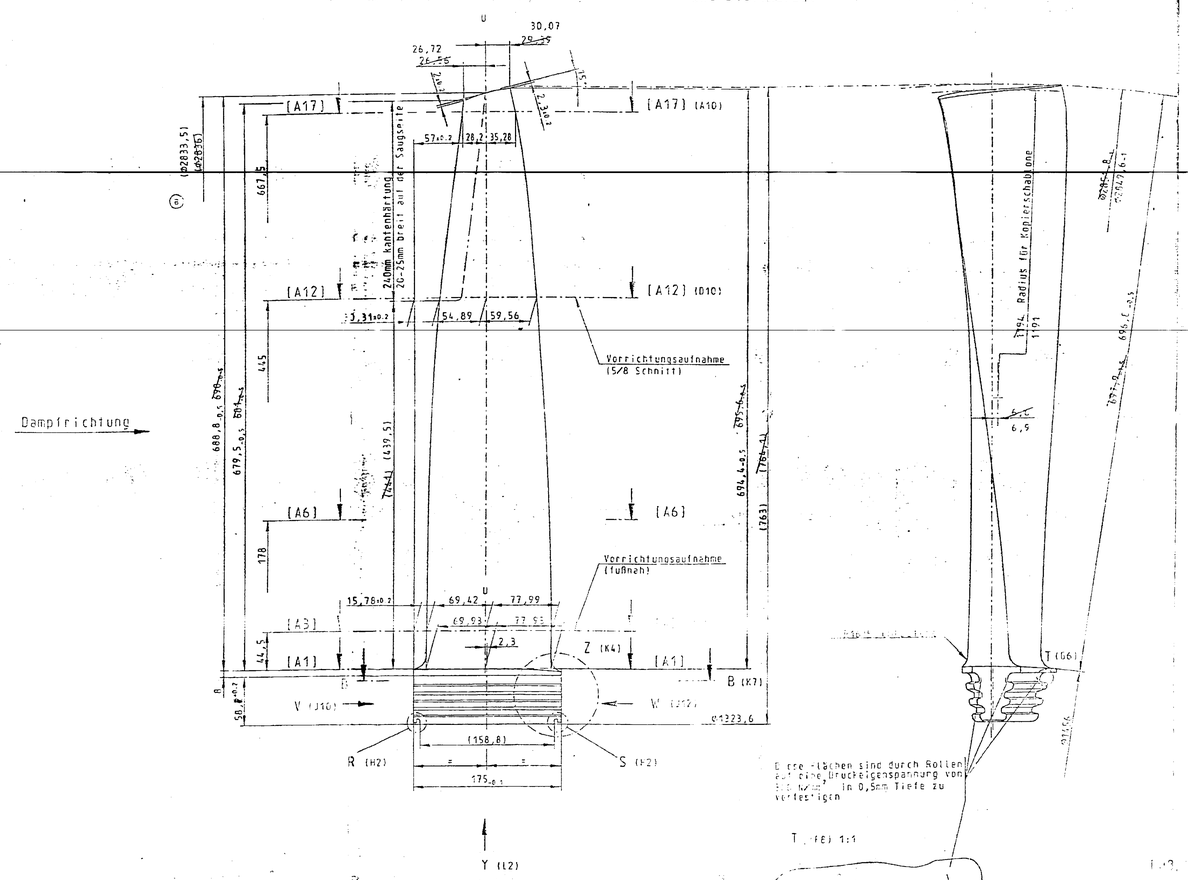

A17 – A17 (B5)

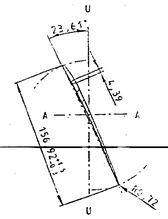

A12 – A12 (C5)

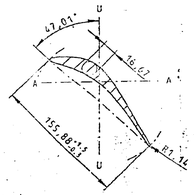

A3 – A3 (F5)

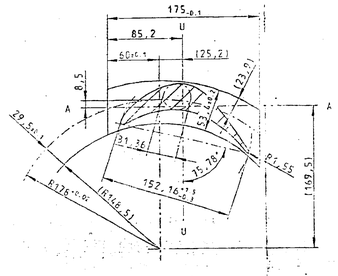

Toleranzen für das Schaufelblatt

Schema für Winkelangabe

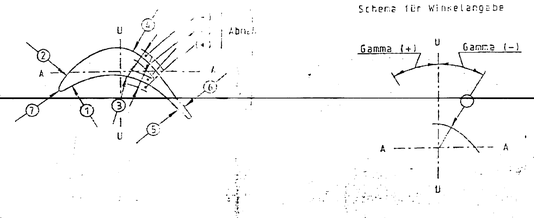

+55- SOLLTE MOMENTPUNKT POINT	KOORDINATEN COORDINATES U	WINKEL ANGLE GAMMA	MASS OBERES NOMINAL UPPER	MASS UNTERES ALLOWANCE LOWER
FUSSKNAP. SCHN TT A3 – A3				
1	-5.17 -93.63	76.33	1.76	-0.30
2	-5.15 -92.77	76.03	1.70	-0.30
3	-5.13 -91.92	-75.75	1.60	-0.30
4	-5.10 -91.07	-75.47	1.50	-0.30
5	-5.07 -90.22	-75.19	1.35	-0.30
6	-4.94 -88.96	-54.63	1.25	-0.20
7	-4.73 -86.69	-54.63	1.20	-0.20
8	-4.37 -79.45	-48.41	1.20	-0.30
5/4 SCHNITT A12 – A12				
1	-46.16	27.25	-51.64	1.40	-0.50
2	-47.14	27.03	-52.41	1.40	-0.50
3	-48.14	26.36	-53.97	1.40	-0.50
4	-53.65	25.05	-55.86	1.40	-0.50
5	-55.54	25.52	-57.57	1.40	-0.50
6	-57.39	28.58	-80.33	1.40	-0.50
7	-58.92	28.39	-89.26	1.40	-0.50
SPITZE SCHNITT A17 – A17					
1	-667.5				
2	-22.03	45.42	-63.40	1.60	-0.70
3	-18.03	47.31	-60.27	1.60	-0.60
4	6.[illegible]	-41.71	-60.85	1.60	-0.70
5	[illegible]	-53.54	-68.78	1.60	-0.60
6	28.[illegible]	-70.43	-67.56	1.60	-0.70
7	29.[illegible]	-70.31	-68.54	1.60	-0.65
8	-27.[illegible]	59.32	32.50	1.60	-0.70

Toleranzen nach dem Härten
Schnitt A17 – A17 Tolerances after hardening

1	-667.5			
2	-22.03	45.42	-63.40	3.7	-0.1
3	-18.03	47.31	-60.27	3.4	-0.1
4	6.[illegible]	-41.71	-60.85	3.4	-0.1
5	[illegible]	-53.54	-68.78	3.4	[illegible]
6	[illegible]	[illegible]	-67.56	3.4	[illegible]
7	[illegible]	[illegible]	-68.54	3.4	[illegible]
8	-27.[illegible]	59.32	32.50	3.4	[illegible]

Zulässige Eigenfrequenzen der Schaufeleigenfrequenzen
Allowed Range of Blade Frequencies

Schwingungsform	Frequenzmessung Frequency measurement in Hz	Frequenzabstimmung im Betrieb Frequency tuning in Hz

Profil: F118-150/157-700
Laufschaufel BZ: 7651-24553 Ausf.: 1
Laufschaufelprofil: 7651-24553/010
Nut - und Fußprofil: 4134-34170 (Form 4)

Ausführung 1: ohne Kantenbrechung
Ausführung 2: mit Kantenbrechung

Linke Schaufel in Dampfrichtung gesehen

Fertigungs-Informations-Blatt

R (G3) wie gezeichnet

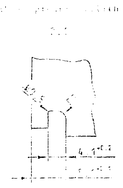

X (A4)

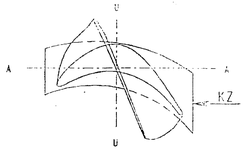

Z (F5) 1:1

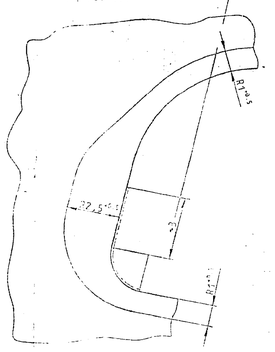

B – B (F6)

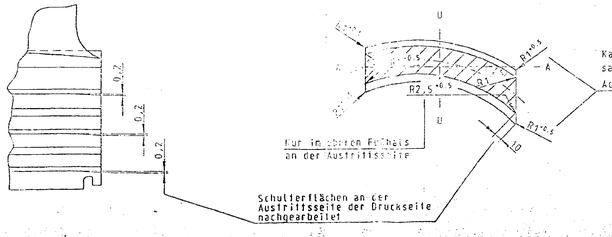

Y (R4)

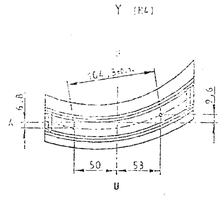

Zentrierbohrung nach Zchng.: 7651-24553

Kennzeichnung nach KUN 107.01
an mit KZ gezeichneter Stelle im Planquadrat J5
Identification acc. to KUN 107.01
at the place indicated with KZ at map square J5

V (G3) 1:1

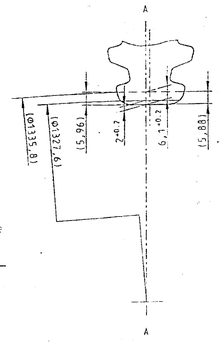

W (G5) 1:1

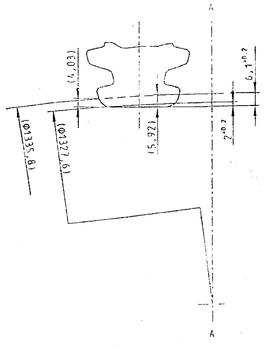

02.93	Massing		Toleranzen nach dem Härten hinzugefügt.
10.93	Kleinter		Schaufelquerschnitt verändert.
	Name	Datum	FERSTER, SCHEMERINGHOFER, STEINER, ZT KWU

X37557

02.93	Massing	MASSSTAB 1:2,5	SPECIFICATION KUN 35.01
08.93	Massing	ZEICHNUNGSNR. 0-303-22-00006	BLU 00.
11.09.93	Klaus	Laufschaufel N30-1x5/XD ST3,L	TSchab 08/09/005

Siemens AG
Energieerzeugung KWU

00	06	7651-24608		b.	00

Erst. 14.09.93 Gb

SEG-GEW. TOTAL (N-M) 13,1 t

0-303-22-00006

SIGRAPH-CAD

THIRD ANGLE PROJECTION

(ALL DIMENSIONS ARE IN mm)

0-351-29-61006

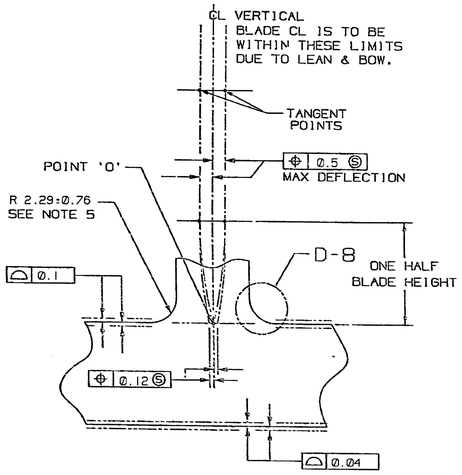

SECTION F-7 (G-3)

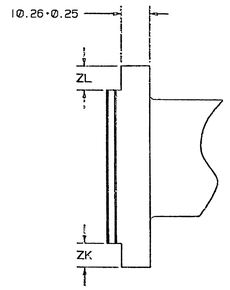

VIEW F-5 (G-5)

F-5 →

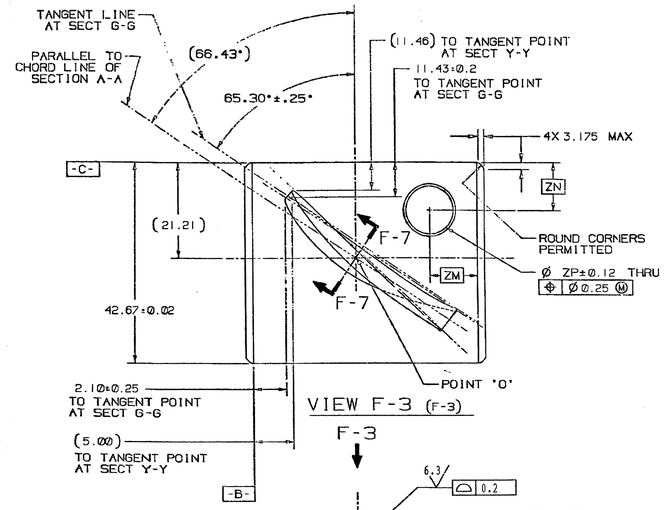

VIEW F-3 (F-3)

F-3 ↓

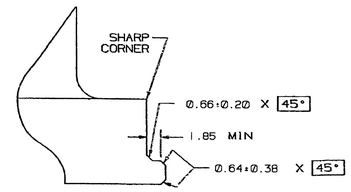

DETAIL E-5 (C-3)
(APPLIES TO BOTH SIDES OF BASE)

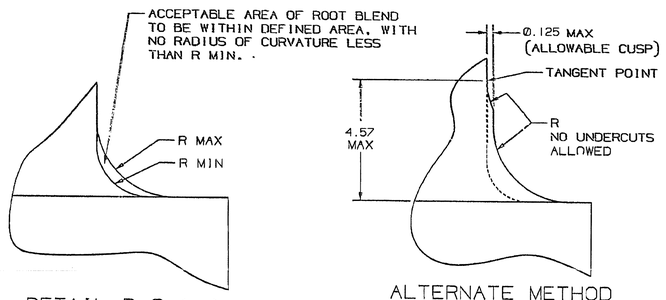

DETAIL D-8 (G-7)

ALTERNATE METHOD OF MANUFACTURE
(REFER TO DETAIL D-8)

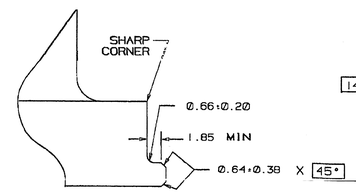

ALTERNATE METHOD OF MANUFACTURE
(REFER TO DETAIL E-5)

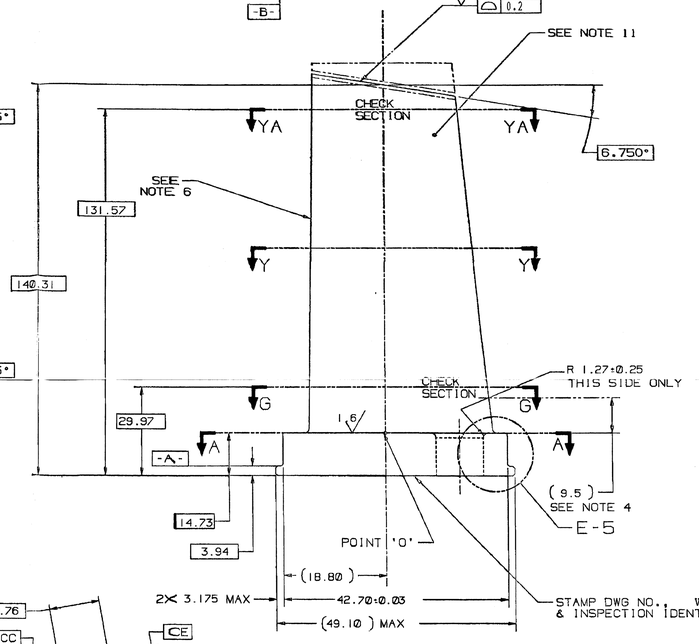

NOTES:

1. FOR APPLICABLE DRAWING NOTES SEE ITEM 2.

VAR	ZK± 0.12	ZL± 0.12	ZM	ZN	ZP	MATERIAL	COATING	REF
01	OMIT	OMIT	OMIT	OMIT	OMIT	HY10988	OMIT	P1
02	OMIT	6.73	OMIT	OMIT	OMIT	HY10988	OMIT	P2
03	6.73	OMIT	OMIT	OMIT	OMIT	HY10988	OMIT	P3
04	OMIT	OMIT	OMIT	OMIT	OMIT	HY10988	ITEM 6	P4
05	OMIT	6.73	OMIT	OMIT	OMIT	HY10988	ITEM 6	P5
06	6.73	OMIT	OMIT	OMIT	OMIT	HY10988	ITEM 6	P6
07	OMIT	OMIT	OMIT	OMIT	OMIT	HY10988	ITEM 7	P7
08	OMIT	6.73	OMIT	OMIT	OMIT	HY10988	ITEM 7	P8
09	6.73	OMIT	OMIT	OMIT	OMIT	HY10988	ITEM 7	P9
10	OMIT	OMIT	9.14	9.14	14.27	HY10988	OMIT	P10
11	OMIT	OMIT	9.14	9.14	14.27	HY10988	ITEM 6	P11
12	OMIT	OMIT	9.14	9.14	14.27	HY10988	ITEM 7	P12
25	MATL HY10996 OWSA VAR 02							-
26	MATL HY10996 OWSA VAR 03							-
27	MATL HY10996 OWSA VAR 10							-

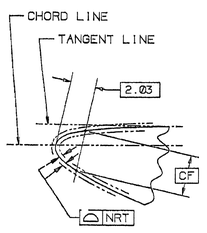

DETAIL B-8 (C-6)
(LEADING EDGE)

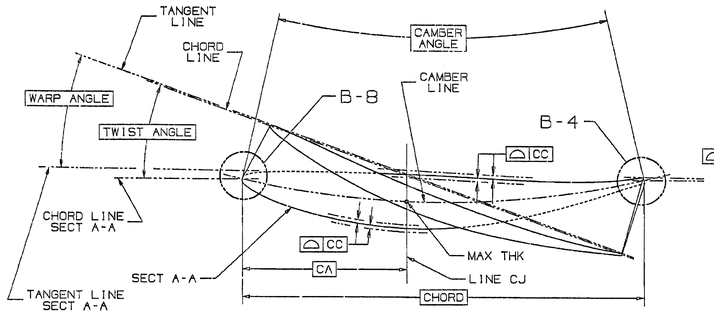

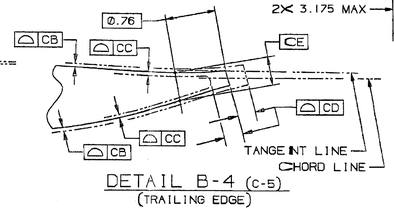

DETAIL B-4 (C-5)
(TRAILING EDGE)

SECTION	SECTION HEIGHT	CHORD	PERCENT THICKNESS	CAMBER ANGLE	TWIST ANGLE	WARP ANGLE	THICKNESS AT 'CA'	CA	CB	CC	CD	CE	CF	NRT
A-A	0.00	42.67	13.500	27.800	.000	.000	5.756	17.069	0.048	0.086	0.427	0.729	2.342	0.076
G-G	15.24	41.88	13.100	28.000	.567	.500	5.484	16.754	0.046	0.091	0.418	0.696	2.250	0.076
Y-Y	53.34	39.90	12.000	28.300	2.231	2.000	4.785	15.961	0.041	0.079	0.399	0.612	2.012	0.076
YA-YA	116.84	36.60	10.200	28.750	5.322	4.829	3.767	14.640	0.038	0.076	0.366	0.574	1.641	0.076

-C-	G-4	1	
-B-	F-3	1	
-A-	D-4	1	
DATUM	ZONE	SHEET	

MATING PART REFERENCE DATA	
POINT 'O' Ø	1113.76
CONE ANGLE	.000

7	COATING, ALUMINUM-INORGANIC	P16A-A93	GT10125
6	COATING, ALUMINUM-INORGANIC	P16A-A95	GT10626
5	ACPT REQT-BLADES & VANES	P29A-A99OG	GT10128
4	COMPR VANES-PROCESSING	P3C-A960	GT10833
3	X-Y COORDS (217X221)	324A5238	GT10356
2	APPLICABLE DWG NOTES	314A5140	GT10459
1	APPLIED PRACTICES	348A9200	HY0230261
IT.	NOMENCLATURE	IDENT	BHEL SPEC

LIST OF COMPLEMENTARY DOCUMENTS

TYPE OF PRODUCT OR NAME OF CUSTOMER/PROJECT: GAS TURBINE FR-6B

	NAME	SIGN.	DATE	NO. OF VAR.
DRN.	CNBS		01.06.99	
CHD.	R.SRINIVAS		01.06.99	NA
APPD.	K.N.M		01.06.99	

DEPT. CODE	UNTOL. DIMS. OR	SCALE	WEIGHT (KG)	REF. TO ASSY. DRG.	ITEM NO.	NO. OF ITEMS
423	E/M/F	NTS	0.32	-/NA	NA	NA

TITLE: VANE STATOR STG 5

CARD CODE

DRAWING NO. 0-351-29-61006 REV. 00

SHT. No. 01 NO OF SHT. 01

REV.	DATE	ALTERED CHD/APPD	ZONE

THE INFORMATION ON THIS DOCUMENT IS THE PROPERTY OF BHEL. IT MUST NOT BE USED DIRECTLY OR INDIRECTLY IN ANY WAY DETRIMENTAL TO THE INTEREST OF THE COMPANY

GENERAL DIMENSIONAL LIMITS,FITS & TOLERANCES AS PER HY0230261

COMPUTER FILE NAME 01294861.CTF

SIGN. AND DATE | REF. DWG. NO. 1095155 REV -

INVENTORY NO.

THIRD ANGLE PROJECTION

(ALL DIMENSIONS ARE IN mm)

DRG. NO. 0-351-29-61010 SH. 01 OF 01

NOTES:

1. FOR APPLICABLE DRAWING NOTES SEE ITEM 2.

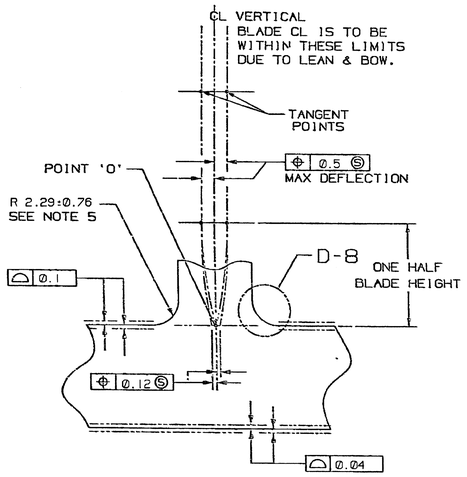

SECTION F-7 (G-3)

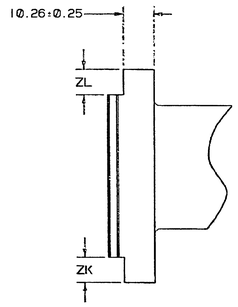

VIEW F-5 (G-5)

F-5 →

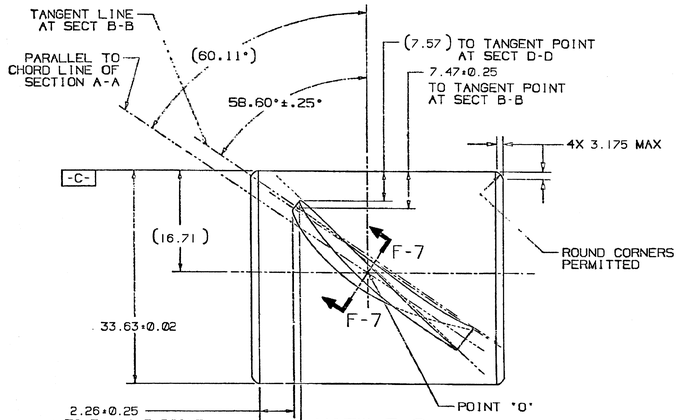

VIEW F-3 (F-3)

F-3 ↓

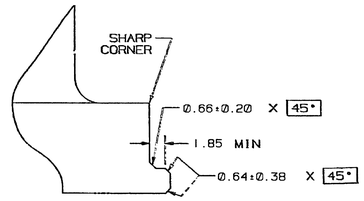

DETAIL E-5 (C-3)
(APPLIES TO BOTH SIDES OF BASE)

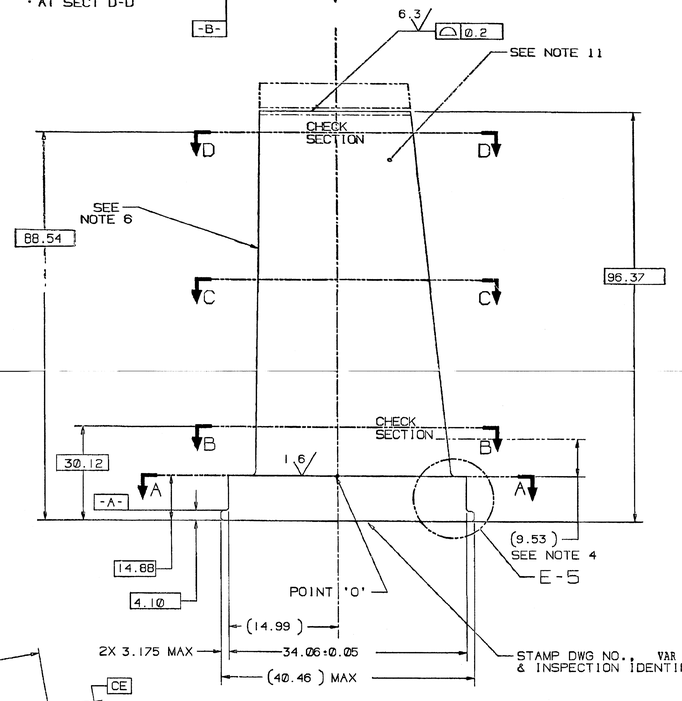

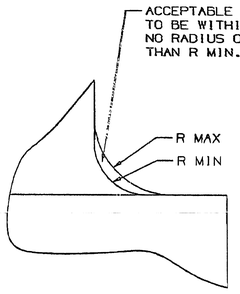

DETAIL D-8 (G-7)

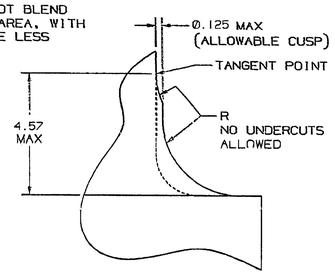

ALTERNATE METHOD OF MANUFACTURE
(REFER TO DETAIL D-8)

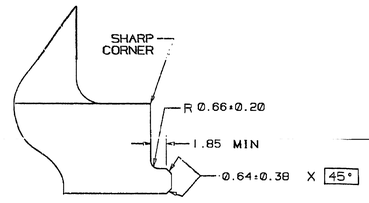

ALTERNATE METHOD OF MANUFACTURE
(REFER TO DETAIL E-5)

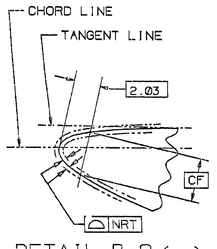

DETAIL B-8 (C-6)
(LEADING EDGE)

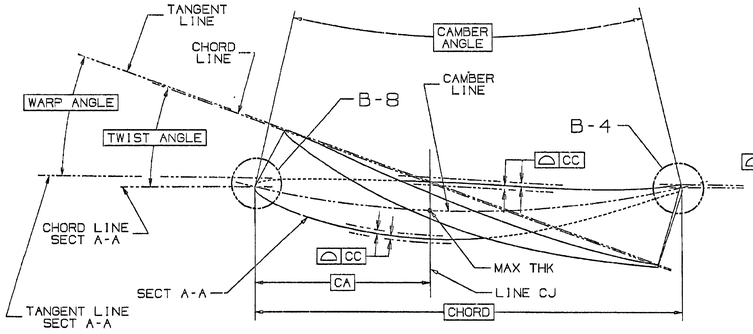

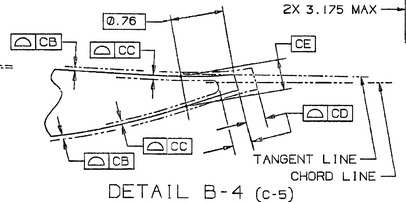

DETAIL B-4 (C-5)
(TRAILING EDGE)

VAR	ZK± 0.12	ZL±0.12	MATERIAL	COATING
01	OMIT	OMIT	HY10988	OMIT
02	OMIT	6.73	HY10988	OMIT
03	6.73	OMIT	HY10988	OMIT
04	OMIT	OMIT	HY10988	ITEM 6
05	OMIT	6.73	HY10988	ITEM 6
06	6.73	OMIT	HY10988	ITEM 6
07	OMIT	OMIT	HY10988	ITEM 7
08	OMIT	6.73	HY10988	ITEM 7
09	6.73	OMIT	HY10988	ITEM 7

-C-	G-4	1
-B-	F-3	1
-A-	D-4	1
DATUM	ZONE	SHEET

MATING PART REFERENCE DATA	
POINT 'O' Ø	1113.76
CONE ANGLE	.000

SECTION	SECTION HEIGHT	CHORD	PERCENT THICKNESS	CAMBER ANGLE	TWIST ANGLE	WARP ANGLE	THICKNESS AT 'CA'	CA	CB	CC	CD	CE	CF	NRT
A-A	0.00	34.80	13.500	24.600	.000	.000	4.694	13.920	0.038	0.079	0.348	0.612	2.116	0.076
B-B	15.24	34.14	12.800	24.600	.791	.600	4.376	13.655	0.038	0.076	0.340	0.594	1.989	0.076
C-C	45.72	32.79	11.604	24.600	2.434	1.967	3.835	13.116	0.038	0.076	0.328	0.584	1.770	0.076
D-D	73.66	31.55	10.399	24.600	4.006	3.317	3.335	12.619	0.038	0.076	0.315	0.576	1.559	0.076

IT.	NOMENCLATURE	IDENT	BHEL SPEC
7	COATING, ALUMINUM-INORGANIC	P16A-AG3	GT10125
6	COATING, ALUMINUM-INORGANIC	P16A-AG5	GT10606
5	ACPT REOT-BLADES & VANES	P29A-AG900	GT10128
4	COMPR VANES-PROCESSING	P3C-AG60	GT10093
3	X-Y COORDS (21TX359)	32A6231	GT10351
2	APPLICABLE DWG NOTES	31A451140	GT10459
1	APPLIED PRACTICES	34BA9200	HY0230261

LIST OF COMPLEMENTARY DOCUMENTS

TYPE OF PRODUCT OR NAME OF CUSTOMER/PROJECT: GAS TURBINE FR-6B

BHARAT HEAVY ELECTRICALS LIMITED
HYDERABAD

	NAME	SIGN.	DATE	NO.OF VAR.
DRN.	CMBS	R.Srinivas	06.04.99	NA
CHD.	R.SRINIVAS	R.Srinivas	06.04.99	
APPD.	K.N.M	K.Nair	06.04.99	

DEPT. STE CODE: 423 | UNTOL. DIMS. GR. E/N/F | SCALE NTS | WEIGHT (KG) 0.18 | REF. TO ASSY. DRG. – N/A | ITEM NO. NA | NO.OF ITEMS NA

TITLE: VANE STATOR, STG 9

CARD CODE | DRAWING NO. 0-351-29-61010 | REV. 00

SHT. No. 01 | NO OF SHT. 01

REV.	DATE	ALTERED CHD/APPD	ZONE

THE INFORMATION ON THIS DOCUMENT IS THE PROPERTY OF BHARAT HEAVY ELECTRICALS LIMITED. IT MUST NOT BE USED DIRECTLY OR INDIRECTLY IN ANY WAY DETRIMENTAL TO THE INTEREST OF THE COMPANY

GENERAL DIMENSIONAL LIMITS,FITS & TOLERANCES AS PER HY0230261

COMPUTER FILE NAME 01296101.TTF | REV. - | REF. DWG. NO. 10995159 | SUBJ. AND DATE | INVENTOR AND

THIRD ANGLE PROJECTION

(ALL DIMENSIONS ARE IN mm)

DRG. NO. 0-351-29-61014 SH. 01 OF 01

NOTES:

1. FOR APPLICABLE DRAWING NOTES SEE ITEM 2.

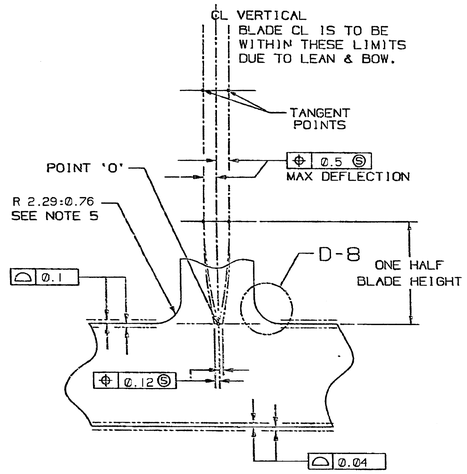

SECTION F-7 (G-3)

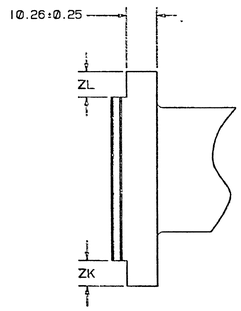

VIEW F-5 (G-5)

F-5 →

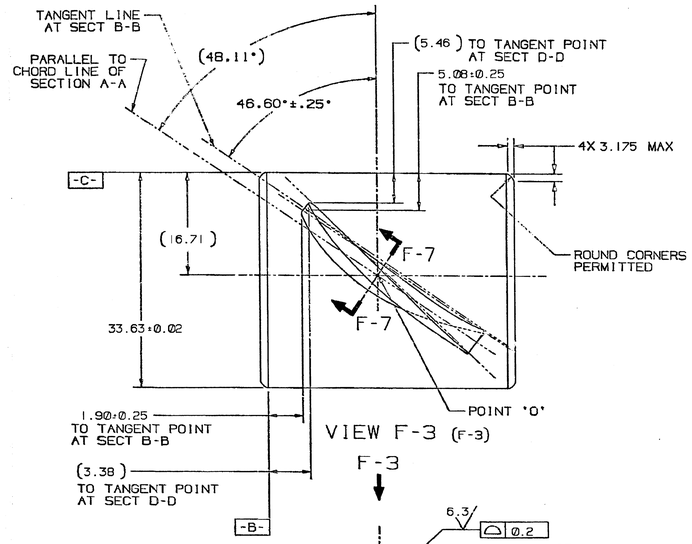

VIEW F-3 (F-3)

F-3 ↓

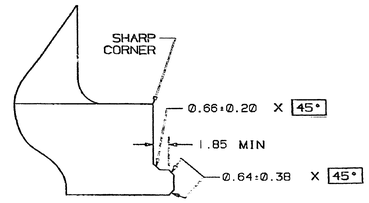

DETAIL E-5 (C-3)
(APPLIES TO BOTH SIDES OF BASE)

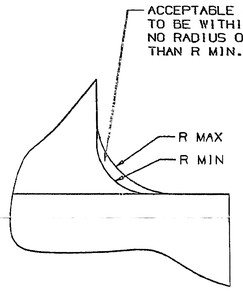

DETAIL D-8 (G-7)

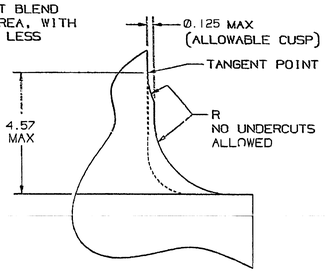

ALTERNATE METHOD OF MANUFACTURE
(REFER TO DETAIL D-8)

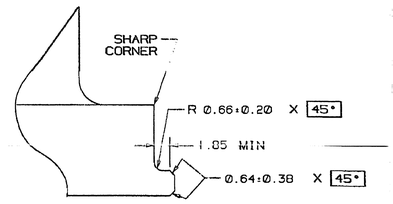

ALTERNATE METHOD OF MANUFACTURE
(REFER TO DETAIL E-5)

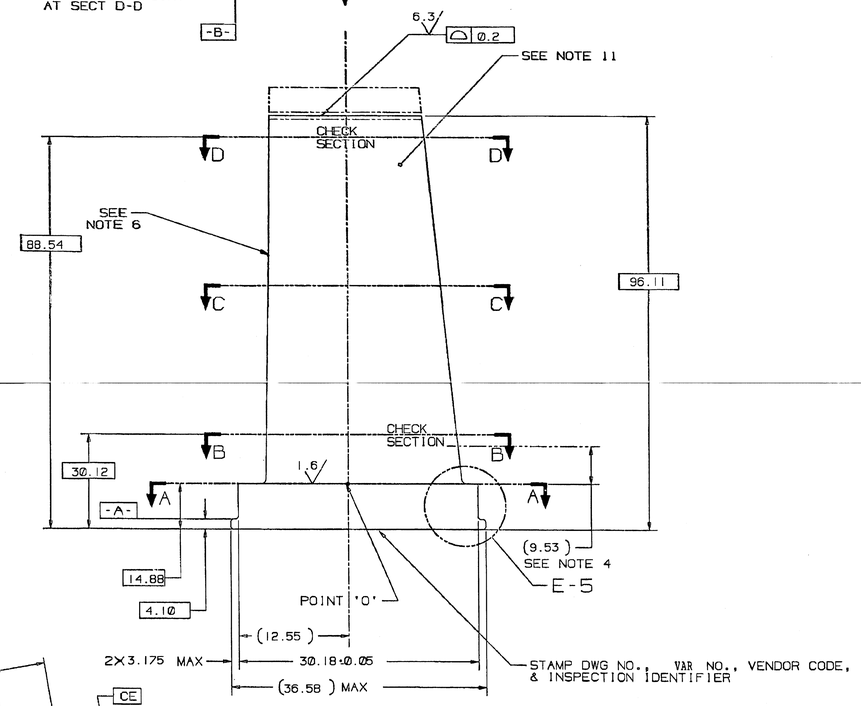

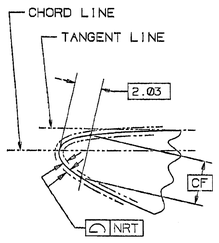

DETAIL B-8 (C-6)
(LEADING EDGE)

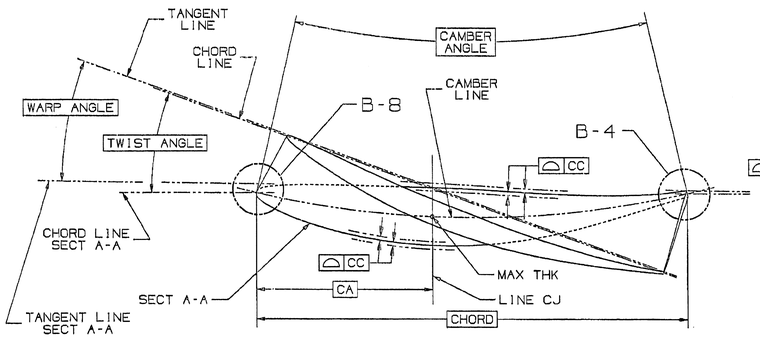

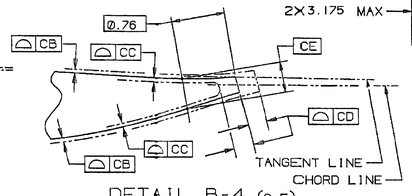

DETAIL B-4 (C-5)
(TRAILING EDGE)

VAR	ZK± 0.12	ZL±0.12	MATERIAL	COATING
01	OMIT	OMIT	HY10988	OMIT
02	OMIT	6.73	HY10988	OMIT
03	6.73	OMIT	HY10988	OMIT
04	OMIT	OMIT	HY10988	ITEM 6
05	OMIT	6.73	HY10988	ITEM 6
06	6.73	OMIT	HY10988	ITEM 6
07	OMIT	OMIT	HY10988	ITEM 7
08	OMIT	6.73	HY10988	ITEM 7
09	6.73	OMIT	HY10988	ITEM 7

-C-	G-4	1
-B-	F-3	1
-A-	D-4	1
DATUM	ZONE	SHEET

MATING PART REFERENCE DATA	
POINT 'O' Ø	1113.76
CONE ANGLE	.000

7	COATING, ALUMINUM-INORGANIC	P16A-AG3	GT10125
6	COATING, ALUMINUM-INORGANIC	P16A-AG5	GT10026
5	ACPT REOT-BLADES & VANES	P29A-AG900	GT10128
4	COMPR VANES-PROCESSING	P3C-AG60	GT10063
3	X-Y COORDS (21T3359)	32A5234	DT10351
2	APPLICABLE DWG NOTES	314A5140	GT10459
1	APPLIED PRACTICES	348A9200	HY0230261
IT.	NOMENCLATURE	IDENT	BHEL SPEC
	LIST OF COMPLEMENTARY DOCUMENTS		

SECTION	SECTION HEIGHT	CHORD	PERCENT THICKNESS	CAMBER ANGLE	TWIST ANGLE	WARP ANGLE	THICKNESS AT 'CA'	CA	CB	CC	CD	CE	CF	NRT
A-A	0.00	34.80	13.500	24.600	.000	.000	4.694	13.920	0.038	0.079	0.348	0.612	2.116	0.076
B-B	15.24	34.14	12.800	24.600	.791	.600	4.376	13.655	0.038	0.076	0.340	0.594	1.989	0.076
C-C	45.72	32.79	11.604	24.600	2.434	1.967	3.835	13.116	0.038	0.076	0.328	0.584	1.770	0.076
D-D	73.66	31.55	10.399	24.600	4.006	3.317	3.335	12.619	0.038	0.076	0.315	0.576	1.559	0.076

TYPE OF PRODUCT OR NAME OF CUSTOMER/PROJECT: GAS TURBINE FR-6B

BHARAT HEAVY ELECTRICALS LIMITED
HYDERABAD

	NAME	SIGN.	DATE	NO. OF VAR.
DRN.	CMBS		18.04.99	NA
CHD.	R.SRINIVAS		18.04.99	
APPD.	R.N.M		18.04.99	

DEPT. CODE: GTE (423) | UNTOL. DIMS. GR. E/N/F | SCALE: NTS | WEIGHT (KG): 0.18 | REF. TO ASSY. DRG.: - NA | ITEM NO.: NA | NO. OF ITEMS: NA

TITLE: VANE STATOR, STG 13

CARD CODE | DRAWING NO. 0-351-29-61014 | REV. 00 | SHT. No. 01 | NO OF SHT. 01

REV.	DATE	ALTERED CHD/APPD	ZONE

THE INFORMATION ON THIS DOCUMENT IS THE PROPERTY OF BHARAT HEAVY ELECTRICALS LIMITED. IT MUST NOT BE USED DIRECTLY OR INDIRECTLY IN ANY WAY DETRIMENTAL TO THE INTEREST OF THE COMPANY

GENERAL DIMENSIONAL LIMITS,FITS & TOLERANCES AS PER HY0230261

SIGN. AND DATE | REF. DWG. NO. 1095563 REV - | COMPUTER FILE NAME 0129614L.TIF | INVENTORY NO.

THIRD ANGLE PROJECTION

(ALL DIMENSIONS ARE IN mm)

DRG. NO. 0-351-29-61019 SH. 01 OF 01

NOTES:

1. FOR APPLICABLE DRAWING NOTES SEE ITEM 2.

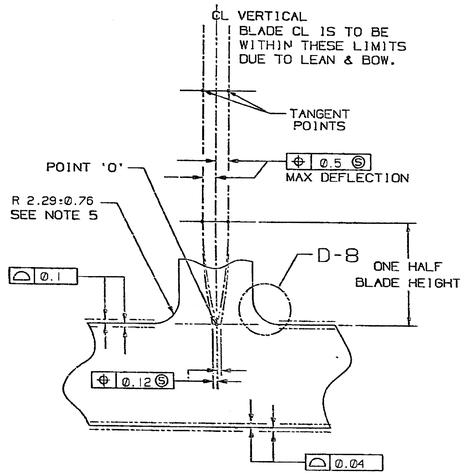

SECTION F-7 (G-3)

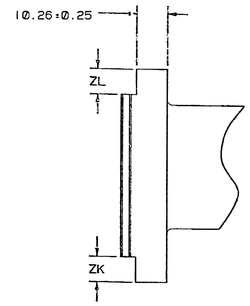

VIEW F-5 (G-5)

F-5 →

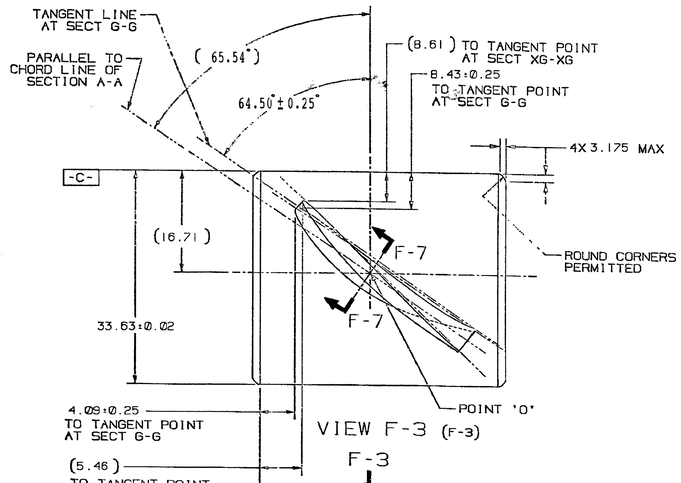

VIEW F-3 (F-3)

F-3 ↓

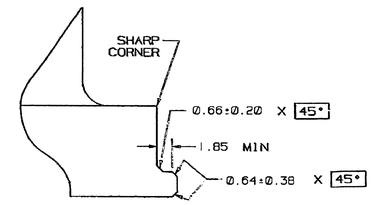

DETAIL E-5 (C-3)
(APPLIES TO BOTH SIDES OF BASE)

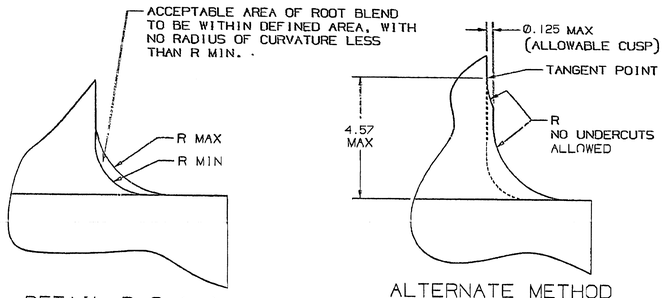

DETAIL D-8 (G-7)

ALTERNATE METHOD OF MANUFACTURE
(REFER TO DETAIL D-8)

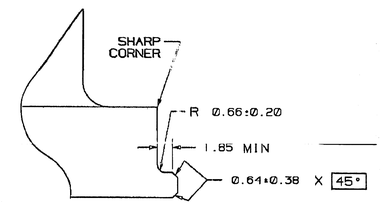

ALTERNATE METHOD OF MANUFACTURE
(REFER TO DETAIL E-5)

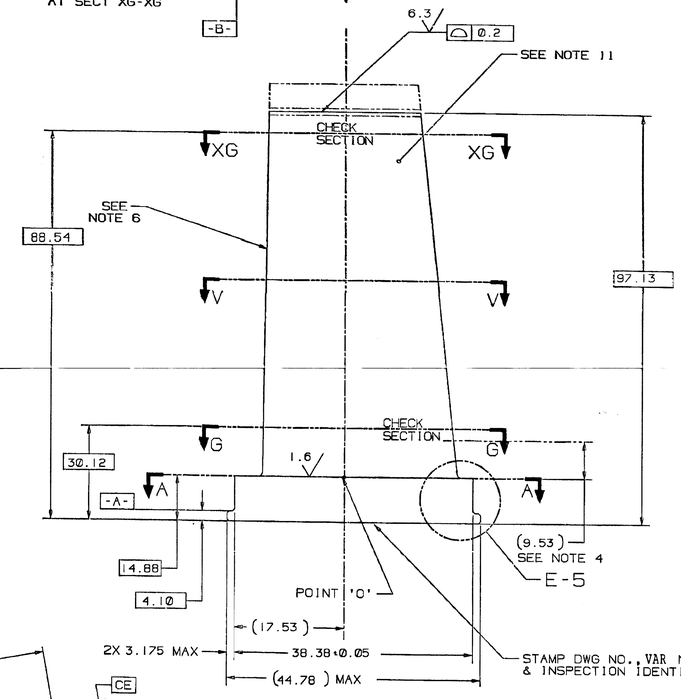

VAR	ZK ± 0.12	ZL ± 0.12	MATERIAL	COATING
01	OMIT	OMIT	HY10988	OMIT
02	OMIT	6.73	HY10088	OMIT
03	6.73	OMIT	HY10988	OMIT
04	OMIT	OMIT	HY10088	ITEM 6
05	OMIT	6.73	HY10088	ITEM 6
06	6.73	OMIT	HY10088	ITEM 6
07	OMIT	OMIT	HY10988	ITEM 7
08	OMIT	6.73	HY10988	ITEM 7
09	6.73	OMIT	HY10988	ITEM 7

-C-	G-4	1
-B-	F-3	1
-A-	D-4	1
DATUM	ZONE	SHEET

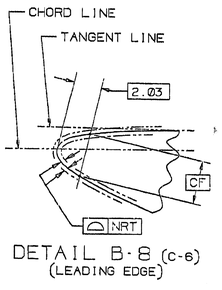

DETAIL B-8 (C-6)
(LEADING EDGE)

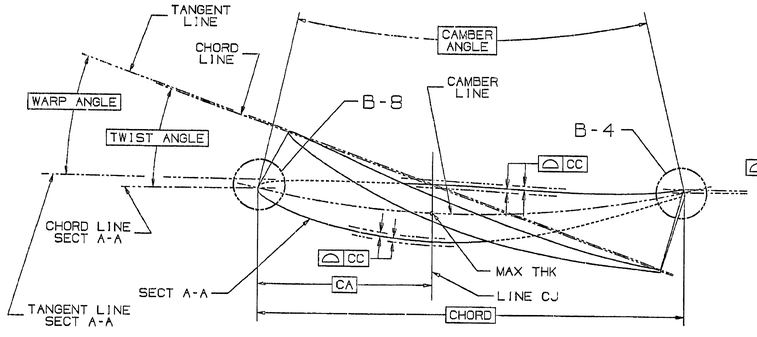

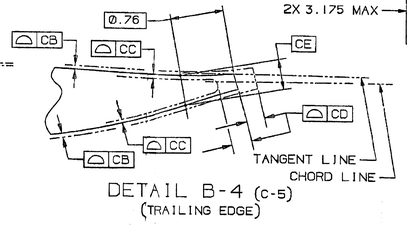

DETAIL B-4 (C-5)
(TRAILING EDGE)

SECTION	SECTION HEIGHT	CHORD	PERCENT THICKNESS	CAMBER ANGLE	TWIST ANGLE	WARP ANGLE	THICKNESS AT 'CA'	CA	CB	CC	CD	CE	CF	NRT
A-A	0.00	34.80	13.500	29.5	0.00	0.00	4.694	13.920	0.038	0.079	0.348	0.612	2.108	0.076
G-G	15.24	34.14	12.800	29.8	0.625	0.50	4.376	13.655	0.038	0.076	0.340	0.594	1.979	0.076
V-V	45.72	32.79	11.604	30.3	1.821	1.50	3.835	13.116	0.038	0.076	0.328	0.584	1.763	0.076
XG-XG	73.66	31.55	10.399	30.8	2.785	2.30	3.335	12.619	0.038	0.076	0.315	0.574	1.552	0.076

MATING PART REFERENCE DATA	
POINT 'O' Ø	1113.76
CONE ANGLE	.000

7	COATING, ALUMINUM-INORGANIC	P16A-A63	GT10125
6	COATING, ALUMINUM-INORGANIC	P16A-A65	GT10606
5	ACPT REOT-BLADES & VANES	P29A-AG900	GT10128
4	COMPR VANES-PROCESSING	P3C-A060	GT10263
3	X-Y COORDS (216X942)	342A1111	GT10350
2	APPLICABLE DWG NOTES	314A5140	GT10459
1	APPLIED PRACTICES	348A9200	HY0230261
IT.	NOMENCLATURE	IDENT	BUEL SPEC
LIST OF COMPLEMENTARY DOCUMENTS			

TYPE OF PRODUCT OR NAME OF CUSTOMER/PROJECT: GAS TURBINE FR-6B

BHARAT HEAVY ELECTRICALS LIMITED HYDERABAD

	NAME	SIGN	DATE	NO. OF VAR.
DRN.	CMBS			NA
CHD.	A.SRINIVAS			
APPD.	Y.K.M			

DEPT. CODE 423 | UNTOL. DIMS. CR. ±1/N/F | SCALE NIS | WEIGHT (KG) 0.22 | REF. TO ASSY. DRG. - NA | ITEM NO. NA | NO. OF ITEMS NA

TITLE: VANE STATOR EGV1

CARD CODE | DRAWING NO. 0-351-29-61019 | REV. 00

SHT. No 01 | NO OF SHT. 01

REV.	DATE	ALTERED	CHD/APPD

ZONE

THE INFORMATION ON THIS DOCUMENT IS THE PROPERTY OF BHARAT HEAVY ELECTRICALS LIMITED. IT MUST NOT BE USED DIRECTLY OR INDIRECTLY IN ANY WAY DETRIMENTAL TO THE INTEREST OF THE COMPANY

GENERAL DIMENSIONAL LIMITS, FITS & TOLERANCES AS PER HY0230261

COMPUTER FILE NAME 01296191.TIF | REF. DRG. NO. 10992168 REV - | SCH. AND DATE | INCORPORATED

THIRD ANGLE PROJECTION

(ALL DIMENSIONS ARE IN mm)

SH. 01 OF 01 DRG. NO 0-35129-91009

NOTES:

1. FOR APPLICABLE DRAWING NOTES SEE ITEM 2.

DRAWING		PRECISION MASTER	
PT NO	REV	DWG NO	REV
1-9, 102-103	C	217X237	—

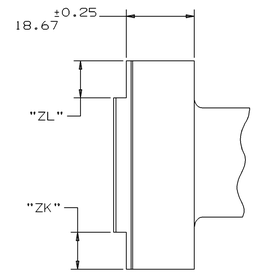

VIEW G-5 (G-4)

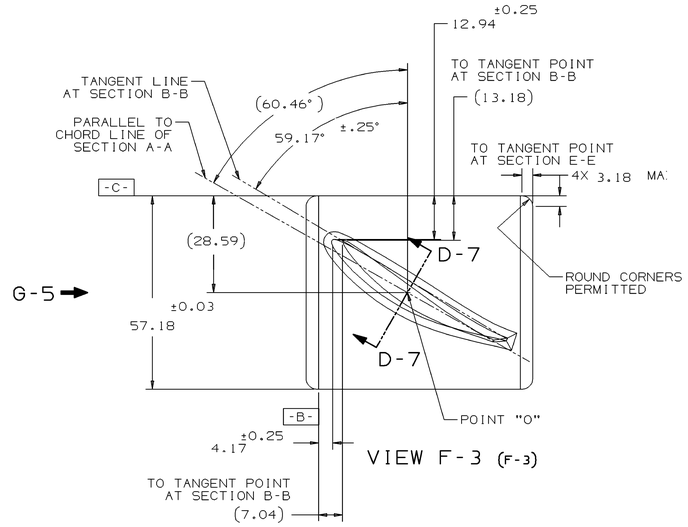

VIEW F-3 (F-3)

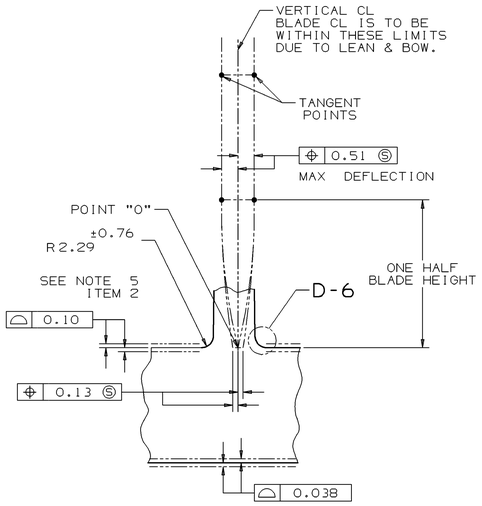

SECTION D-7 (G-3)

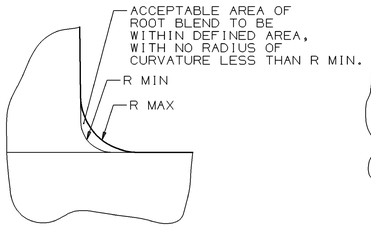

DETAIL D-6 (E-7)

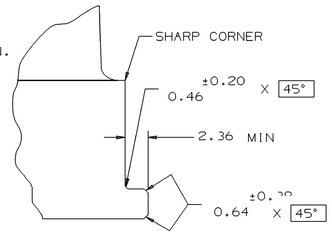

DETAIL D-5 (C-2)
(APPLIES TO BOTH SIDES OF BASE)

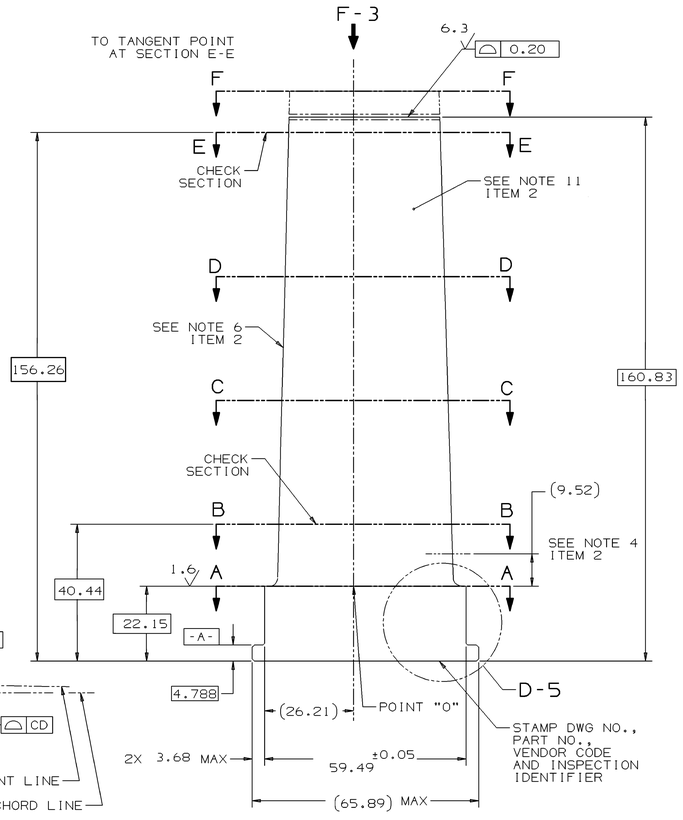

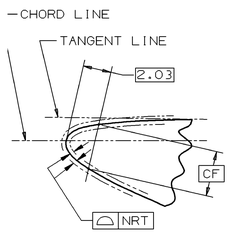

DETAIL B-8 (C-6)
(LEADING EDGE)

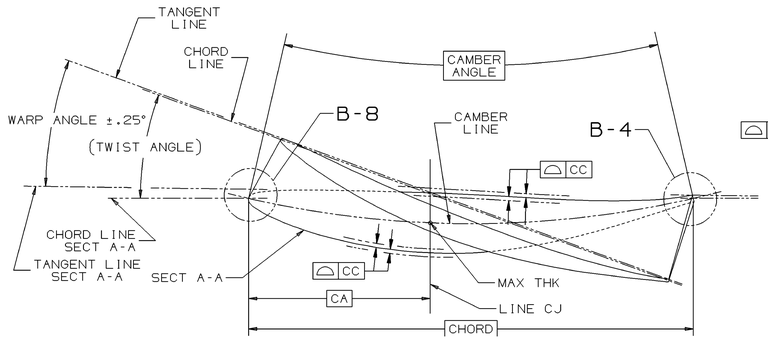

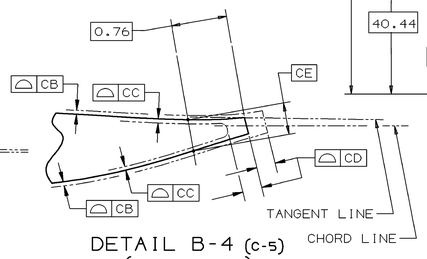

DETAIL B-4 (C-5)
(TRAILING EDGE)

SEE NOTES 9 & 10, ITEM 2

SECTION	SECTION HEIGHT FROM POINT "O"	CHORD	PERCENT THICKNESS	CAMBER ANGLE	TWIST ANGLE	WARP ANGLE ±.25	THICKNESS AT "CA"	CA	CB	CC	CD	CE	CF	NRT
A-A	0,000	59,436	342,900	24.6000	.0000	.0000	8,019	23,774	0,066	0,135	0,594	0,980	2,784	0,076
B-B	18,288	58,623	331,343	24.6000	.5000	.3840	7,643	23,449	0,064	0,127	0,587	0,935	2,672	0,076
C-C	54,864	57,023	308,204	24.6000	1.5500	1.2410	6,914	22,809	0,058	0,114	0,569	0,848	2,449	0,076
D-D	91,440	55,397	285,064	24.6000	2.7000	2.2480	6,213	22,159	0,051	0,104	0.554	0,765	2,233	0,076
E-E	134,112	53,518	258,064	24.6000	4.0500	3.4590	5,433	21,407	0,046	0,091	0,536	0,671	1,984	0,076
F-F	146,304	52,984	250,368	24.6000	4.4500	3.8270	5,220	21,194	0,043	0,086	0,531	0,645	1,915	0,076

03	P103	OMIT	11.91
02	P102	11.91	OMIT
01	P001	OMIT	OMIT
VAR	GE PT. NO.	ZK±0.13	ZL±0.13

MATING PART REFERENCE DATA	
POINT 'O' Ø	1893.42
CONE ANGLE	.000

7	COATING, ALUMINUM INORGANIC	P16A-AG3	
6	COATING, ALUMINUM INORGANIC	P16A-AG5	
5	ACPT REQT BLADES & VANES	P29A-AG900	GT10128
4	COMPR VANES PROCESSING	P3C-AG60	GT10083
3	X-Y COORDS	287A7837	GT10698
2	APPLICABLE DWG NOTES	314A5112	GT10459
1	APLD PRAC, GENL MACH	348A9200	GT10582
	NOMENCLATURE	IDENT	BHELSPEC
	LIST OF COMPLEMENTARY DOCUMENTS		

C	H-3	1
B	G-8	2
A	F-6	1
DATUM	ZONE	SHEET

THIRD ANGLE PROJECTION

GENERAL DIMENSIONAL LIMITS,FITS & TOLERANCES AS PER HY0230261

THE INFORMATION ON THIS DOCUMENT IS THE PROPERTY OF BHARAT HEAVY ELECTRICALS LIMITED. IT MUST NOT BE USED DIRECTLY OR INDIRECTLY IN ANY WAY DETRIMENTAL TO THE INTEREST OF THE COMPANY

COMPUTER FILE NAME 0351291009-0000000.TIF

REF. DRG. NO. 109E5112 REV C

SIGN. AND DATE

INVENTORY NO

REV.	DATE	ALTERED CHD/APPD	REV.	DATE	ALTERED CHD/APPD	REV.	DATE	ALTERED CHD/APPD	REV.	DATE	ALTERED CHD/APPD	REV.	DATE	ALTERED CHD/APPD	REV.	DATE	ALTERED CHD/APPD	REV.	DATE	ALTERED CHD/APPD	REV.	DATE	ALTERED CHD/APPD	REV.	DATE	ALTERED CHD/APPD	REV.	DATE	ALTERED CHD/APPD	REV.	DATE	ALTERED - CHD/APPD -
ZONE			ZONE			ZONE			ZONE			ZONE			ZONE			ZONE			ZONE			ZONE			ZONE			ZONE		

TYPE OF PRODUCT OR

NAME OF CUSTOMER/PROJECT

BHEL SHARAT HEAVY ELECTRICALS LIMITED HYDERABAD

	NAME	SIGN.	DATE	NO.OF VAR.
DRN.	SCS		06-12-06	NA
CHD.	AJAY		06-12-06	
APPD.	S.SRIRAM		06-12-06	

DEPT. CODE	UNTOL. DIMS.	SCALE	WEIGHT (KG)	REF. TO ASSY. DRG.	ITEM NO.	NO.OF ITEMS
GTD 423	GR. 6/N/F	NTS	0.86	109E5112	NA	NA

TITLE: VANE STATOR STG 9

CARD CODE

DRAWING NO. 0-35129-91009

REV. 00

SHT. No 01 NO OF SHT. 01

THIRD ANGLE PROJECTION

(ALL DIMENSIONS ARE IN mm)

DRG. NO 0-35129-91013 SH. 01 OF 01

NOTES:

1. FOR APPLICABLE DRAWING NOTES SEE ITEM 2.

DRAWING		PRECISION MASTER	
PT NO	REV	DWG NO	REV
1-9, 102-103	C	217X237	—

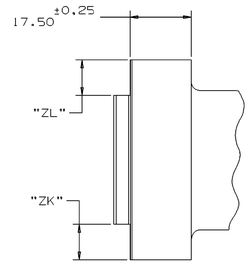

VIEW G-5 (G-4)

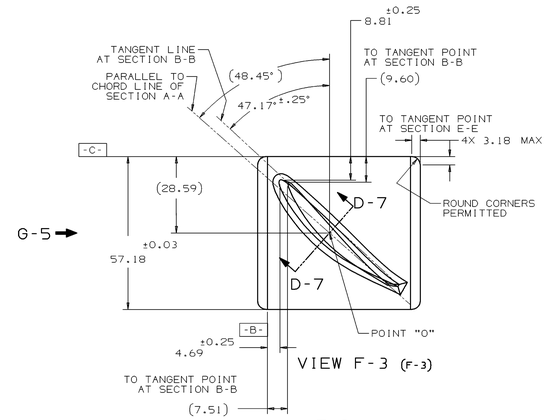

VIEW F-3 (F-3)

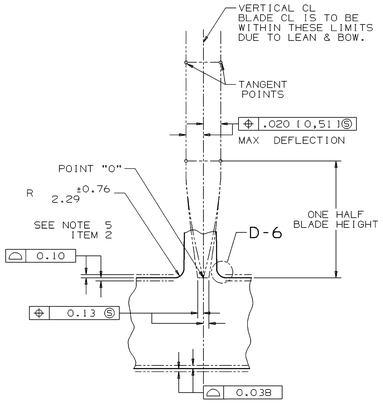

SECTION D-7 (G-3)

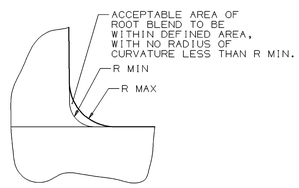

DETAIL D-6 (E-7)

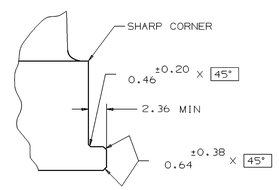

DETAIL D-5 (C-2)
(APPLIES TO BOTH SIDES OF BASE)

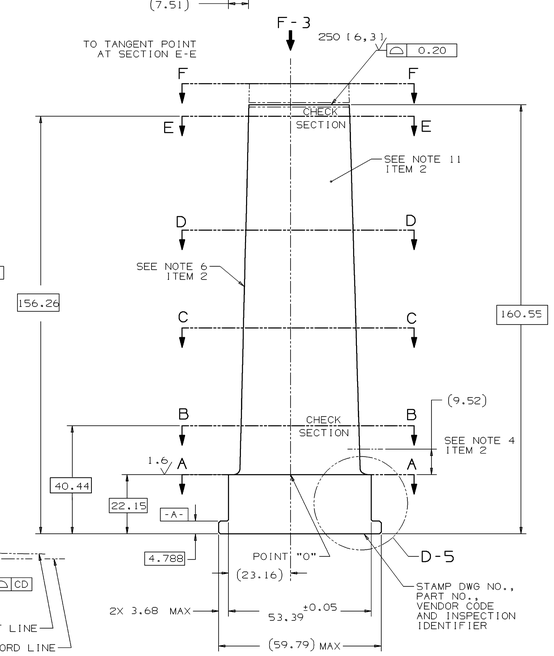

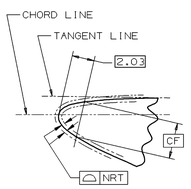

DETAIL B-8 (C-6)
(LEADING EDGE)

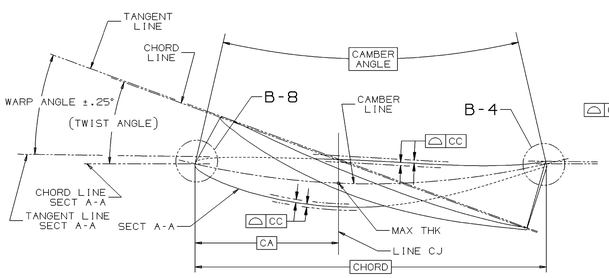

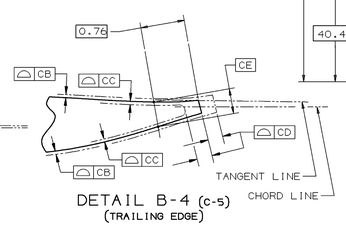

DETAIL B-4 (C-5)
(TRAILING EDGE)

SEE NOTES 9 & 10, ITEM 2

SECTION	SECTION HEIGHT FROM POINT "O"	CHORD	PERCENT THICKNESS	CAMBER ANGLE	TWIST ANGLE	WARP ANGLE ±.25	THICKNESS AT "CA"	CA	CB	CC	CD	CE	CF	NRT
A-A	0.000	59.436	342.900	24.6000	.0000	.0000	8.019	23.774	0.066	0.135	0.594	0.980	2.784	0.076
B-B	18.288	58.623	331.343	24.6000	.5000	.3840	7.643	23.449	0.064	0.127	0.587	0.935	2.672	0.076
C-C	54.864	57.023	308.204	24.6000	1.5500	1.2410	6.914	22.809	0.058	0.114	0.569	0.848	2.449	0,076
D-D	91.440	55.397	285.064	24.6000	2.7000	2.2480	6.213	22.159	0.051	0.104	0.554	0.765	2.233	0.076
E-E	134.112	53.518	258.064	24.6000	4.0500	3.4590	5.433	21.407	0.046	0.091	0.536	0.671	1.984	0.076
F-F	146.304	52.984	250.368	24.6000	4.4500	3.8270	5.220	21.194	0.043	0.086	0.531	0.645	1.915	0.076

03	P103	OMIT	11.91
02	P102	11.91	OMIT
01	P001	OMIT	OMIT
VAR	GE PT. NO.	ZK±0.13	ZL±0.13

MATING PART REFERENCE DATA	
POINT 'O' Ø	1893.42
CONE ANGLE	.000

7	COATING, ALUMINUM INORGANIC	P16A-A63	
6	COATING, ALUMINUM INORGANIC	P16A-A95	
5	ACPT REQT BLADES & VANES	P29A-A9900	GT10128
4	COMPR VANES PROCESSING	P3C-A960	GT10083
3	X-Y COORDS	287A7837	GT10698
2	APPLICABLE DWG NOTES	314A5112	GT10459
1	APLD PRAC, GENL MACH	348A9200	GT10582
	NOMENCLATURE	IDENT	BHELSPEC
	LIST OF COMPLEMENTARY DOCUMENTS		

C	H-3	1
B	G-8	2
A	F-6	1
DATUM	ZONE	SHEET

THIRD ANGLE PROJECTION

TYPE OF PRODUCT OR

NAME OF CUSTOMER/PROJECT

BHARAT HEAVY ELECTRICALS LIMITED
HYDERABAD

	NAME	SIGN.	DATE	NO.OF VAR.
DRN.	SCS		06-12-06	NA
CHD.	AJAY		06-12-06	
APPD.	S.SRIRAM		06-12-06	

DEPT.	UNTOL. DIMS.	SCALE	WEIGHT (KG)	REF. TO ASSY. DRG.	ITEM NO.	NO.OF ITEMS
GTD CODE 423	GR. 8/M/f	NTS	0.82	109E5116	NA	NA

TITLE: VANE STATOR STG 13

CARD CODE

DRAWING NO. 0-35129-91013 REV. 00

SHT. No 01 NO OF SHT. 01

REV.	DATE	ALTERED CHD/APPD	REV.	DATE	ALTERED CHD/APPD	REV.	DATE	ALTERED CHD/APPD	REV.	DATE	ALTERED CHD/APPD	REV.	DATE	ALTERED CHD/APPD	REV.	DATE	ALTERED CHD/APPD	REV.	DATE	ALTERED CHD/APPD	REV.	DATE	ALTERED CHD/APPD	REV.	DATE	ALTERED CHD/APPD	REV.	DATE	ALTERED CHD/APPD	REV.	DATE	ALTERED CHD/APPD
ZONE			ZONE			ZONE			ZONE			ZONE			ZONE			ZONE			ZONE			ZONE			ZONE			ZONE		

THE INFORMATION ON THIS DOCUMENT IS THE PROPERTY OF BHARAT HEAVY ELECTRICALS LIMITED. IT MUST NOT BE USED DIRECTLY OR INDIRECTLY IN ANY WAY DETRIMENTAL TO THE INTEREST OF THE COMPANY

GENERAL DIMENSIONAL LIMITS,FITS & TOLERANCES AS PER HY023026I

REF. DRG. 109E5116 REV.C

COMPUTER FILE NAME 0351299101-SQP400.TIF

SIGN. AND DATE

INVENTORY NO

THIRD ANGLE PROJECTION

(ALL DIMENSIONS ARE IN mm)

DRG. NO. 0-353-05-61005 SH. 1 OF 1

NOTES:

1. FOR APPLICABLE DRAWING NOTES SEE ITEM 2.

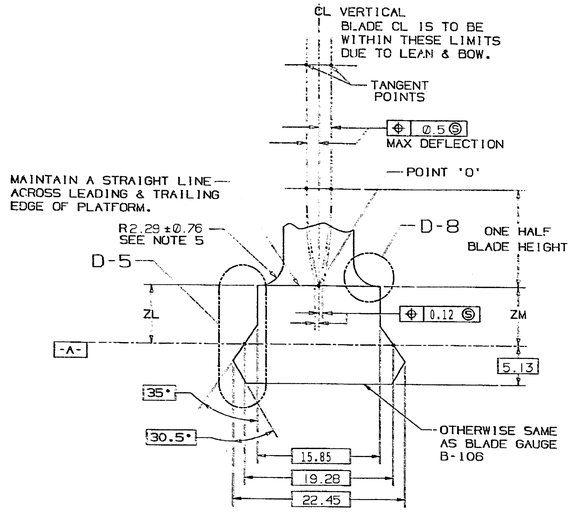

SECTIONS BA-BA, BB-BB & BC-BC (G-3)

SEE NOTE 6

SECTION	ZL ± 0.25	ZM ± 0.25
BA-BA	5.76	5.16
BB-BB	6.17	5.13
BC-BC	6.12	4.62

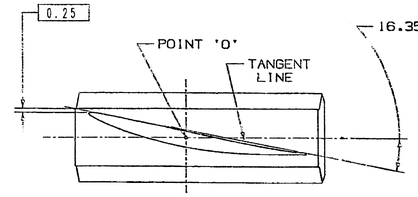

SECTION E-E (E-3)

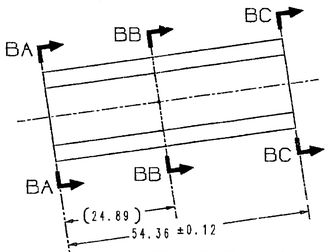

VIEW G-3 (F-3)
(AIRFOIL DELETED FOR CLARITY)

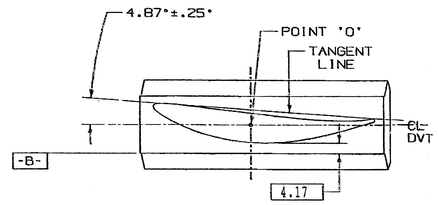

SECTION B-B (D-3)

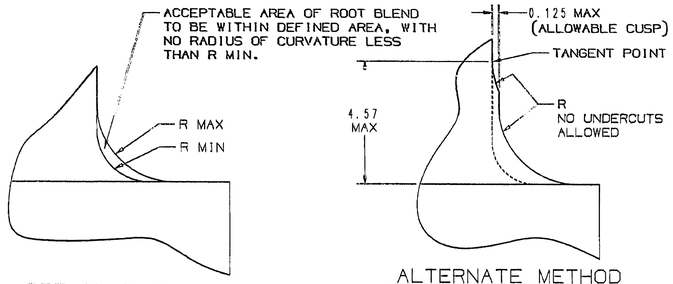

DETAIL D-8 (G-7)

ALTERNATE METHOD OF MANUFACTURE
(REFER TO DETAIL D-8)

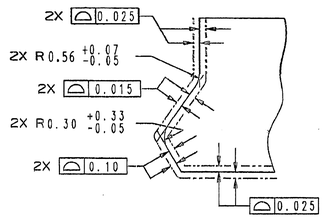

DETAIL D-5 (G-7)

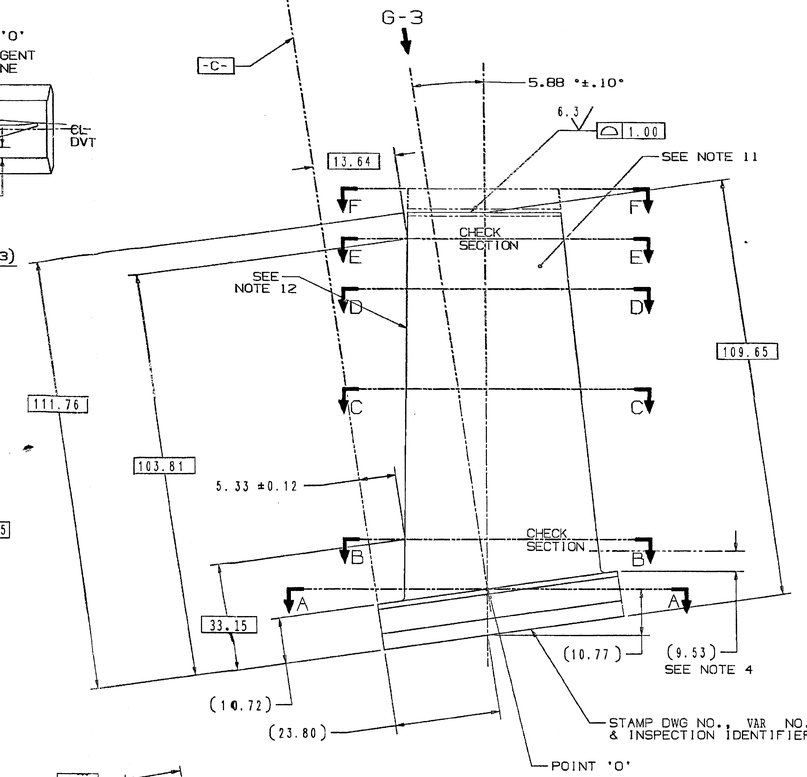

-C-	F-4	1
-B-	F-R	1
-A-	F-8	1
DATUM	ZONE	SHEET

MATL HY10996 (C450) OMSA VAR 01	-	10
COAT PER ITEM 7 OMSA VAR 01	P3	03
COAT PER ITEM 6 OMSA VAR 01	P2	02
MATL HY10988 (AISI 403 Cb)	P1	01
DESCRIPTION	REF	VAR

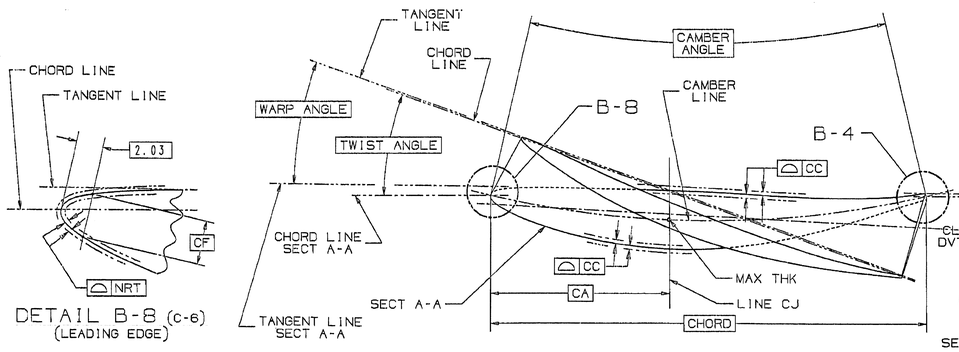

DETAIL B-8 (C-6)
(LEADING EDGE)

SEE NOTES 9 & 10

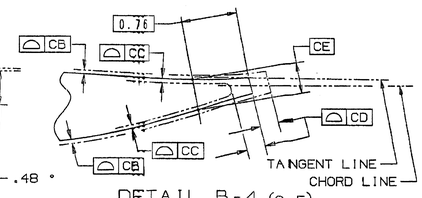

DETAIL B-4 (C-5)
(TRAILING EDGE)

SECTION	SECTION HEIGHT	CHORD	PERCENT THICKNESS	CAMBER ANGLE	TWIST ANGLE	WARP ANGLE	THICKNESS AT 'CA'	CA	CB	CC	CD	CE	CF	NRT
A-A	0.00	48.26	13.500	30.750	.000	.000	6.510	19.304	0.053	0.109	0.483	0.813	2.487	0.076
B-B	20.32	48.26	12.400	27.071	4.841	4.867	5.980	19.304	0.050	0.100	0.483	0.747	2.291	0.076
C-C	50.80	48.26	10.700	23.000	10.698	10.684	5.160	19.304	0.043	0.086	0.483	0.645	2.057	0.076
D-D	78.74	48.26	9.100	19.750	14.804	14.705	4.396	19.304	0.038	0.076	0.483	0.569	1.692	0.076
E-E	91.44	48.26	8.500	18.500	16.463	16.319	4.120	19.304	0.038	0.076	0.483	0.564	1.582	0.076
F-F	111.74	48.26	7.300	17.000	18.845	18.565	3.570	19.304	0.038	0.076	0.483	0.566	1.364	0.076

MATING PART REFERENCE DATA

POINT 'O' Ø	894.79
RIM ANGLE	6.767
DOVETAIL ANGLE	56.900

7	COATING, ALUMINUM-INORGANIC	P16A-AG3	GT10125
6	COATING, ALUMINUM-INORGANIC	P16A-AG5	GT10606
5	ACPT REQT-BLADES & VANES	P29A-AG900	GT10128
4	COMPR VANES-PROCESSING	P3C-AG80	GT10083
3	X-Y COORDS (217X368)	32AA5243	GT10134
2	APPLICABLE DWG NOTES	31AA5112	GT10607
1	APPLIED PRACTICES	34BA9200	HY0230261
IT.	NOMENCLATURE	IDENT	SPECN

LIST OF COMPLEMENTARY DOCUMENTS

TYPE OF PRODUCT OR NAME OF CUSTOMER/PROJECT: GASTURBINE Fr-6

BHARAT HEAVY ELECTRICALS LIMITED HYDERABAD

	NAME	SIGN.	DATE	NO. OF VAR.
DRN.	SCS		24-3-99	NA
CHD.	BS		24-3-99	NA
APPD.	RMM		24-3-99	

DEPT. GTD CODE 423 | UNTOL. DIMS. GR. C/M/F | SCALE NTS | WEIGHT (KG) 0.23 | REF. TO ASSY. DWG. NA | ITEM NO. NA | NO. OF ITEMS NA

TITLE: BLADE, ROTOR-STG 8

CARD CODE NA | DRAWING NO. 0-353-05-61005 | REV. 00 | SHT. No. 1 | NO OF SHT. 1

REV.	DATE	ALTERED	CHD/APPD	ZONE

THE INFORMATION ON THIS DOCUMENT IS THE PROPERTY OF BHARAT HEAVY ELECTRICALS LIMITED. IT MUST NOT BE USED DIRECTLY OR INDIRECTLY IN ANY WAY DETRIMENTAL TO THE INTEREST OF THE COMPANY.

GENERAL DIMENSIONAL LIMITS, FITS & TOLERANCES AS PER HY0230261

COMPUTER FILE NAME 0353-05-61005.TIF | REF. DRG. NO. 1695117 REV -'- | SIGN. AND DATE | INVENTOR NO.

THIRD ANGLE PROJECTION

(ALL DIMENSIONS ARE IN mm)

DRG. NO. 0-353-05-61009 SH. 1 OF 1

NOTES:

1. FOR APPLICABLE DRAWING NOTES SEE ITEM 2.

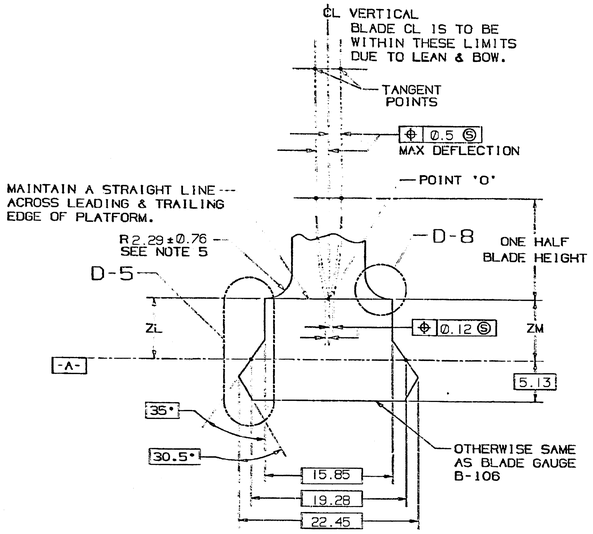

SECTIONS BA-BA, BB-BB & BC-BC (G-3)

SEE NOTE 6

SECTION	ZL +0.000 -0.508	ZM +0.000 -0.508
BA-BA	3.023	5.791
BB-BB	6.985	6.985
BC-BC	6.146	3.708

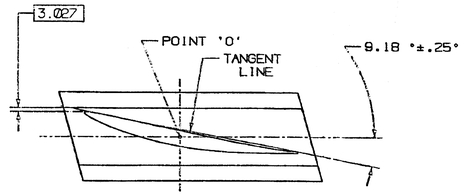

SECTION E-E (E-3)

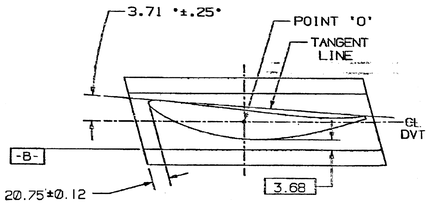

SECTION B-B (D-3)

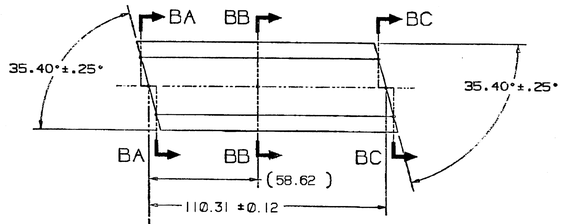

VIEW G-3 (F-3)
(AIRFOIL DELETED FOR CLARITY)

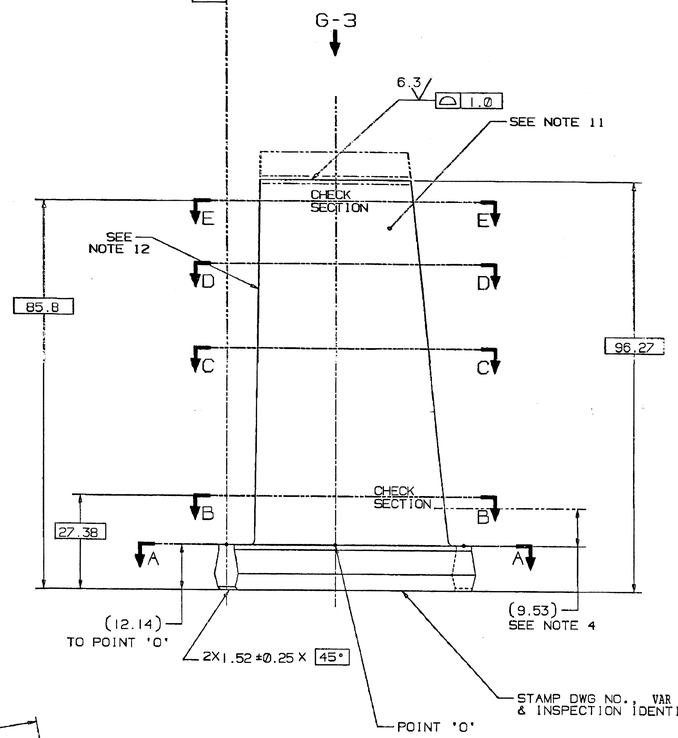

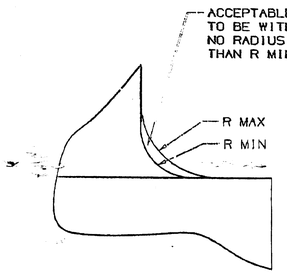

DETAIL D-8 (G-7)

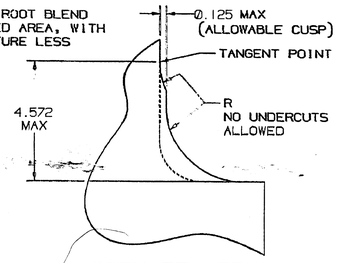

ALTERNATE METHOD OF MANUFACTURE
(REFER TO DETAIL D-8)

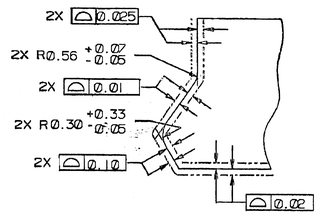

DETAIL D-5 (G-7)

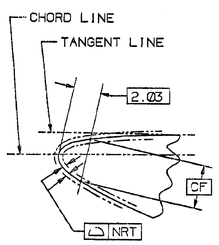

DETAIL B-8 (C-6)
(LEADING EDGE)

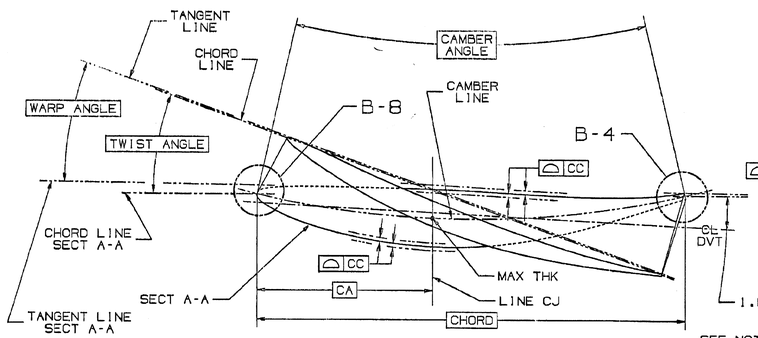

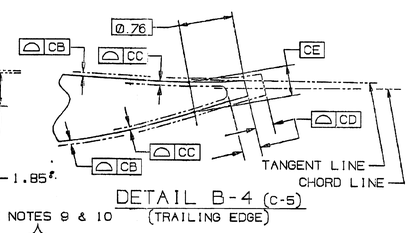

DETAIL B-4 (C-5)
(TRAILING EDGE)

SEE NOTES 9 & 10

SECTION	SECTION HEIGHT	CHORD	PERCENT THICKNESS	CAMBER ANGLE	TWIST ANGLE	WARP ANGLE	THICKNESS AT 'CA'	CA	CB	CC	CD	CE	CF	NRT
A-A	0.00	54.43	17.500	19.000	.000	.000	9.517	21.772	0.079	0.160	0.544	1.176	3.462	0.114
B-B	15.24	54.43	14.000	16.700	2.800	1.637	7.615	21.772	0.064	0.127	0.544	0.939	2.774	0.076
C-C	30.48	54.43	11.400	15.000	5.200	3.174	6.200	21.772	0.051	0.104	0.544	0.767	2.261	0.076
D-D	45.72	54.43	9.800	13.500	7.400	4.970	5.330	21.772	0.046	0.089	0.544	0.658	1.946	0.076
E-E	73.66	54.43	7.400	11.400	10.200	7.102	4.049	21.772	0.038	0.076	0.544	0.556	1.471	0.076

-C-	F-4	1
-B-	F-ft	1
-A-	F-8	1
DATUM	ZONE	SHEET

MATL HY10996 (C450)OWSA VAR 01	-	10
COAT PER ITEM 7 OWSA VAR 01	P3	03
COAT PER ITEM 6 OWSA VAR 01	P2	02
MATL HY10988 (AISI 403 Cb)	P1	0
DESCRIPTION	REF	VAR

MATING PART REFERENCE DATA	
POINT 'O' Ø	948.44
RIM ANGLE	.000
DOVETAIL ANGLE	35.400

7	COATING, ALUMINUM-INORGANIC	P16A-A63	GT10125
6	COATING, ALUMINUM-INORGANIC	P16A-A95	GT70606
5	ACPT REOT-BLADES & VANES	P29A-A9900	GT10123
4	COMPR VANES-PROCESSING	P3C-A960	GT10033
3	X-Y COORDS (FOR 217X412)	342A1100	GT10357
2	APPLICABLE DWG NOTES	314A5112	GT10607
1	APPLIED PRACTICES	348A9200	HY0230261
IT.	NOMENCLATURE	IDENT	SPECN
LIST OF COMPLEMENTARY DOCUMENTS			

TYPE OF PRODUCT OR NAME OF CUSTOMER/PROJECT: GAS TURBINE FR-6

BHARAT HEAVY ELECTRICALS LIMITED
HYDERABAD

	NAME	SIGN.	DATE
DRN.	SCS	R.Ganesh	24-3-99
CHD.	RS	R.Ganesh	24-3-99
APPD.	KNM	K.Neelam	24-3-99

DEPT. GTD CODE 423 | UNTOL. DIMS. GR. C/M/F | SCALE NTS | WEIGHT (KG) 0.32 | REF. TO ASSY. DRG. NA | ITEM NO. NA | NO.OF ITEMS NA

TITLE: BLADE, ROTOR-STG 17

CARD CODE NA | DRAWING NO. 0-353-05-61009 | REV. 00 | SHT. no 1 NO OF SHT. 1

REV.	DATE	ALTERED	CHD/APPD	ZONE

GENERAL DIMENSIONAL LIMITS,FITS & TOLERANCES AS PER HY0230261

THE INFORMATION ON THIS DOCUMENT IS THE PROPERTY OF BHARAT HEAVY ELECTRICALS LIMITED. IT MUST NOT BE USED DIRECTLY OR INDIRECTLY IN ANY WAY DETRIMENTAL TO THE INTEREST OF THE COMPANY.

INVENTORY NO | SIGN. AND DATE | REF. DRG. NO. 0-353-01 REV-- | COMPUTERIZED DRAWING 09/06/91 1.1E7

THIRD ANGLE PROJECTION

DRG. NO 0-353-05-61011 | SH. 1 OF 1

(ALL DIMENSIONS ARE IN mm)

NOTES:

1. FOR APPLICABLE DRAWING NOTES SEE ITEM 2.

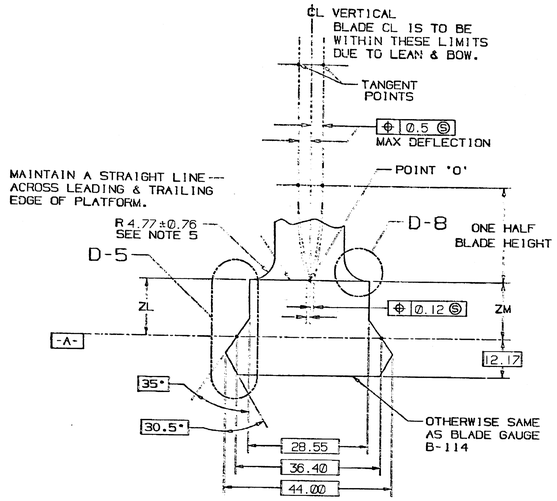

SECTIONS BA-BA, BB-BB & BC-BC (G-3)

SEE NOTE 6

SECTION	ZL ±0.25	ZM ±0.25
BA-BA	8.97	10.10
BB-BB	9.88	9.88
BC-BC	10.08	8.97

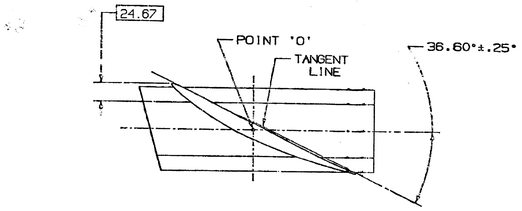

SECTION ZN-ZN (E-3)

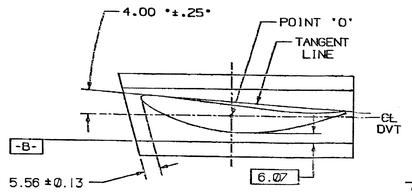

SECTION G-G (D-3)

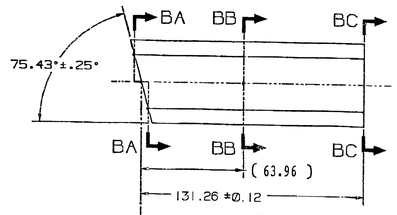

VIEW G-3 (F-3)
(AIRFOIL DELETED FOR CLARITY)

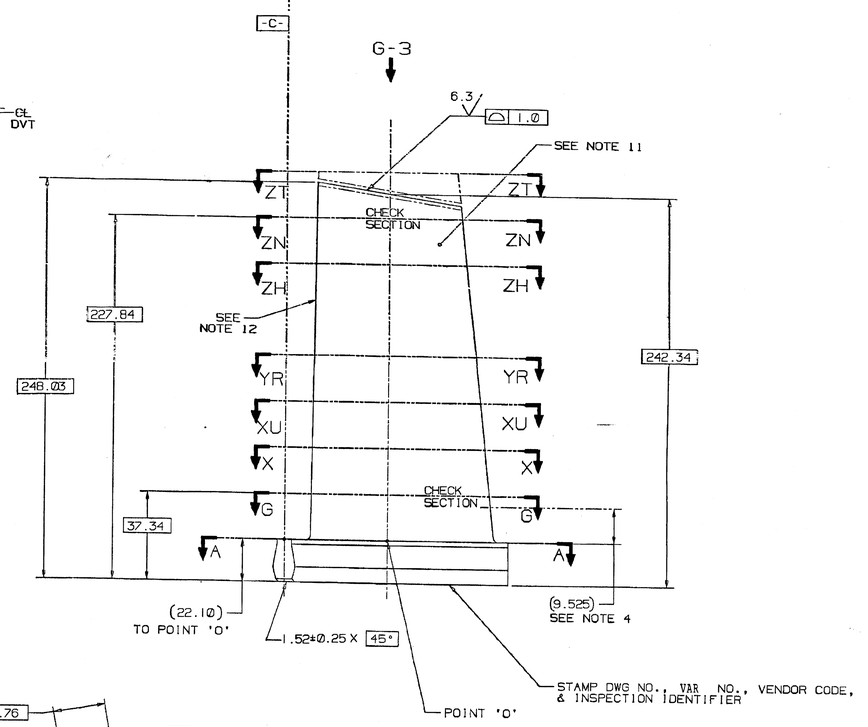

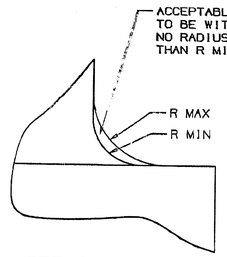

DETAIL D-8 (G-7)

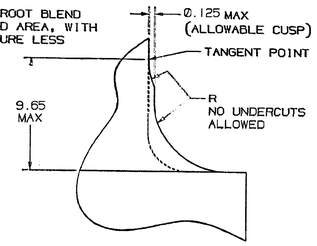

ALTERNATE METHOD OF MANUFACTURE
(REFER TO DETAIL D-8)

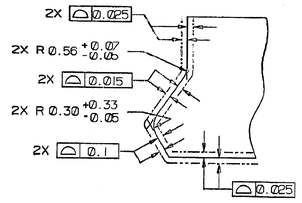

DETAIL D-5 (G-7)

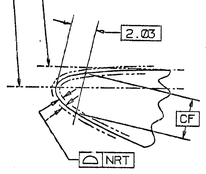

DETAIL B-8 (C-8)
(LEADING EDGE)

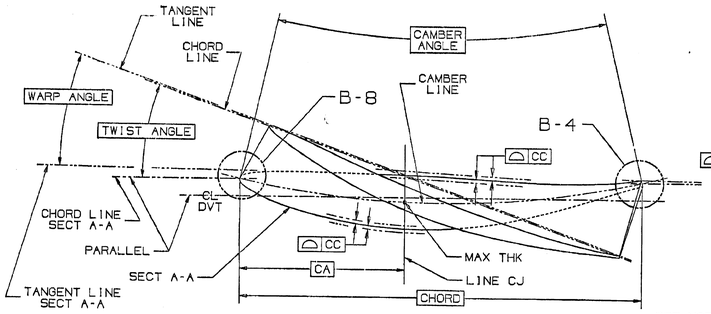

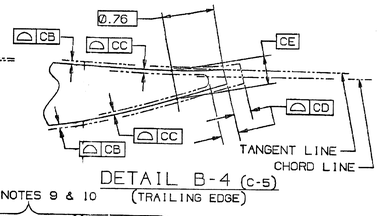

DETAIL B-4 (C-5)
(TRAILING EDGE)

SEE NOTES 9 & 10

SECTION	SECTION HEIGHT	CHORD	PERCENT THICKNESS	CAMBER ANGLE	TWIST ANGLE	WARP ANGLE	THICKNESS AT 'CA'	CA	CB	CC	CD	CE	CF	NRT
A-A	0.000	123.98	13.500	32.000	.000	N/A	16.736	61.989	0.142	0.282	1.240	2.238	2.835	0.119
G-G	15.24	123.98	12.800	29.800	4.000	N/A	15.870	61.989	0.135	0.267	1.240	2.113	2.685	0.111
X-X	50.80	123.98	11.150	24.700	12.500	N/A	13.823	61.989	0.114	0.231	1.240	1.829	2.334	0.094
XU-XU	101.60	123.98	8.800	18.200	22.500	N/A	10.910	61.989	0.091	0.180	1.240	1.435	1.829	0.076
YR-YR	152.40	123.98	6.450	13.000	30.300	N/A	7.996	61.989	0.066	0.132	1.240	1.046	1.336	0.076
ZH-ZH	193.04	123.98	4.600	9.600	35.300	N/A	5.702	61.989	0.046	0.094	1.240	0.744	0.950	0.076
ZN-ZN	205.74	123.98	4.000	8.700	36.600	N/A	4.933	61.989	0.041	0.081	1.240	0.648	0.826	0.076
ZT-ZT	215.90	123.98	3.550	8.000	37.400	N/A	4.402	61.989	0.036	0.071	1.240	0.574	0.734	0.076

-C-	F-4	1
-B-	F-8	1
-A-	F-8	1
DATUM	ZONE	SHEET

MATL HY10996 (C450)	01
DESCRIPTION	VAR

MATING PART REFERENCE DATA	
POINT 'O' Ø	833.92
RIM ANGLE	.000
DOVETAIL ANGLE	75.433

5	ACPT REOT-BLADES & VANES	P29A-A0800	GT10128
4	COMPR VANES-PROCESSING	P3C-A060	GT10083
3	X-Y COORDS (2169966)	324A5255	GT10361
2	APPLICABLE DWG NOTES	314A5112	GT10307
1	APPLIED PRACTICES	348A9200	HY230261
1T.	NOMENCLATURE	IDENT	SPECN

LIST OF COMPLEMENTARY DOCUMENTS

TYPE OF PRODUCT OR NAME OF CUSTOMER/PROJECT: GAS TURBINE FR-6

BHARAT HEAVY ELECTRICALS LIMITED
HYDERABAD

	NAME	SIGN.	DATE	NO. OF VAR.
DRN.	SCS		24-3-99	
CHD.	RS		24-3-99	NA
APPD.	KMM		24-3-99	

DEPT. GTD CODE 423	UNTOL. DIMS. CR C/M/F	SCALE NTS	WEIGHT (KG) 2.4	REF. TO ASSY. DRG. NA	ITEM NO. NA	NO. OF ITEMS NA

TITLE: BLADE ROTOR STG 1

CARD CODE NA | DRAWING NO. 0-353-05-61011 | REV. 00 | SHT. No. 1 | NO OF SHT. 1

REV.	DATE	ALTERED	CHD/APPD

ZONE

THE INFORMATION ON THIS DOCUMENT IS THE PROPERTY OF BHARAT HEAVY ELECTRICALS LIMITED. IT MUST NOT BE USED DIRECTLY OR INDIRECTLY IN ANY WAY DETRIMENTAL TO THE INTEREST OF THE COMPANY

GENERAL DIMENSIONAL LIMITS, FITS & TOLERANCES AS PER HY0230261

SIGN AND DATE | REF DRG. NO. 16PE5170 REV-- | CONVERTED AT HWE 03056111.STEP

INVENTOR NO

NOTES:

1. FOR APPLICABLE DRAWING NOTES SEE ITEM 2.

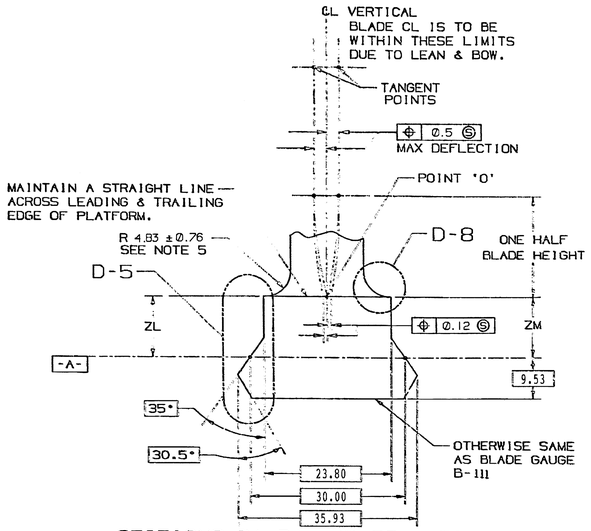

SECTIONS BA-BA, BB-BB & BC-BC (G-3)

SEE NOTE 6

SECTION	ZL ±0.25	ZM ±0.25
BA-BA	7.19	7.87
BB-BB	7.75	7.75
BC-BC	7.85	7.06

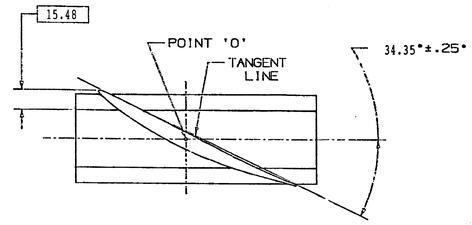

SECTION E-E (E-3)

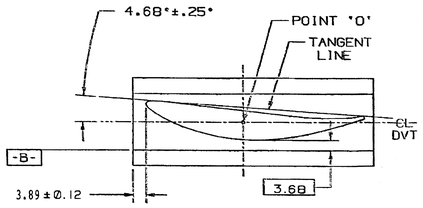

SECTION B-B (D-3)

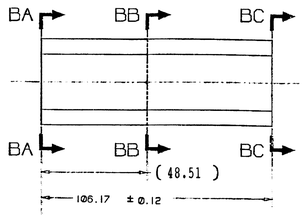

VIEW G-3 (F-3)
(AIRFOIL DELETED FOR CLARITY)

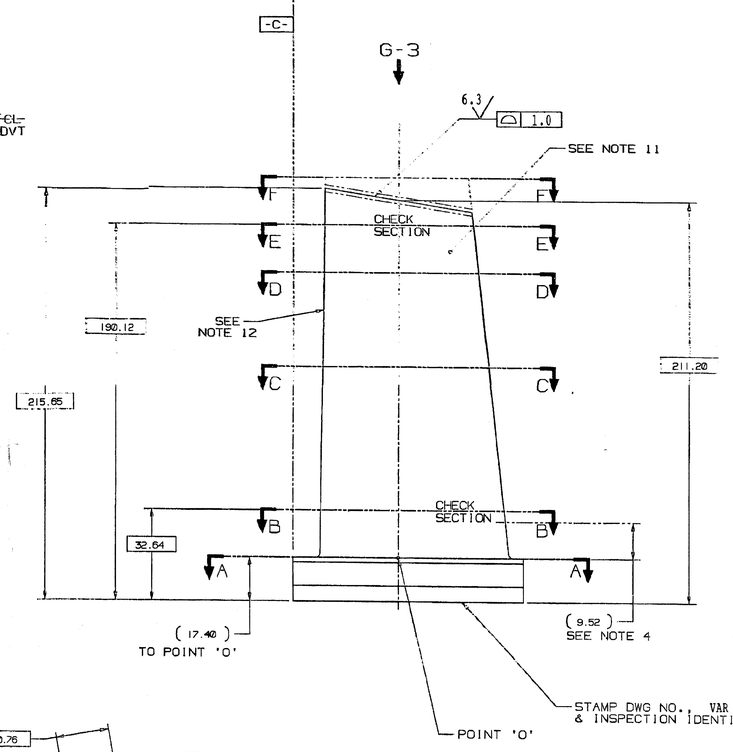

-C-	F-4	1
-B-	F-R	1
-A-	F-8	1
DATUM	ZONE	SHEET

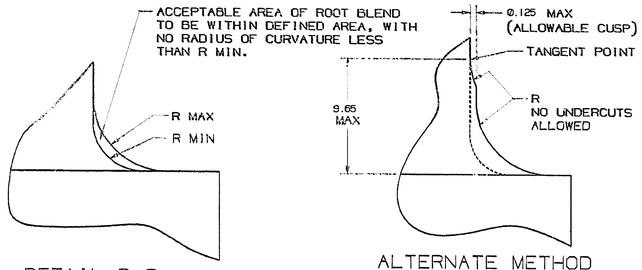

DETAIL D-8 (G-7)

ALTERNATE METHOD OF MANUFACTURE
(REFER TO DETAIL D-8)

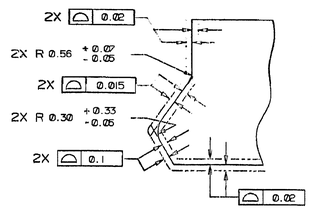

DETAIL D-5 (G-7)

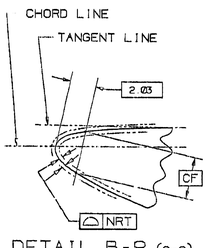

DETAIL B-8 (C-6)
(LEADING EDGE)

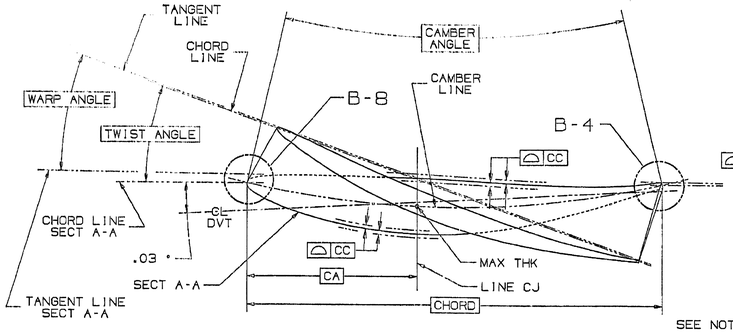

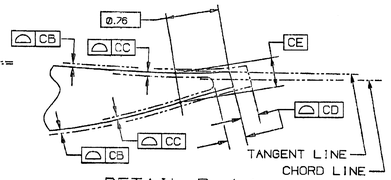

DETAIL B-4 (C-5)
(TRAILING EDGE)

SEE NOTES 9 & 10

SECTION	SECTION HEIGHT	CHORD	PERCENT THICKNESS	CAMBER ANGLE	TWIST ANGLE	WARP ANGLE	THICKNESS AT 'CA'	CA	CB	CC	CD	CE	CF	NRT
A-A	0.00	99.187	13.500	37.000	.000	.000	13.380	39.675	0.112	0.223	0.990	1.572	3.647	0.125
B-B	15.24	99.187	12.700	34.000	4.384	4.400	12.590	39.675	0.104	0.210	0.990	1.481	3.444	0.108
C-C	101.60	99.187	8.250	21.200	24.271	24.234	8.176	39.675	0.068	0.137	0.990	0.963	2.263	0.076
D-D	152.40	99.187	5.630	15.800	31.706	31.567	5.580	39.675	0.046	0.094	0.990	0.658	1.549	0.076
E-E	172.72	99.187	4.590	13.900	34.250	34.067	4.541	39.675	0.038	0.076	0.990	0.538	1.260	0.076
F-F	190.50	99.187	3.650	12.300	36.462	36.217	3.660	39.675	0.038	0.076	0.990	0.531	1.008	0.076

MATL HY10996 (C450)	01
DESCRIPTION	VAR

MATING PART REFERENCE DATA	
POINT 'O' Ø	833.93
RIM ANGLE	.000
DOVETAIL ANGLE	75.433

5	ACPT REQT-BLADES & VANES	P29A-AG900	GT10128
4	COMPR VANES-PROCESSING	P3C-AG60	GT10083
3	X-Y COORDS (217X369)	324A5244	GT10360
2	APPLICABLE DWG NOTES	314A5112	GT10507
1	APPLIED PRACTICES	348A9200	HY0230261
IT.	NOMENCLATURE	IDENT	SPECN
LIST OF COMPLEMENTARY DOCUMENTS			

THE INFORMATION ON THIS DOCUMENT IS THE PROPERTY OF BHARAT HEAVY ELECTRICALS LIMITED. IT MUST NOT BE USED DIRECTLY OR INDIRECTLY IN ANY WAY DETRIMENTAL TO THE INTEREST OF THE COMPANY

GENERAL DIMENSIONAL LIMITS, FITS & TOLERANCES AS PER HY0230261

COMPUTER FILE NAME 1095214.STP

REF. DRG. NO. 1095211 REF.-

SIGN. AND DATE

INVENTORY NO

TYPE OF PRODUCT OR NAME OF CUSTOMER/PROJECT: GAS TURBINE FR-6

BHARAT HEAVY ELECTRICALS LIMITED HYDERABAD

	NAME	SIGN.	DATE	NO. OF VAR.
DRN.	SCS		24-3-99	NA
CHD.	RS		24-3-99	
APPD.	RKM		24-3-99	

DEPT. GTD CODE 423 | UNTOL. DIMS. CR. C/M/F | SCALE NTS | WEIGHT (KG) 1.27 | REF. TO ASSY. DRG. NA | ITEM NO. NA | NO. OF ITEMS NA

TITLE: BLADE, ROTOR-STG 2

CARD CODE NA | DRAWING NO. 0-353-05-61012 | REV. 00 | SHT. No 1 | NO OF SHT. 1

REV.	DATE	ALTERED	CHD/APPD	ZONE

THIRD ANGLE PROJECTION

(ALL DIMENSIONS ARE IN mm)

DRG. NO. 0-353-05-61013 | SH. 1 OF 1

NOTES:

1. FOR APPLICABLE DRAWING NOTES SEE ITEM 2.

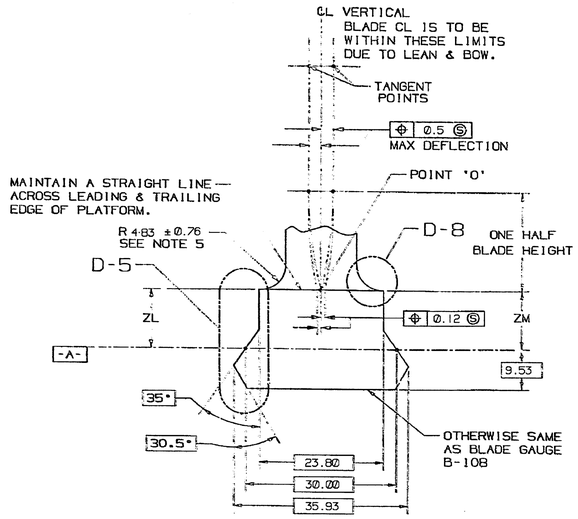

SECTIONS BA-BA, BB-BB & BC-BC (G-3)

SEE NOTE 6

SECTION	ZL ±0.25	ZM ±0.25
BA-BA	7.19	7.87
BB-BB	7.75	7.75
BC-BC	7.85	7.06

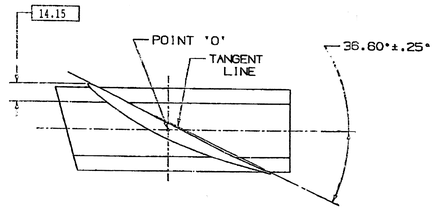

SECTION S-E (E-3)

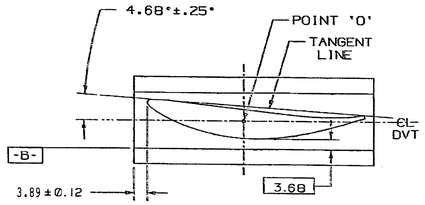

SECTION B-B (D-3)

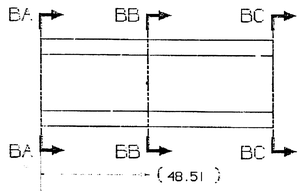

VIEW G-3 (F-3)
(AIRFOIL DELETED FOR CLARITY)

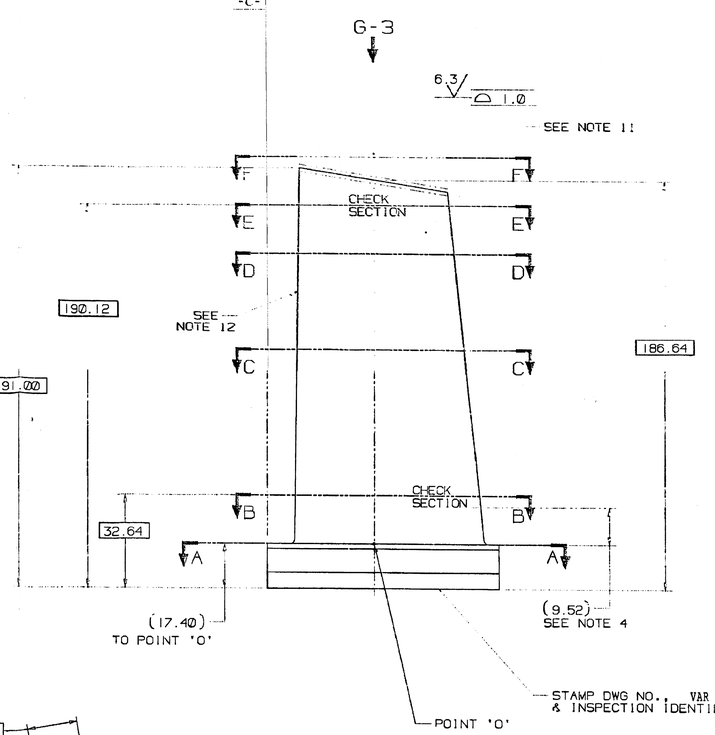

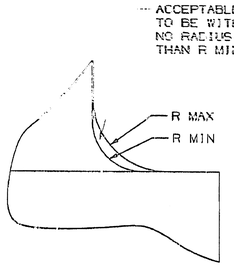

DETAIL D-8 (G-7)

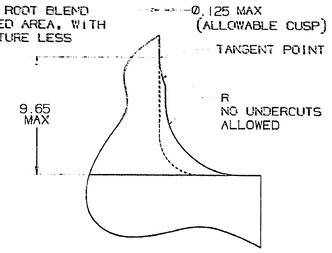

ALTERNATE METHOD OF MANUFACTURE
(REFER TO DETAIL D-8)

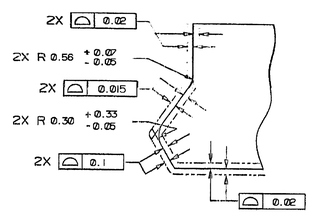

DETAIL D-5 (G-7)

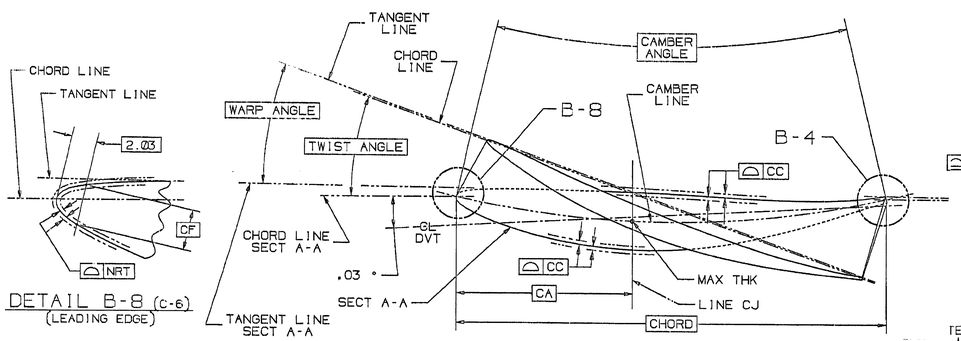

DETAIL B-8 (C-6)
(LEADING EDGE)

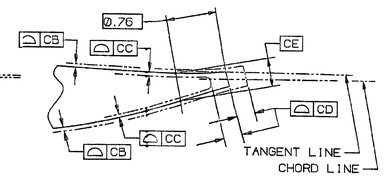

DETAIL B-4 (C-5)
(TRAILING EDGE)

SECTION	SECTION HEIGHT	CHORD	PERCENT THICKNESS	CAMBER ANGLE	TWIST ANGLE	WARP ANGLE	THICKNESS AT 'CA'	CA	CB	CC	CD	CE	CF	NRT
A-A	0.00	99.187	13.500	37.000	.000	.000	13.380	39.675	0.112	0.223	0.990	1.572	3.647	0.125
B-B	15.24	99.187	12.700	34.000	4.384	4.400	12.590	39.675	0.104	0.210	0.992	1.481	3.444	0.109
C-C	101.60	99.187	8.250	21.200	24.271	24.234	8.176	39.675	0.060	0.137	0.990	0.963	2.263	0.076
D-D	152.40	99.187	5.630	15.800	31.706	31.567	5.580	39.675	0.046	0.094	0.990	0.658	1.549	0.076
E-E	172.72	99.187	4.580	13.900	34.250	34.067	4.541	39.675	0.038	0.076	0.990	0.538	1.260	0.076
F-F	190.50	99.187	3.650	12.300	36.642	36.397	3.660	39.675	0.038	0.076	0.990	0.531	1.008	0.076

-C-	F-4	1
-B-	F-6	1
-A-	F-8	1
DATUM	ZONE	SHEET

MATL HY10996 (C450)OWSA VAR 01	-	10
COAT PER ITEM 7 OWSA VAR 01	P3	03
COAT PER ITEM 6 OWSA VAR 01	P2	02
MATL HY10988 (AISI 403 CD)	P1	01
DESCRIPTION	REF	VAR

MATING PART REFERENCE DATA	
POINT 'O' Ø	833.93
RIM ANGLE	.000
DOVETAIL ANGLE	75.433

7	COATING, ALUMINUM-INORGANIC	P16A-AG3	GT10125
6	COATING, ALUMINUM-INORGANIC	P16A-AG5	GT10606
5	ACPT REOT-BLADES & VANES	P29A-AG800	GT10128
4	COMPR VANES-PROCESSING	P3C-AG60	GT10783
3	X-Y COORDS (217X369)	324A5244	GT10560
2	APPLICABLE DWG NOTES	314A5112	GT10607
1	APPLIED PRACTICES	34BA9200	HY030261
IT.	NOMENCLATURE	IDENT	SPCEN
	LIST OF COMPLEMENTARY DOCUMENTS		

TYPE OF PRODUCT OR NAME OF CUSTOMER/PROJECT: GAS TURBINE FR-6

BHARAT HEAVY ELECTRICALS LIMITED
HYDERABAD

	NAME	SIGN.	DATE	NO. OF VAR.
DRN.	SCS		24-3-99	
CHD.	RS		24-3-99	NA
APPD.	KMM		24-3-99	

DEPT.	GTD	UNTO... DIMS.	SCALE	WEIGHT (KG)	REF. TO ASSY. DRG.	ITEM NO.	NO. OF ITEMS
CODE	423	GR. G/W/F	NTS	1.23	NA	NA	NA

TITLE: BLADE, ROTOR-STG 3

CARD CODE: NA | DRAWING NO. 0-353-05-61013 | REV. 00 | SHT. No 1 | NO OF SHT. 1

REV.	DATE	ALTERED	CHD/APPD

ZONE

THE INFORMATION ON THIS DOCUMENT IS THE PROPERTY OF BHARAT HEAVY ELECTRICALS LIMITED. IT MUST NOT BE USED DIRECTLY OR INDIRECTLY IN ANY WAY DETRIMENTAL TO THE INTEREST OF THE COMPANY

GENERAL DIMENSIONAL LIMITS, FITS & TOLERANCES AS PER HY030261

SIGN. AND DATE | REF. DRG. NO. 1198217 | COMPUTER FILE NAME 0353611.TIFF

INVENTORY NO

THIRD ANGLE PROJECTION

(ALL DIMENSIONS ARE IN mm)

DRG. NO. 0-353-05-91001 SH. 1 OF 1

DRAWING		PRECISION MASTER	
PT NO	REV	DWG NO	REV
1	—	217X239	—

NOTES:

1. FOR APPLICABLE DRAWING NOTES SEE ITEM 2.

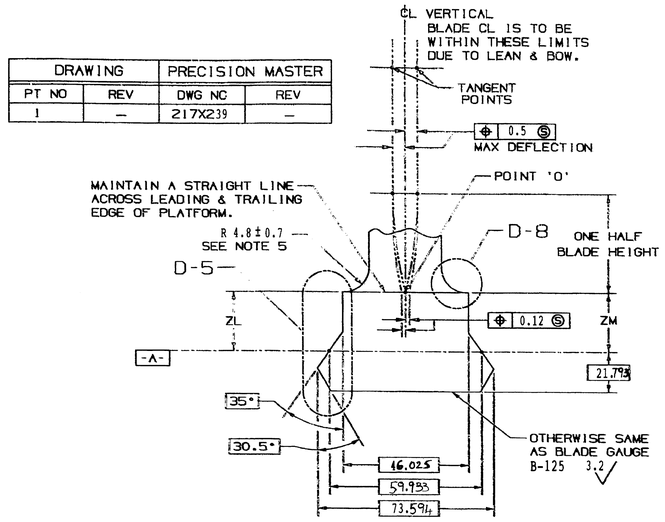

SECTIONS BA-BA, BB-BB & BC-BC (G-3)

SEE NOTE 6

SECTION	ZL ± 0.2	ZM ± 0.2
BA-BA	15.6	17.4
BB-BB	17.1	17.1
BC-BC	17.4	15.6

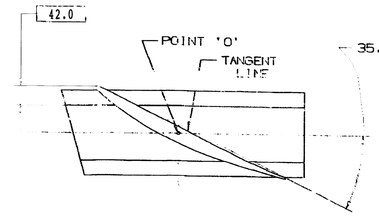

SECTION F-F (E-3)

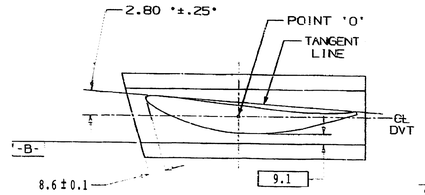

SECTION B-B (D-3)

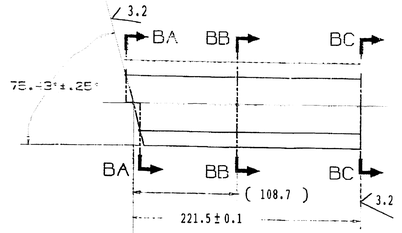

VIEW G-3 (F-3)
(AIRFOIL DELETED FOR CLARITY)

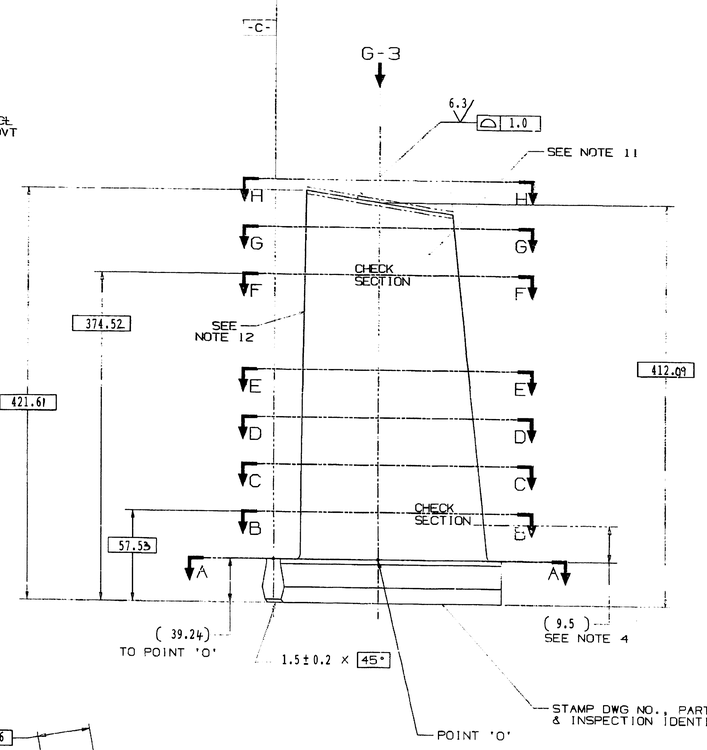

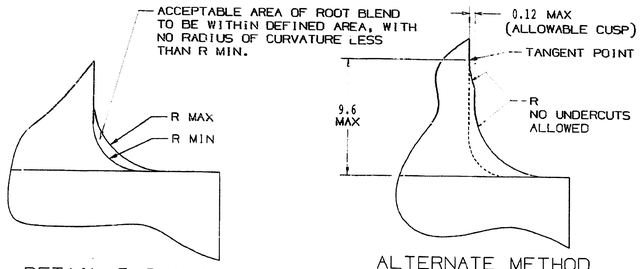

DETAIL D-8 (G-7)

ALTERNATE METHOD OF MANUFACTURE
(REFER TO DETAIL D-8)

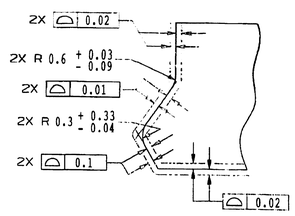

DETAIL D-5 (G-7)

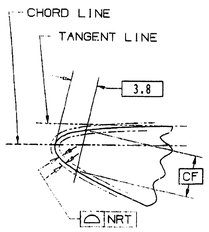

DETAIL B-8 (C-6)
(LEADING EDGE)

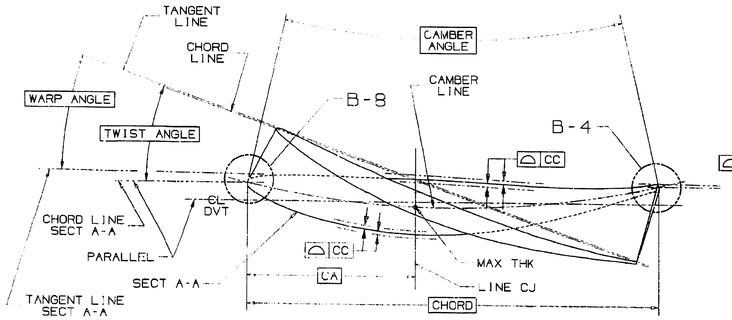

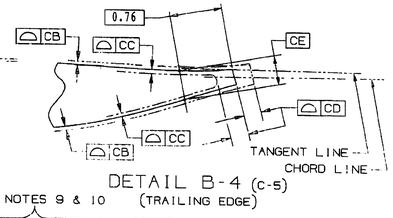

DETAIL B-4 (C-5)
(TRAILING EDGE)

SEE NOTES 9 & 10

SECTION	SECTION HEIGHT	CHORD	PERCENT THICKNESS	CAMBER ANGLE	TWIST ANGLE	WARP ANGLE	THICKNESS AT 'CA'	CA	CB	CC	CD	CE	CF	NRT
A-A	000.0	210.74	13.500	32.000	.000	N/A	28.45	105.372	0.24	0.48	1.05	3.56	4.98	0.20
B-B	018.28	210.74	13.004	30.450	2.800	N/A	27.40	105.372	0.23	0.46	1.05	3.41	4.8	0.19
C-C	091.44	210.74	11.021	24.350	13.000	N/A	23.23	105.372	0.19	0.39	1.05	2.87	4.05	0.15
D-D	182.88	210.74	8.543	17.500	23.500	N/A	18.00	105.372	0.14	0.30	1.05	2.21	3.12	0.11
E-E	274.32	210.74	6.064	12.200	31.500	N/A	12.78	105.372	0.10	0.21	1.05	1.56	2.21	0.07
F-F	335.28	210.74	4.411	9.350	35.600	N/A	09.30	105.372	0.076	0.15	1.05	1.13	1.6	0.07
G-G	365.76	210.74	3.585	8.000	37.300	N/A	07.55	105.372	0.06	0.12	1.05	0.92	1.3	0.07
H-H	384.05	210.74	3.100	7.217	38.200	N/A	06.53	105.372	0.05	0.11	1.05	0.80	1.13	0.07

MATING PART REFERENCE DATA	
POINT 'O' Ø	1417.68
RIM ANGLE	.000
DOVETAIL ANGLE	75.433

5	ACPT REOT-BLADES & VANES	P29A-A9900	GT10128
4	COMPR VANES-PROCESSING	P3C-A660	GT10083
3	X-Y COORDS	287A7859	GT10653
2	APPLICABLE DWG NOTES	314A5112	GT10459
1	APPLIED PRACTICES	34BA9200	HY230261
IT.	NOMENCLATURE	IDENT	BHEL SPEC
LIST OF COMPLEMENTARY DOCUMENTS			

THE INFORMATION ON THIS DOCUMENT IS THE PROPERTY OF BHARAT HEAVY ELECTRICALS LIMITED. IT MUST NOT BE USED DIRECTLY OR INDIRECTLY IN ANY WAY DETRIMENTAL TO THE INTEREST OF THE COMPANY

GENERAL DIMENSIONAL LIMITS,FITS & TOLERANCES AS PER HY230261

SIGN. AND DATE | REF. DWG. NO. 10995123 REV 'A' | COMPUTER FILE NAME 0353995101-050-089.prt

INVENTORY NO

REV.	DATE	ALTERED CHD/APPD
ZONE		

TYPE OF PRODUCT OR NAME OF CUSTOMER/PROJECT

BHARAT HEAVY ELECTRICALS LIMITED
HYDERABAD

	NAME	SIGN.	DATE	NO.OF VAR.
DRN.	SCS		4.1.2000	NA
CHD.	SKR		4.1.2000	
APPD.	SSR		4.1.2000	

DEPT.	UNTOL. DIMS. OR	SCALE	WEIGHT (KG)	REF. TO ASSY. DRG.	ITEM NO.	NO.OF ITEMS
STG CODE 423		NA	11.82	NA	NA	NA

TITLE: BLADE ROTOR STG 1

CARD CODE

DRAWING NO. 0-353-05-91001 REV. 00

SHT. no 1 NO OF SHT. 1

THIRD ANGLE PROJECTION

(ALL DIMENSIONS ARE IN mm)

DRG. NO. 0-353-05-91002 SH. 1 OF 1

DRAWING		PRECISION MASTER	
PT NO	REV	DWG NO	REV
1	—	217X240	—

NOTES:

1. FOR APPLICABLE DRAWING NOTES SEE ITEM 2.

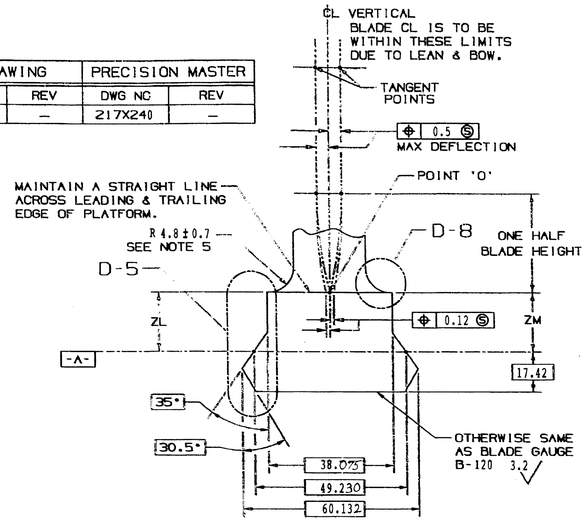

SECTIONS BA-BA, BB-BB & BC-BC (G-3)

SEE NOTE 6

SECTION	ZL ± 0.2	ZM ± 0.2
BA-BA	15.8	16.8
BB-BB	16.6	16.6
BC-BC	16.8	15.5

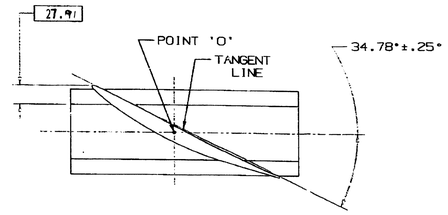

SECTION G-G (E-3)

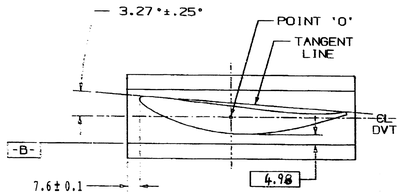

SECTION B-B (D-3)

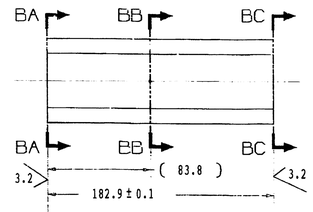

VIEW G-3 (F-3)
(AIRFOIL DELETED FOR CLARITY)

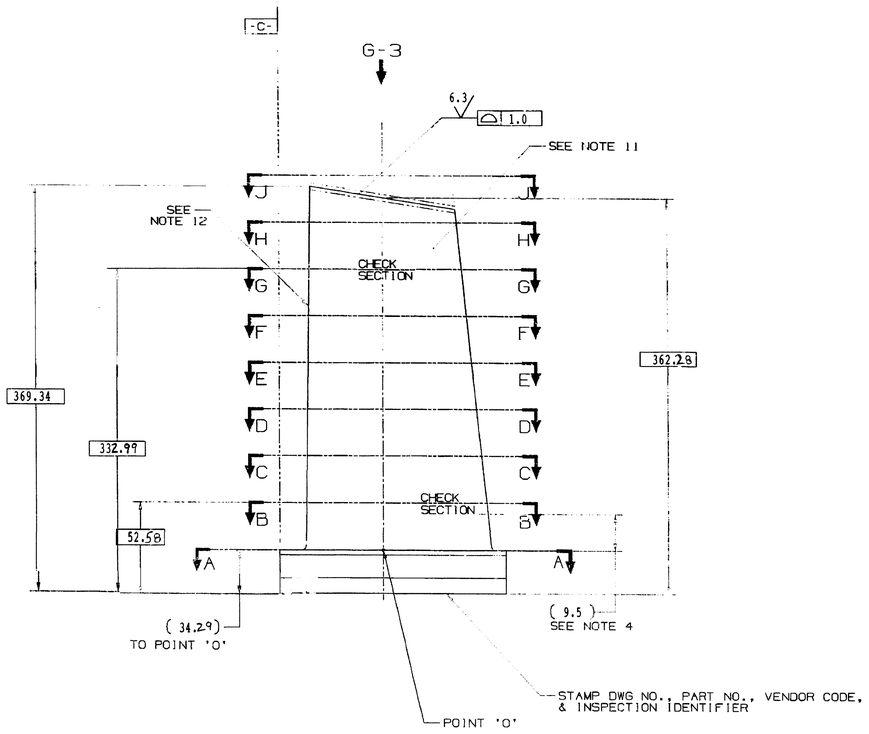

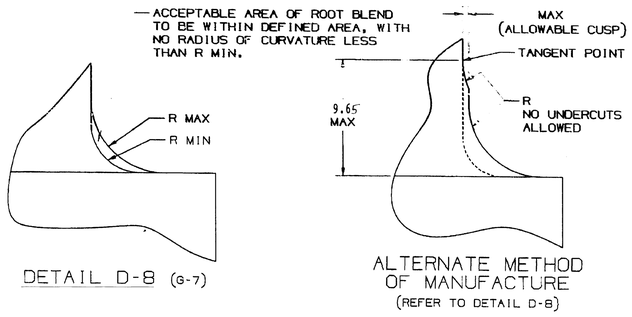

DETAIL D-8 (G-7)

ALTERNATE METHOD OF MANUFACTURE
(REFER TO DETAIL D-8)

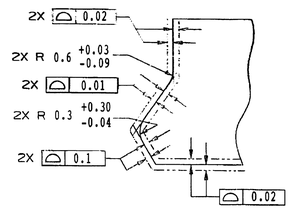

DETAIL D-5 (G-7)

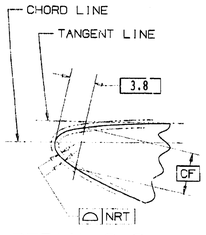

DETAIL B-8 (C-6)
(LEADING EDGE)

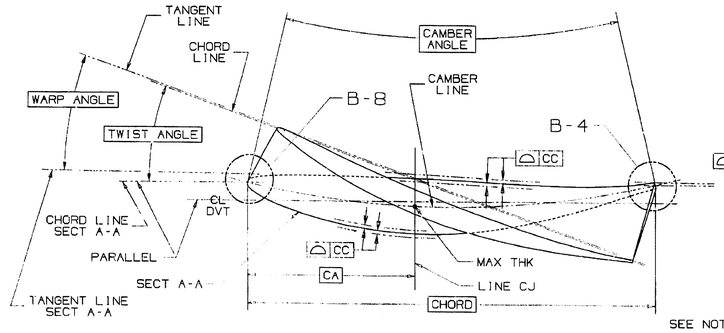

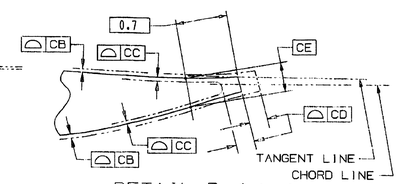

DETAIL B-4 (C-5)
(TRAILING EDGE)

SEE NOTES 9 & 10

SECTION	SECTION HEIGHT	CHORD	PERCENT THICKNESS	CAMBER ANGLE	TWIST ANGLE	WARP ANGLE	THICKNESS AT 'CA'	CA	CB	CC	CD	CE	CF	NRT
A-A	00.00	168.63	13.500	37.000	.000	.000	22.75	67.452	0.19	0.38	1.69	2.61	6.469	0.21
B-B	18.29	168.63	12.945	35.000	3.000	3.009	21.81	67.452	0.18	0.36	1.69	2.51	6.218	0.19
C-C	073.15	168.63	11.279	28.500	11.800	11.815	19.00	67.452	0.16	0.32	1.69	2.19	5.48	0.13
D-D	128.02	168.63	9.613	24.500	19.100	19.100	16.20	67.452	0.13	0.27	1.69	1.86	4.663	0.1
E-E	182.96	168.63	7.947	20.300	25.000	24.959	13.39	67.452	0.11	0.22	1.69	1.54	3.866	0.07
F-F	262.13	168.63	5.541	15.600	32.100	31.958	09.34	67.452	0.08	0.15	1.69	1.07	2.703	0.07
G-G	298.70	168.63	4.430	13.800	34.700	34.510	7.47	67.452	0.06	0.12	1.69	0.86	2.164	0.07
H-H	323.09	168.63	3.690	12.700	36.300	36.083	6.22	67.452	0.05	0.10	1.69	0.72	1.803	0.07
J-J	338.33	168.63	3.250	12.000	37.283	37.050	5.48	67.452	0.046	0.09	1.69	0.63	1.588	0.07

MATING PART REFERENCE DATA	
POINT 'O' Ø	1417.68
RIM ANGLE	.000
DOVETAIL ANGLE	75.433

5	ACPT REOT-BLADES & VANES	P29A-AG900	GT10128
4	COMPR VANES-PROCESSING	P3C-AG80	GT10083
3	X-Y COORDS	287A7860	GT10656
2	APPLICABLE DWG NOTES	314A5112	GT10459
1	APPLIED PRACTICES	348A9200	HY230261
IT.	NOMENCLATURE	IDENT	BREL SPEC
LIST OF COMPLEMENTARY DOCUMENTS			

TYPE OF PRODUCT OR NAME OF CUSTOMER/PROJECT: FRAME - 9

	NAME	SIGN.	DATE	NO. OF VAR.
DRN.	SCS		4.1.2000	NA
CHD.	SKR		4.1.2000	
APPD.	SSR		4.1.2000	

DEPT. CODE	UNTOL. DIMS.	SCALE	WEIGHT (KG)	REF. TO ASSY. DRG.	ITEM NO.	NO. OF ITEMS
423	±1/4	NA	6.6	NA	NA	NA

TITLE: BLADE ROTOR STG 2

DRAWING NO. 0-353-05-91002 REV. 00 SHT. No 1 OF 1

CARD CODE

REV.	DATE	ALTERED	CHD/APPD	ZONE

THE INFORMATION ON THIS DOCUMEN NOT BE USED DIRECTLY OR INDIRECT

GENERAL DIMENSIONAL LIMITS,FITS & TOLERANCES AS PER HY023O261

COMPUTER FILE NAME 0353091002-SH01.DWG

REF. DRG. NO. 1195E124 REV'A'

SIGN. AND DATE

INVENTORY NO

MUST

THIRD ANGLE PROJECTION

(ALL DIMENSIONS ARE IN mm)

DRG. NO. 0-353-05-91004 SH. 1 OF 1

DRAWING		PRECISION MASTER	
PT NO	REV	DWG NO	REV
1-3	—	217X241	—

NOTES:

1. FOR APPLICABLE DRAWING NOTES SEE ITEM 2.

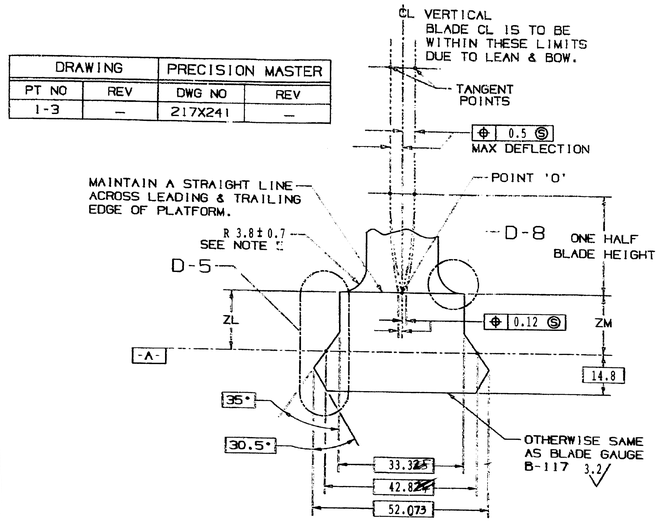

SECTIONS BA-BA, BB-BB & BC-BC (G-3)

SEE NOTE 6

SECTION	ZL ± 0.2	ZM ± 0.2
BA-BA	10.90	11.6
BB-BB	11.4	11.4
BC-BC	11.6	10.77

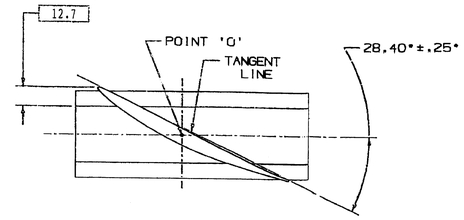

SECTION F-F (E-3)

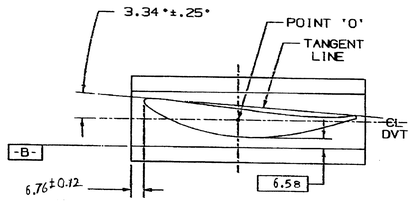

SECTION B-B (D-3)

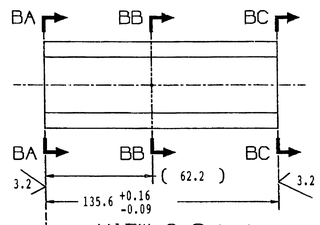

VIEW G-3 (F-3)
(AIRFOIL DELETED FOR CLARITY)

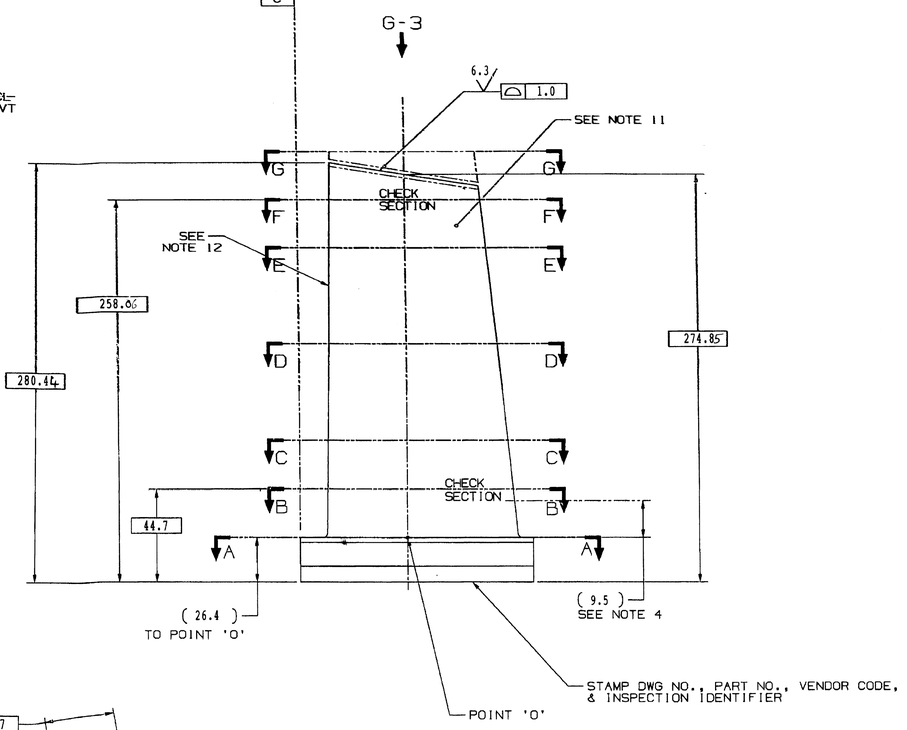

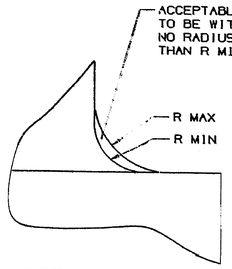

DETAIL D-8 (G-7)

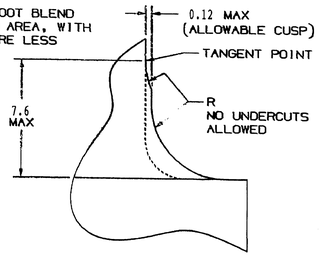

ALTERNATE METHOD OF MANUFACTURE
(REFER TO DETAIL D-8)

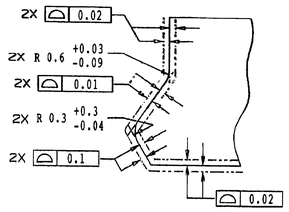

DETAIL D-5 (G-7)

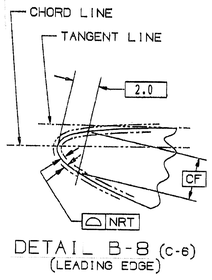

DETAIL B-8 (C-6)
(LEADING EDGE)

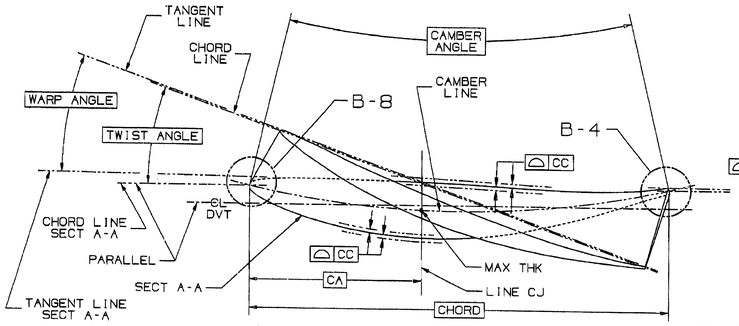

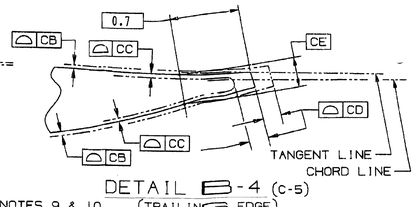

DETAIL B-4 (C-5)
(TRAILING EDGE)

SEE NOTES 9 & 10

SECTION	SECTION HEIGHT	CHORD	PERCENT THICKNESS	CAMBER ANGLE	TWIST ANGLE	WARP ANGLE	THICKNESS AT 'CA'	CA	CB	CC	CD	CE	CF	NRT
A-A	00.00	122.63	13.500	36.000	.000	.000	16.543	49.052	0.14	0.28	1.23	1 — 93	4.117	0.15
B-B	18.29	122.63	12.943	32.700	3.000	3.046	15.86	49.052	0.13	0.26	1.23	1 — 85	3.962	0.14
C-C	73.15	122.63	11.271	27.500	11.800	11.841	13.813	49.052	0.11	0.23	1.23	1 — 61	3.47	0.11
D-D	128.02	122.63	9.600	22.600	18.667	18.701	11.763	49.052	0.1	0.2	1.23	1 — 37	2.967	0.08
E-E	182.90	122.63	7.928	18.700	24.200	24.181	9.716	49.052	0.08	0.16	1.23	1 — 13	2.456	0.076
F-F	231.65	122.63	6.442	15.900	28.200	28.105	7.894	49.052	0.066	0.13	1.23	0 — 92	2.0	0.076
G-G	256.03	122.63	5.699	14.800	29.800	29.663	6.982	49.052	0.06	0.12	1.23	0 — 82	1.77	0.076

MATING PART REFERENCE DATA	
POINT 'O' Ø	1417.62
RIM ANGLE	.000
DOVETAIL ANGLE	75.067

7	COATING, ALUMINUM-INORGANIC	P18A-A93	GT10125
6	COATING, ALUMINUM-INORGANIC	P18A-A95	GT10606
5	ACPT REQT-BLADES & VANES	P29A-A9900	GT10128
4	COMPR VANES-PROCESSING	P3C-A960	GT10083
3	X-Y COORDS	287A7861	GTI06564
2	APPLICABLE DWG NOTES	314A5112	GT10459
1	APPLIED PRACTICES	348A9200	HY230261
IT.	NOMENCLATURE	IDENT	BHEL SPEC

LIST OF COMPLEMENTARY DOCUMENTS

THE INFORMATION ON THIS DOCUMENT IS THE PROPERTY OF BHARAT HEAVY ELECTRICALS LIMITED. IT MUST NOT BE USED DIRECTLY OR INDIRECTLY IN ANY WAY DETRIMENTAL TO THE INTEREST OF THE COMPANY

GENERAL DIMENSIONAL LIMITS,FITS & TOLERANCES AS PER HY0230261

SIGN. AND DATE | REF. DWG. NO. 109B5126 REV A | COMPUTER FILE NAME: 1353051004-0353091.DT

INVENTORY NO

REV.	DATE	ALTERED	CHD/APPD

TYPE OF PRODUCT OR NAME OF CUSTOMER/PROJECT

BHARAT HEAVY ELECTRICALS LIMITED
HYDERABAD

	NAME	SIGN.	DATE	NO. OF VAR.
DRN.	SCS		4.1.2000	NA
CHD.	SKR		4.1.2000	
APPD.	SSR		4.1.2000	

DEPT. CTD CODE	UNTOL. DIMS. CR.	SCALE	WEIGHT (KG)	REF. TO ASSY. DRG.	ITEM NO.	NO. OF ITEMS
423	NIL	NA	3.1	NA	NA	NA

TITLE: BLADE ROTOR STG 4

CARD CODE | DRAWING NO. 0-353-05-91004 | REV. 00

SHT. No 1 OF SHT. 1

FIRST ANGLE PROJECTION

(ALL DIMENSIONS ARE IN mm)

DRG. NO. 1-301-79-00003 SH. 01 OF 01

POS : 1

SECTION B-B

EXECUTION: 02 "R"

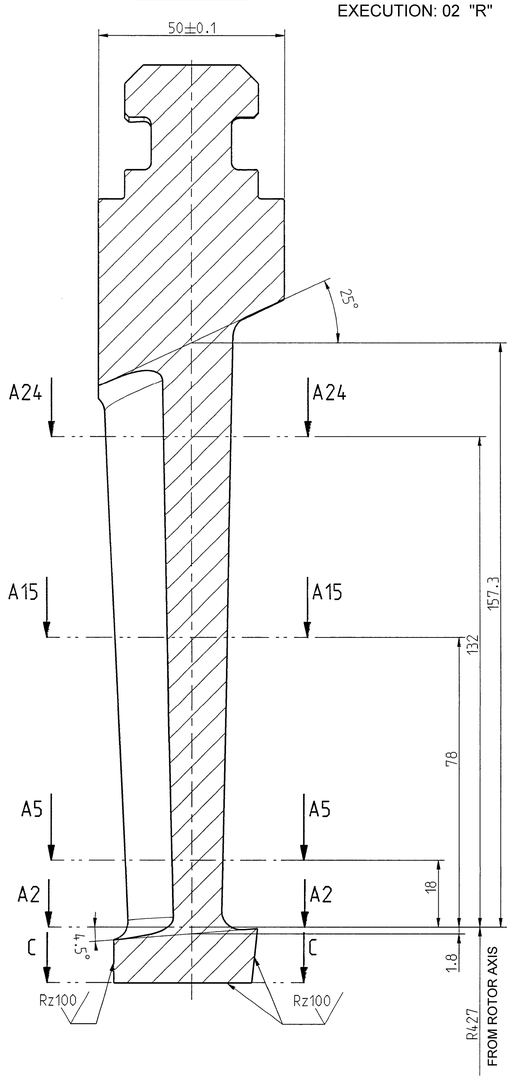

ALL DIMENSIONS REFERED ON R659

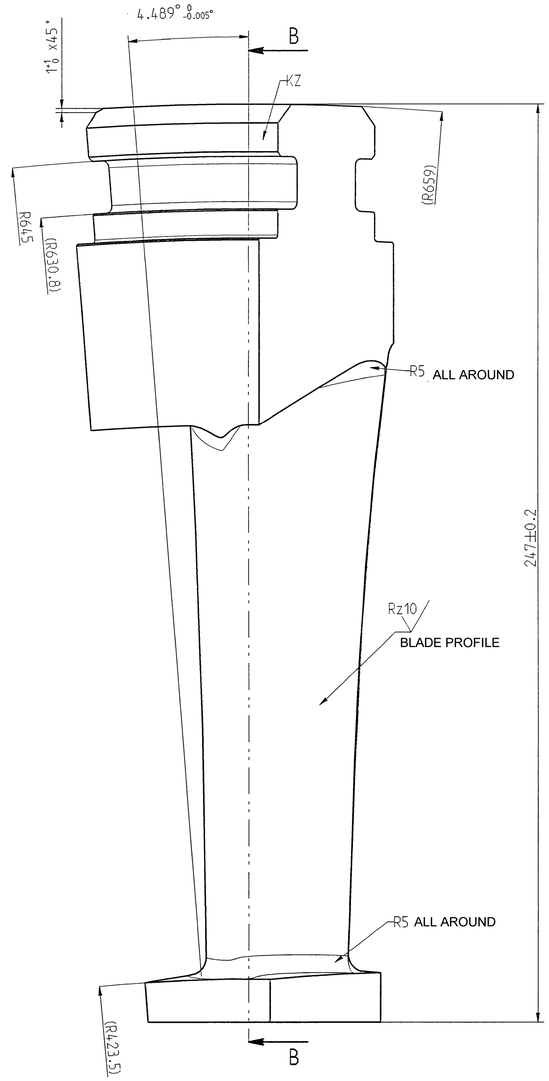

SCHEME OF DIMENSIONS

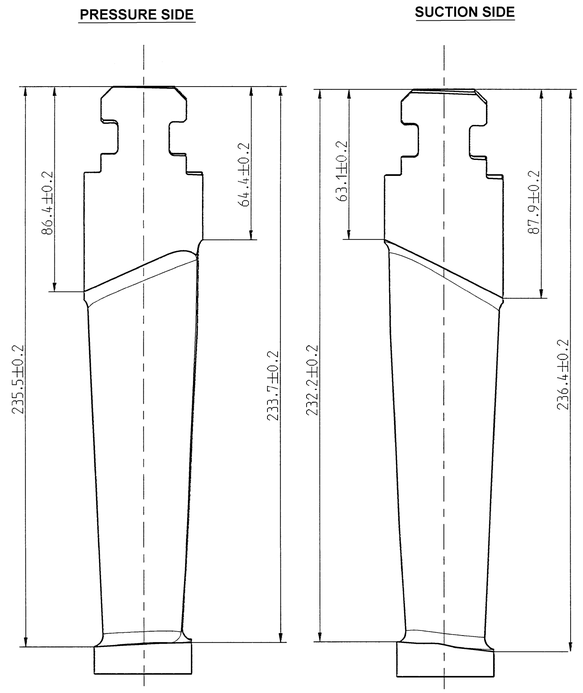

SECTION A2-A2

ALL DIMENSIONS REFERED ON R427

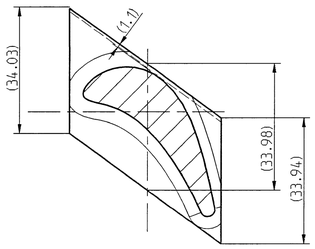

Rz16 = 0.8 (Rz10 = 0.8 Rz100 = 12.5)

EXECUTION: 00 "L" EXECUTION: 02 "R"

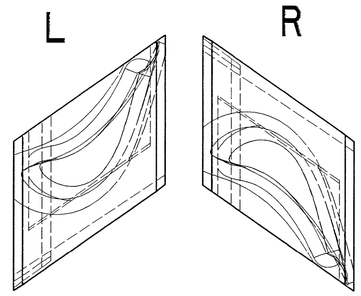

POS : 2

GUIDE BLADES AT JOINT PLANE(2PCS)
MADE BY REWORKING ON NORMAL GIUDE BLADE

EXECUTION: 01 "L" EXECUTION: 03 "R"

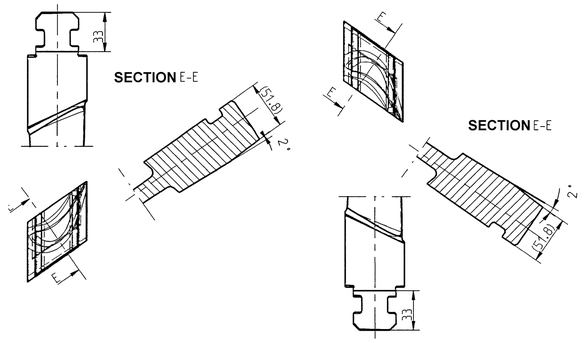

Rz25 = 1.6 (Rz16 = 0.8)

BLADE ROOT DETAIL

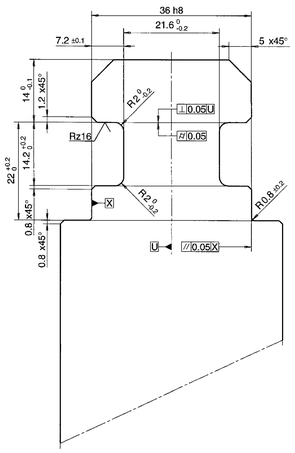

ALL DIMENSIONS REFERED ON R659

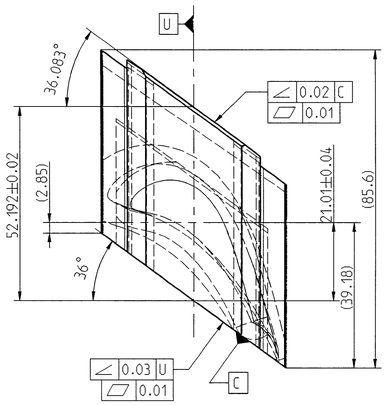

SECTION C-C

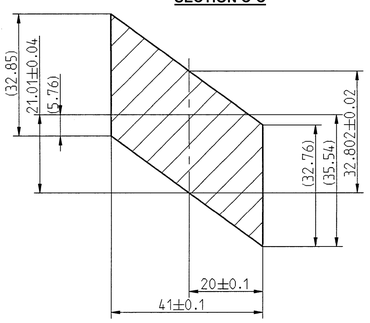

PROFILE TOLERANCES FOR THE PROFILE SECTION A5, A15, A24.

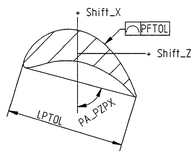

PFTOL	0.20
Shift_X	+0.40 -0.20
Shift_Z	+0.40 -0.20
PA_PZPX	±0.20°
LPTOL	+0.20 -0.40

EY VALUE FOR 250mm SINE BAR LENGTH	
FOR LEFT VAR 00 & 01	FOR RIGHT VAR 02 & 03
EX=5.8248	EX=5.833
EY=16.0434	EY=16.0434

NOTES:

1. Profile co-ordinates as per drawing No: 0-301-79-00001-00
2. Profile checking sections: A5, A15, A24.
3. Final Machining as per Blading Plan.
4. Total No. of Blade = 80.

Flat 95X70 X20Cr13V HY10764	2	03	03
	78	02	02
	2	01	01
	78	00	00
Description	No. of Blades	Execution	Var

TYPE OF PRODUCT OR

NAME OF CUSTOMER/PROJECT

BHARAT HEAVY ELECTRICALS LIMITED
HYDERABAD

	NAME	SIGN	DATE	NO OF VAR
DRN	HARISH		14.05.06	NA
CHD	TS PRABHAKAR		14.05.06	
APPD	CNV RAMANA		14.05.06	

DEPT	UNTOL DIMS	SCALE	WEIGHT (KG)	REF TO ASSY DRG	ITEM NO	NO OF ITEMS
ITD CODE 415	GR ¢/M/F	NTS	1.87	NA	NA	NA

TITLE **LP GUIDE BLADE-1 (SL 2.2 SQM)**

CARD CODE

DRAWING NO. **1-301-79-00003** REV 00

SHT No 01 NO OF SHT 01

THE INFORMATION ON THIS DOCUMENT IS THE PROPERTY OF BHARAT HEAVY ELECTRICALS LIMITED. IT MUST NOT BE USED DIRECTLY OR INDIRECTLY IN ANY WAY DETRIMENTAL TO THE INTEREST OF THE COMPANY

GENERAL DIMENSIONAL LIMITS, FITS & TOLERANCES AS PER HY0230261

INVENTORY NO | SIGN AND DATE | REF | DRG NO 0-2118-2201-10 | COMPUTER FILE NAME

FIRST ANGLE PROJECTION

(ALL DIMENSIONS ARE IN mm)

DRG. NO. 1-301-81-00001 SH. 01 OF 01

SECTION B-B

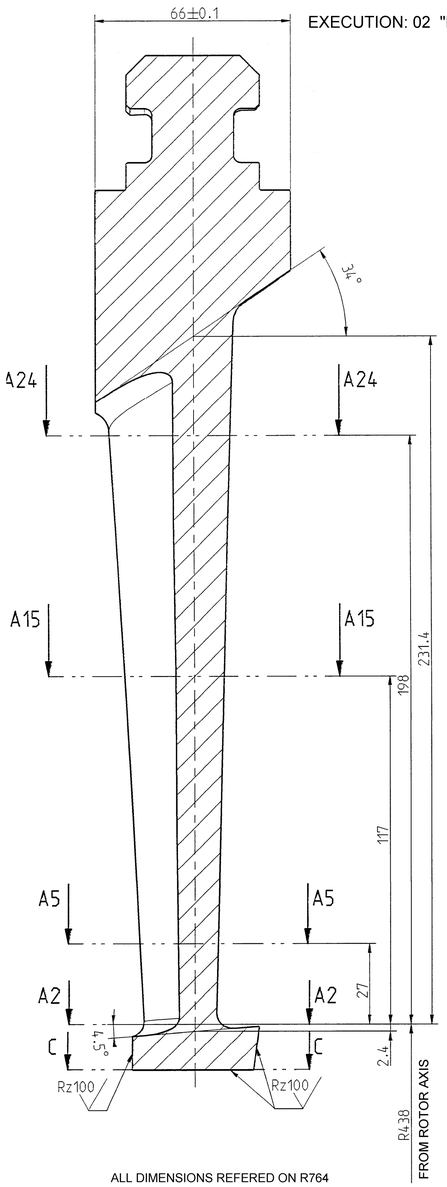

POS : 1

EXECUTION: 02 "R"

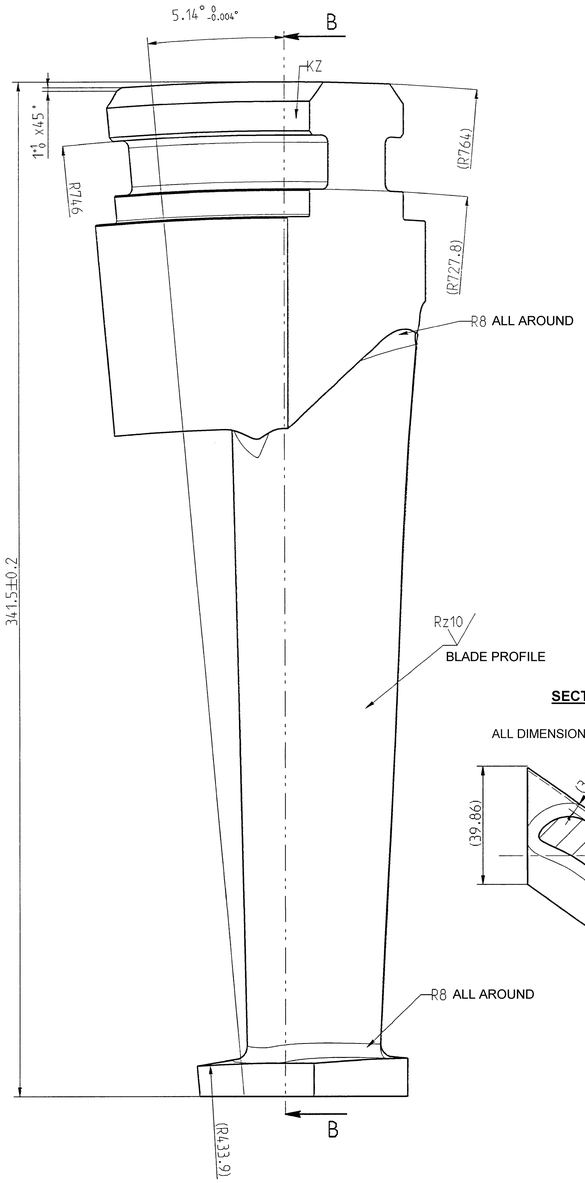

SCHEME OF DIMENSIONS

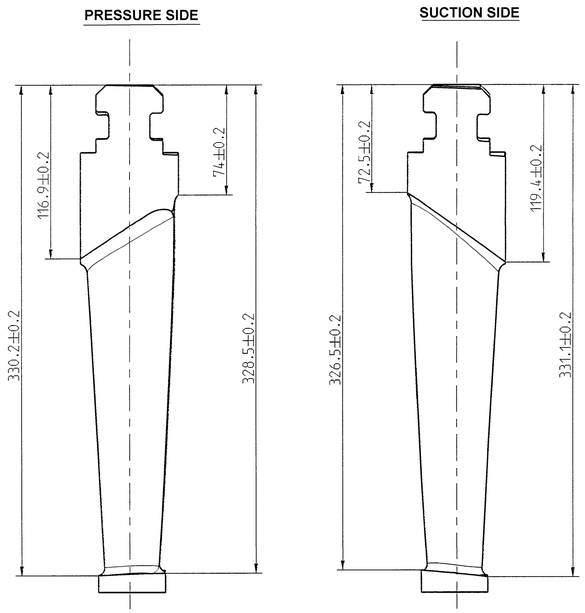

Rz16 = 0.8 (Rz10 = 0.8 Rz100 = 12.5)

L — EXECUTION: 00 "L" — LEFT

R — EXECUTION: 02 "R" — RIGHT

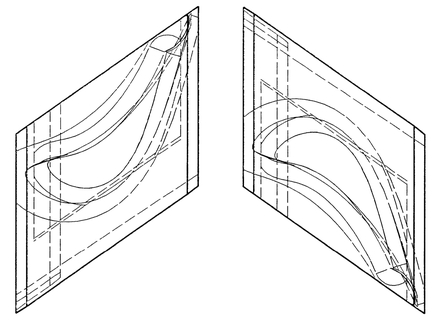

POS : 2

GUIDE BLADES AT JOINT PLANE(2PCS)
MADE BY REWORKING ON NORMAL GIUDE BLADE

EXECUTION: 01 "L"

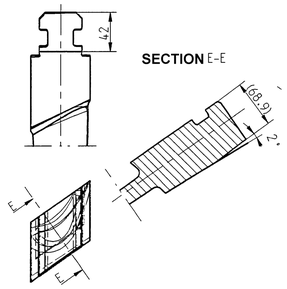

EXECUTION: 03 "R"

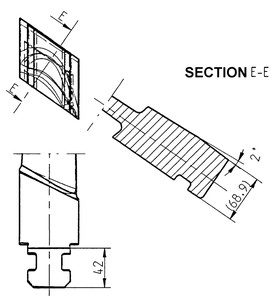

SECTION A2-A2

ALL DIMENSIONS REFERED ON R438

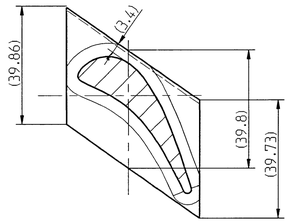

EY VALUE FOR 250mm SINE BAR LENGTH	
FOR LEFT VAR 00 & 01	FOR RIGHT VAR 02 & 03
EX= 6.4890	EX= 6.4985
EY=18.5403	EY= 18.5403

BLADE ROOT DETAIL

√Rz25 = 1.6 (√Rz16 = 0.8)

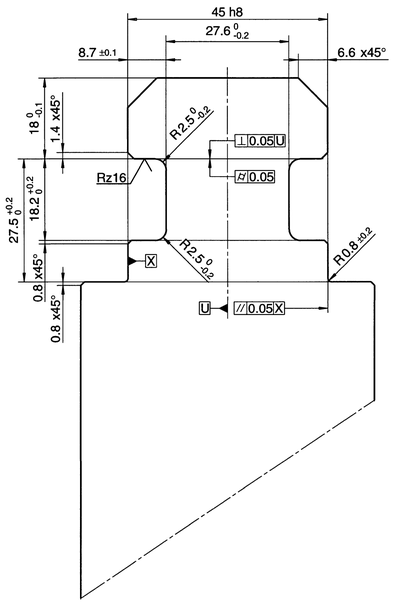

NOTES:

1. Profile co-ordinates as per drawing No: 0-301-81-00001-00
2. Profile checking sections: A5, A15, A24.
3. Final Machining as per Blading Plan.
4. Total No. of Blade = 70.

ALL DIMENSIONS REFERED ON R764

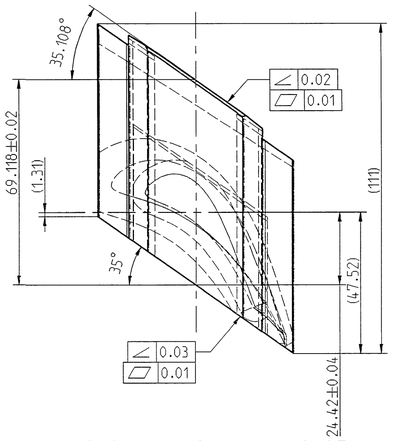

SECTION C-C

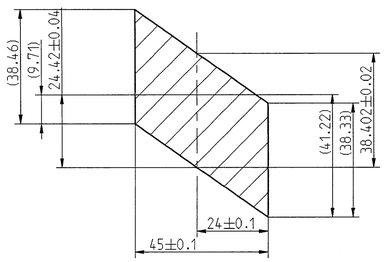

PROFILE TOLERANCES FOR THE PROFILE SECTION A5, A15, A24.

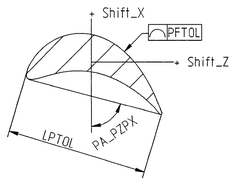

PFTOL	0.25
Shift_X	+0.50 -0.25
Shift_Z	+0.50 -0.25
PA_PZPX	±0.25°
LPTOL	+0.25 -0.50

FLAT 125X80 X20Cr13V HY10764	2	03	03
	68	02	02
	2	01	01
	68	00	00
Description	No. of Blades	Execution	Var

TYPE OF PRODUCT OR

NAME OF CUSTOMER/PROJECT

BHARAT HEAVY ELECTRICALS LIMITED
HYDERABAD

	NAME	SIGN	DATE	NO OF VAR
DRN	HARISH		14.05.06	NA
CHD	TS PRABHAKAR		14.05.06	
APPD	CNV RAMANA		14.05.06	

DEPT ITD CODE 415	UNTOL DIMS OR ¢/M/f	SCALE NTS	WEIGHT (KG) 3.7	REF TO ASSY DRG NA	ITEM NO NA	NO OF ITEMS NA

TITLE LP GUIDE BLADE-2 (SL 2.2 SQM)

CARD CODE

DRAWING NO. 1-301-81-00001 REV 00

SHT No 01 NO OF SHT 01

THE INFORMATION ON THIS DOCUMENT IS THE PROPERTY OF BHARAT HEAVY ELECTRICALS LIMITED. IT MUST NOT BE USED DIRECTLY OR INDIRECTLY IN ANY WAY DETRIMENTAL TO THE INTEREST OF THE COMPANY

GENERAL DIMENSIONAL LIMITS, FITS & TOLERANCES AS PER HY0230261

INVENTORY NO | SIGN AND DATE | REF | DRG NO 0-2118-2202-10 | COMPUTER FILE NAME

FIRST ANGLE PROJECTION

(ALL DIMENSIONS ARE IN mm)

DRG. NO. 1-301-82-00002 | SH. 01 OF 01

Rz16 = 0.8 (Rz10 = 0.8 Rz100 = 12.5)

POS : 1

SECTION B-B

EXECUTION: 02 "R"

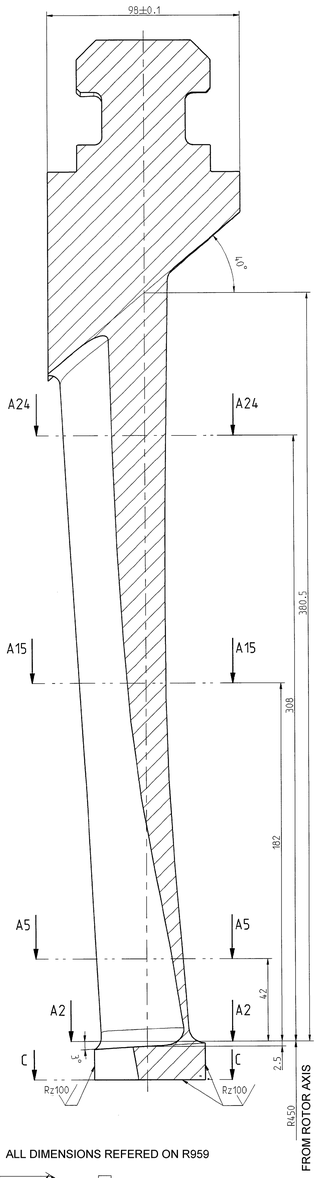

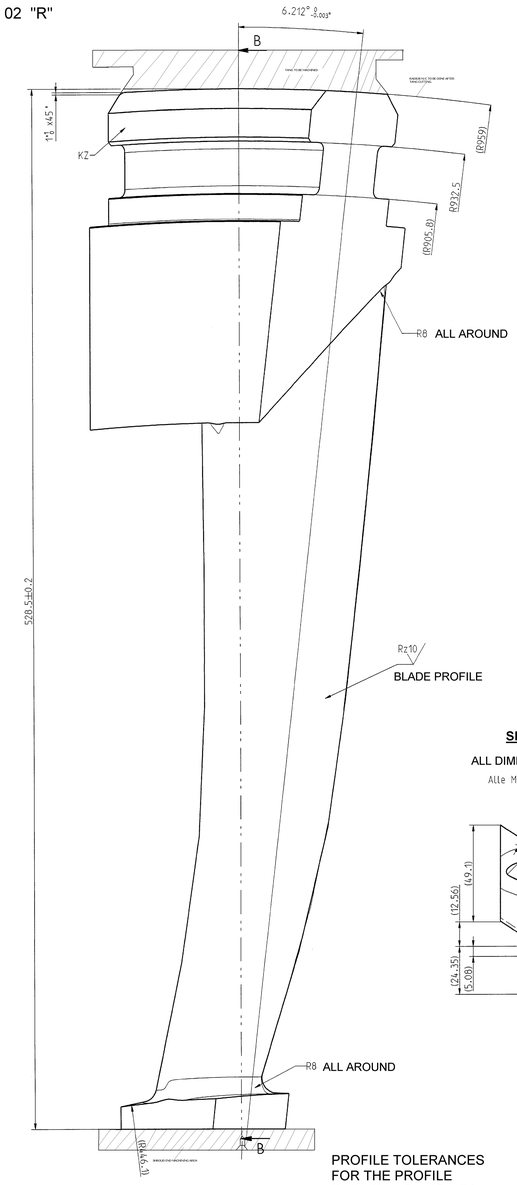

SCHEME OF DIMENSIONS

PRESSURE SIDE

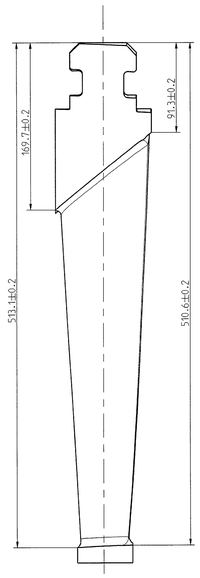

SUCTION SIDE

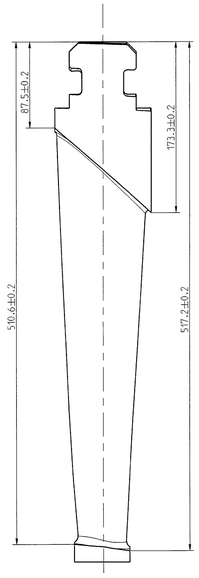

L — LINKS — LEFT

R — RECHTS — RIGHT

EXECUTION: 00 "L"

EXECUTION: 02 "R"

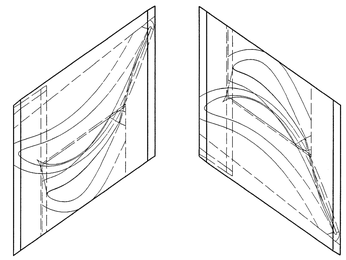

POS : 2

GUIDE BLADES AT JOINT PLANE(2PCS)
MADE BY REWORKING ON NORMAL GIUDE BLADE

EXECUTION: 01 "L"

EXECUTION: 03 "R"

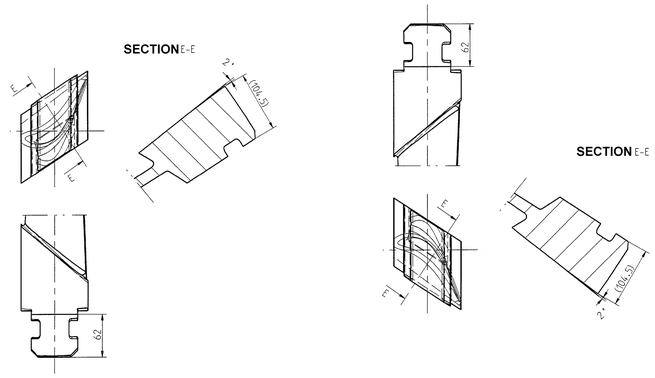

SECTION A2-A2

ALL DIMENSIONS REFERED ON R450

Alle Maße bezogen auf R450

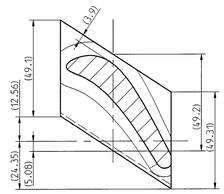

EY VALUE FOR 250mm SINE BAR LENGTH	
FOR LEFT VAR 00 &01	FOR RIGHT VAR 02 &03
EX=7.4245	EX=7.4361
EY=22.8596	EY=22.8596

BLADE ROOT DETAIL

Rz25 = 1.6 (Rz16 = 0.8)

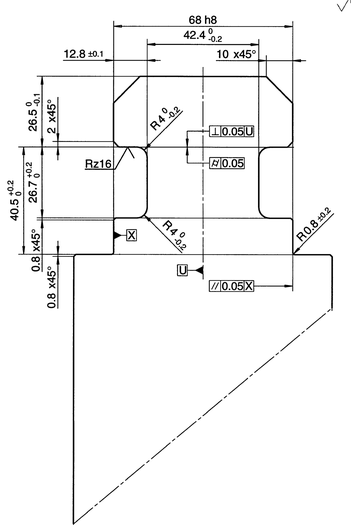

ALL DIMENSIONS REFERED ON R959

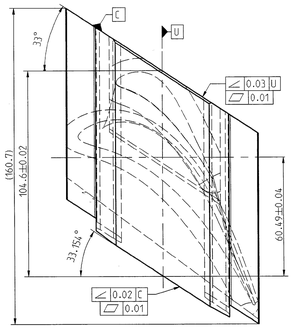

SECTION C-C

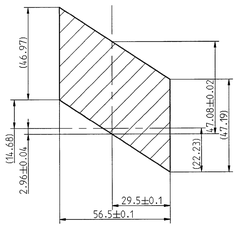

PROFILE TOLERANCES FOR THE PROFILE SECTION A5, A15, A24.

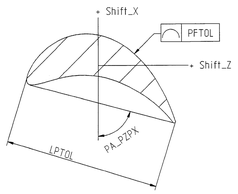

PFTOL	0.30
Shift_X	+0.60 -0.30
Shift_Z	+0.60 -0.30
PA_PZPX	±0.30°
LPTOL	+0.30 -0.60

NOTES:

1. Profile co-ordinates as per drawing No: 0-301-82-00001-00
2. Profile checking sections: A5, A15, A24.
3. Final Machining as per Blading Plan.
4. Total No. of Blades= 58.

FLAT 170X110 X20Cr13V HY10764	2	03	03
	56	02	02
	2	01	01
	56	00	00
Description	No. of Blades	Execution	Var

TYPE OF PRODUCT OR

NAME OF CUSTOMER/PROJECT

BHARAT HEAVY ELECTRICALS LIMITED
HYDERABAD

	NAME	SIGN	DATE	NO OF VAR
DRN	HARISH		14.06.05	NA
CHD	TS PRABHAKAR		14.06.05	
APPD	CNV RAMANA		14.06.05	

DEPT	UNTOL DIMS		SCALE	WEIGHT (KG)	REF TO ASSY DRG	ITEM NO	NO OF ITEMS
ITD CODE 415	GR G/M/F		NTS	10.6	NA	NA	NA

TITLE: LP GUIDE BLADE-3 (SL 2.2 SQM)

CARD CODE

DRAWING NO. 1-301-82-00002

REV 00

SHT No 01 | NO OF SHT 01

THE INFORMATION ON THIS DOCUMENT IS THE PROPERTY OF BHARAT HEAVY ELECTRICALS LIMITED. IT MUST NOT BE USED DIRECTLY OR INDIRECTLY IN ANY WAY DETRIMENTAL TO THE INTEREST OF THE COMPANY

GENERAL DIMENSIONAL LIMITS, FITS & TOLERANCES AS PER HY02230261

INVENTORY NO | SIGN AND DATE | REF | DRG NO 0-2118-2203-10 | COMPUTER FILE NAME

FIRST ANGLE PROJECTION

(ALL DIMENSIONS ARE IN mm)

DRG. NO. 1-303-19-00019 SH. 01 OF 01

Pos No. 1

SCHEME OF DIMENSIONS

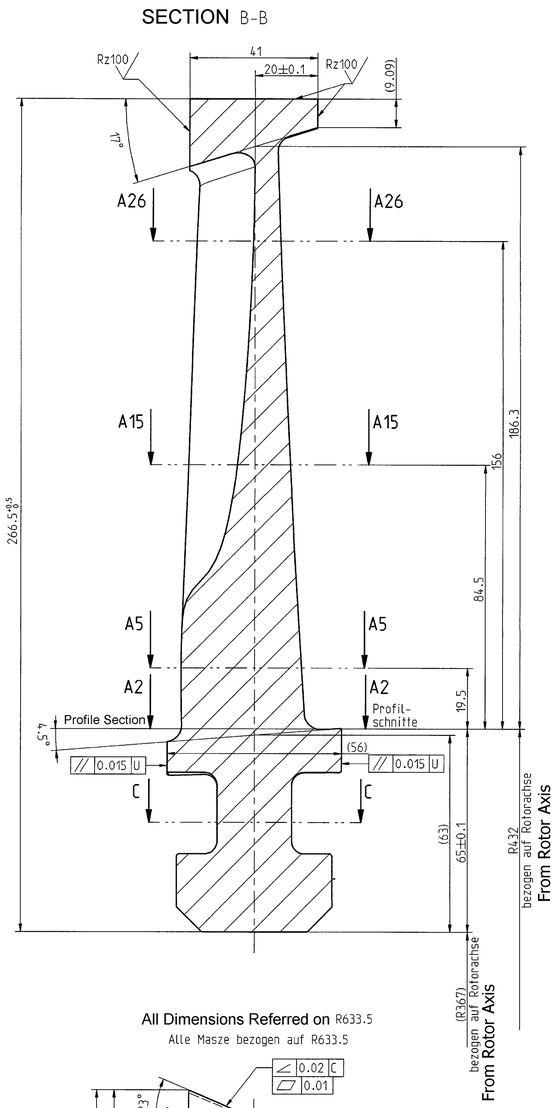

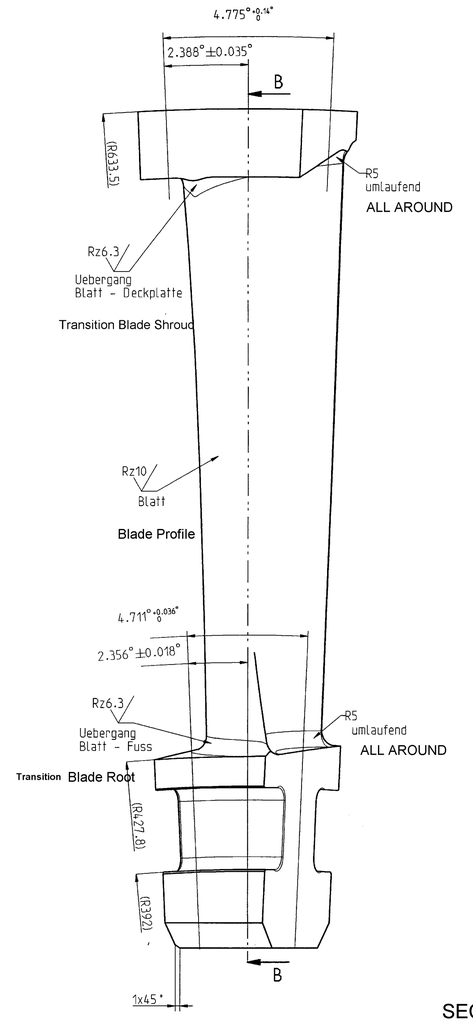

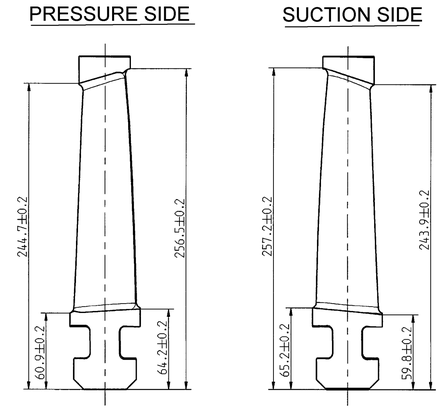

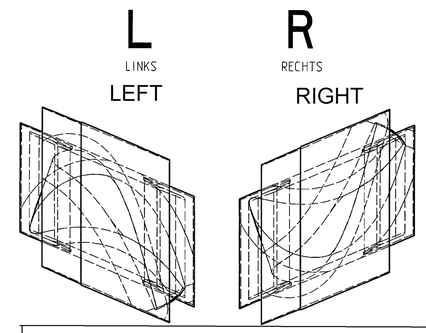

Endschaufeln **LOCK BLADE**

fehlende Maße Endschaufel
siehe Laufschaufel

Pos No. 2

Sachnummer	Drehrichtung
4-4920-2211-00	LINKS
4-4920-2201-00	RECHTS

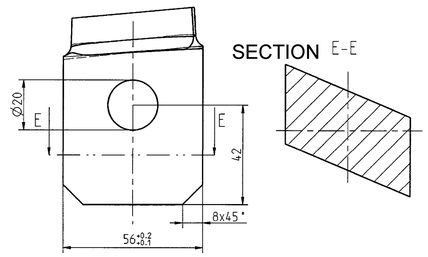

PROFILE TOLERANCE FOR THE CHECKING SECTIONS **AX-AX**

Profiltoleranzen
für die Prüfschnitte AX-AX

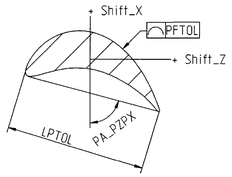

PFTOL	0.20
Shift_X	+0.40 -0.20
Shift_Z	+0.40 -0.20
PA_PZPX	±0.20°
LPTOL	+0.20 -0.40

ROOT DETAIL

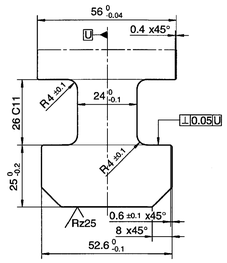

NOTES:

1. Profile co-ordinates a per Drg No. 0-303-19-00005-00.
2. Profile Checking Sections A5, A15,A26.
3. Final Machining as per Blading Plan.
4. Total No. of Blades including Lock Blade : 77 Pieces.
5. For 250mm Length Sin Bar: Ey for Half Angle = 9.579.
   Ey for Full Angle = 19.185.

All Dimensions Referred on R633.5
Alle Masze bezogen auf R633.5

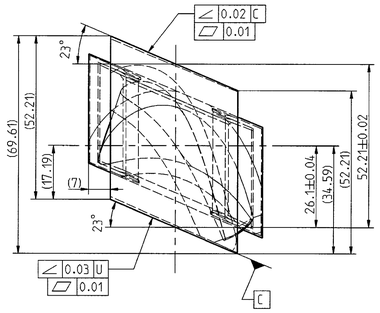

SECTION C - C
Alle Masze bezogen auf R367
All Dimensions Referred on R367

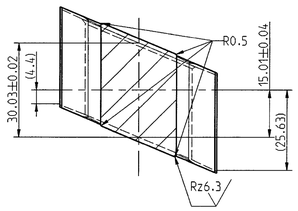

SECTION A2 - A2
Alle Masze bezogen auf R432
All Dimensions Referred on R432

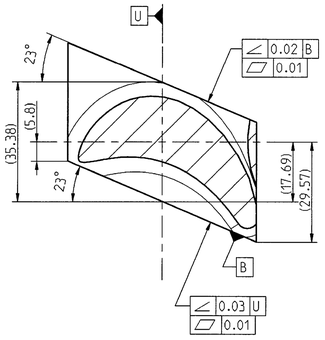

Rz 16 = 0.8, Rz 6.3 = 0.4, Rz 10 = 0.8, Rz 25 = 1.6, Rz 100 = 12.5

DESCRIPTION / MATERIAL SPEC	POS. NO.	DESCRIPTION	VAR
Flat 95X70 / X20Cr13V	2	Lock Blade-Right	03
	1	Normal Blade-Right	02
	2	Lock Blade-Left	01
	1	Normal Blade-Left	00

TYPE OF PRODUCT OR
NAME OF CUSTOMER/PROJECT

BHARAT HEAVY ELECTRICALS LIMITED
HYDERABAD

	NAME	SIGN	DATE	NO OF VAR
DRN	HARISH		08.09.07	NA
CHD	T.S.Prabhakar		08.09.07	
APPD	C.N.V.Ramana		08.09.07	

DEPT ITD CODE 415	UNTOL DIMS GR ¢/M/F	SCALE NTS	WEIGHT (KG) 1.56	REF TO ASSY DRG NA	ITEM NO NA	NO OF ITEMS NA

TITLE **L P MOVING BLADE- 1 (SL 2.2 SQM)**

CARD CODE

DRAWING NO. **1-303-19-00019** REV 00

SHT No 01 NO OF SHT 01

ALTERED	REV	DATE	ALTERED	REV	DATE	ALTERED	REV	DATE	ALTERED	REV	DATE	ALTERED	REV	DATE	ALTERED	REV	DATE	ALTERED	REV	DATE	ALTERED	REV	DATE	ALTERED
CHD/APPD			CHD/APPD			CHD/APPD			CHD/APPD			CHD/APPD			CHD/APPD			CHD/APPD			CHD/APPD			CHD/APPD
	ZONE			ZONE			ZONE			ZONE			ZONE			ZONE			ZONE			ZONE		

THE INFORMATION ON THIS DOCUMENT IS THE PROPERTY OF BHARAT HEAVY ELECTRICALS LIMITED. IT MUST NOT BE USED DIRECTLY OR INDIRECTLY IN ANY WAY DETRIMENTAL TO THE INTEREST OF THE COMPANY

GENERAL DIMENSIONAL LIMITS, FITS & TOLERANCES AS PER HY0230261

INVENTORY NO | SIGN AND DATE | REF DRG NO 0-2128-2201-00 | REV-A | COMPUTER FILE NAME