FIRST ANGLE PROJECTION

(ALL DIMENSIONS ARE IN mm)

DRG. NO. 0-103-07-62012 SH. 01 OF 01

SECTION B-B

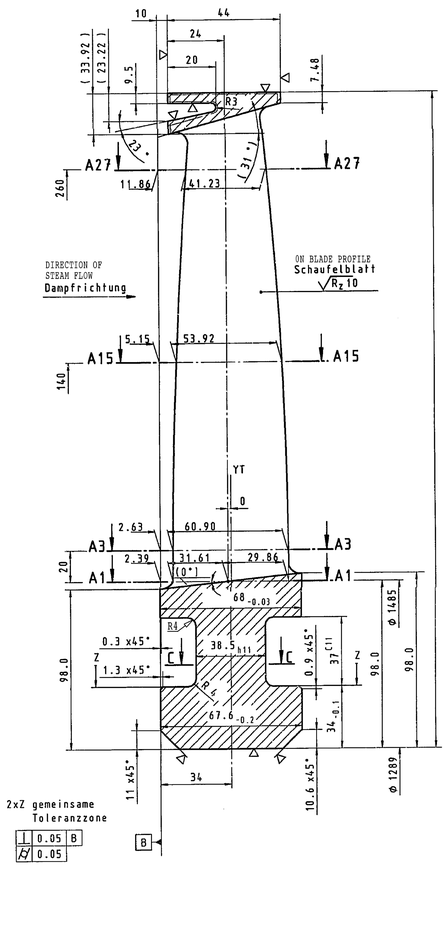

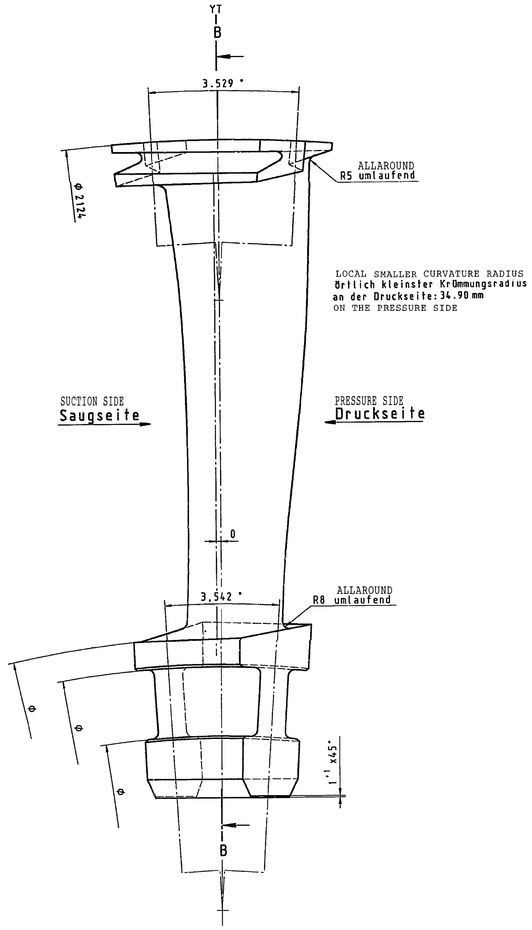

SECTION A27-A27

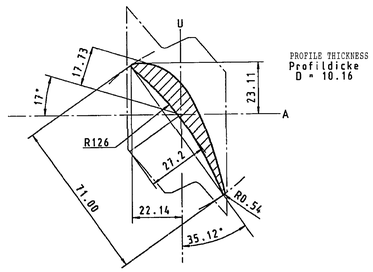

SECTION A15-A15

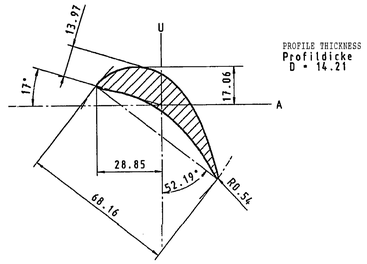

SECTION A3-A3

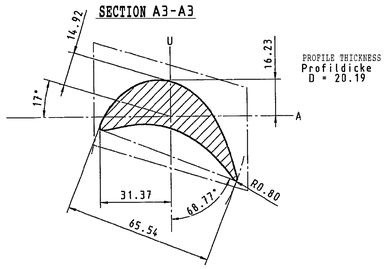

DIMENSIONS FOR DIE
Maßbild für die

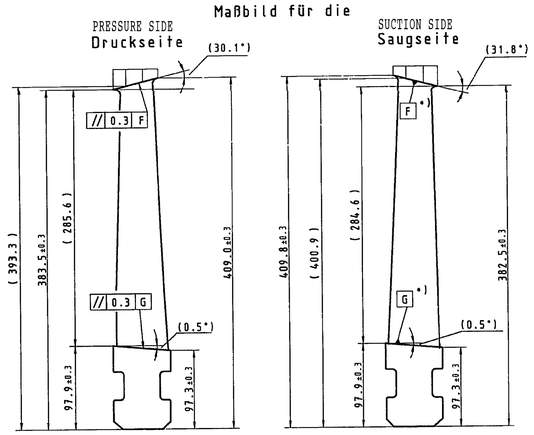

Rohteil in Zentrierlage
BLANK IN CENTER POSITION

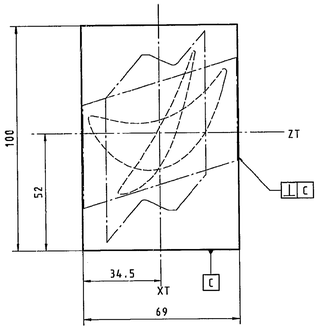

SECTION C-C

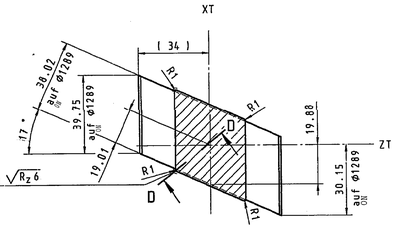

SECTION D-D

SECTION A1-A1

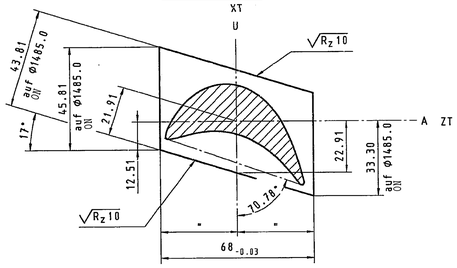

VIEW Z

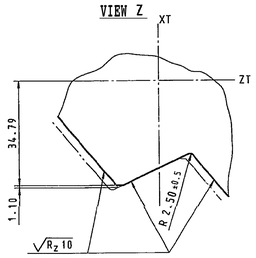

Alle Maße auf Ø2124 bezogen
ALL DIMENSIONS ARE RELATED ON Ø2124

TOLERANCES
Toleranzen

0.25	Profilform	PROFILE FORM
±0.25	Profildicke	PROFILE THICKNESS
±0.25	Profillänge	PROFILE LENGTH
±0.30	Profilwinkel	PROFILE ANGLE
±0.02	Teilung	PITCH

TAPER VALUES FOR JIG LENGTH = 1000mm
Konuswerte f. Vorrichtungsl. 1000 mm

			ROOT Fuß	SHROUD Deckpl.
BLADE POSITION	Schaufellage	Ex	9.031	—
TABLE INCLINATION	Tischneigung	Ey	59.086	—
MEASURED HEIGHT	Meßhöhe	Eh	37.959	—

Strak-Nr: 19114
Profilzeichnung: 7651-24606/010 bis /011
Nutzeichnung: 6661242
Schaufelstückzahl/Reihe: 102
(einschl. Schlußschaufel)

NOTES:

1. PROFILE CO-ORD. AS PER DRG. NO. 0-103-07-62009-00 (2 SH)
2. NUMBER OF PIECES PER ROW INCLUDING LOCK BLADE = 102

THE INFORMATION ON THIS DOCUMENT IS THE PROPERTY OF THE COMPANY NOT BE USED DIRECTLY OR INDIRECTLY IN ANY WAY DETRIMENTAL TO THE INTEREST OF THE COMPANY

GENERAL DIMENSIONAL LIMITS,FITS & TOLERANCES AS PER HY0230261

SIGN. AND DATE	REF. DRG. NO	COMPUTER FILE NAME
	7651-24606 REV:A	0103076212-500-500.TTP

	NAME	SIGN.	DATE	NO.OF VAR.
DRN.	SCS/TBP		23.5.2000	
CHD.	T.S.PRABHAKAR		23.5.2000	NA
APPD.	C.N.V.RAMANA		23.5.2000	

TYPE OF PRODUCT OR NAME OF CUSTOMER/PROJECT

DEPT. ITD — DEPT. CODE 615 — UNTOL. DIMS. CH. ±0/N/f — SCALE NTS — WEIGHT (KG) NA — REF. TO ASSY. DRG. NA — ITEM NO. NA — NO.OF ITEMS NA

TITLE LP MOVING BLADE-1L (F116-64/72-320-70.78°) (NEW 5.0Sqm)

CAGE CODE N.A. — DRAWING NO. 0-103-07-62012 — REV. 00 — SHT. No 01 — NO. OF SHT. 01

-00 VAR

REV.	DATE	ALTERED CHD/APPD	ZONE

THIRD ANGLE PROJECTION

(ALL DIMENSIONS ARE IN mm)

DWG. NO. 0-351-29-61004

NOTES:

1. FOR APPLICABLE DRAWING NOTES SEE ITEM 2.

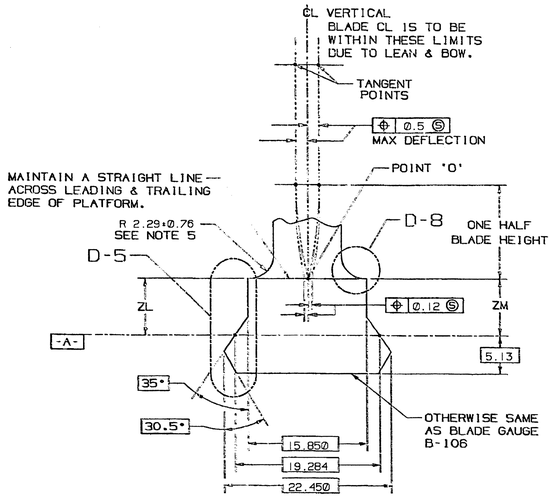

SECTIONS BA-BA, BB-BB & BC-BC (G-3)

SECTION	ZL ± 0.25	ZM ± 0.25
BA-BA	3.89	3.45
BB-BB	7.49	7.49
BC-BC	12.42	12.98

SEE NOTE 6

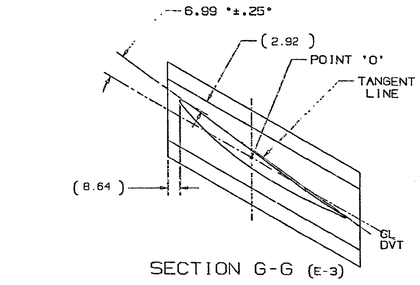

SECTION G-G (E-3)

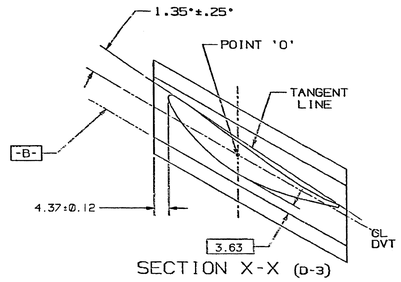

SECTION X-X (D-3)

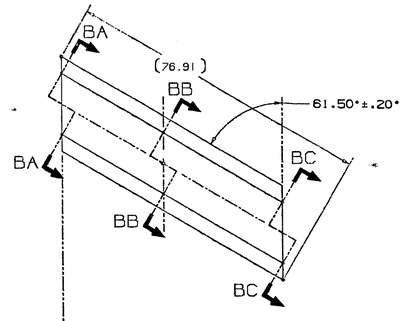

VIEW F-3 (F-3)
(AIRFOIL DELETED FOR CLARITY)

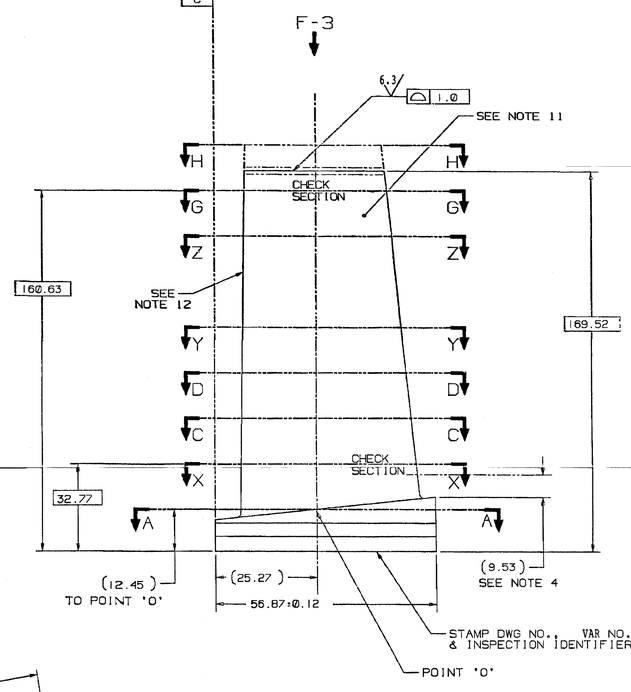

-C-	F-4	1
-B-	F-6	1
-A-	F-8	1
DATUM	ZONE	SHEET

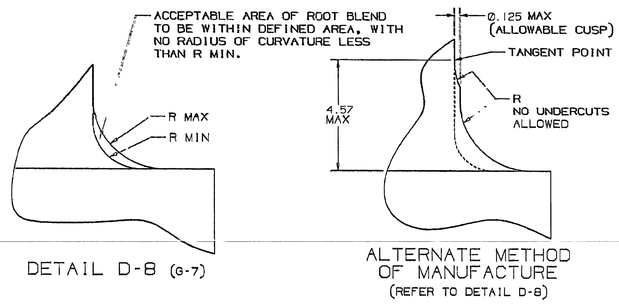

DETAIL D-8 (G-7)

ALTERNATE METHOD OF MANUFACTURE
(REFER TO DETAIL D-8)

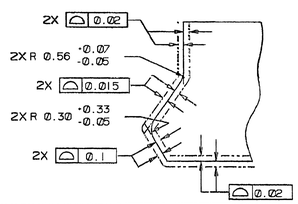

DETAIL D-5 (G-7)

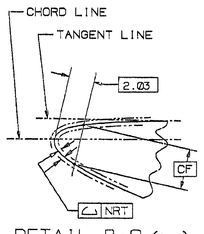

DETAIL B-8 (C-6)
(LEADING EDGE)

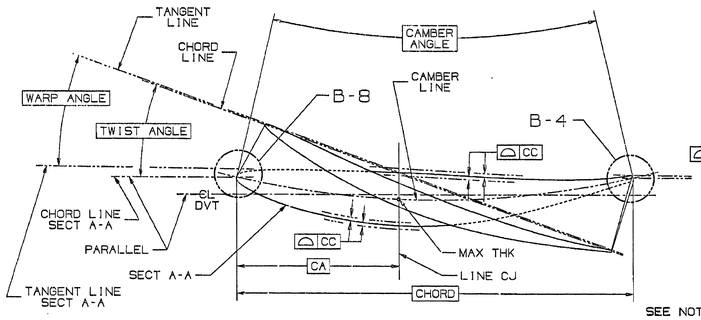

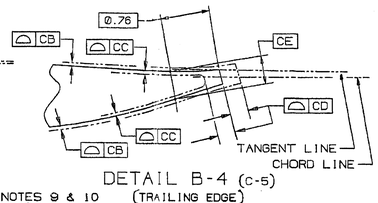

DETAIL B-4 (C-5)
(TRAILING EDGE)

SEE NOTES 9 & 10

SECTION	SECTION HEIGHT	CHORD	PERCENT THICKNESS	CAMBER ANGLE	TWIST ANGLE	WARP ANGLE	THICKNESS AT 'CA'	CA	CB	CC	CD	CE	CF	NRT
A-A	0.00	56.90	13.500	28.950	.000	.000	7.676	22.758	0.064	0.127	0.569	0.942	2.710	0.076
X-X	20.32	55.68	12.613	28.850	.900	.780	7.018	22.271	0.058	0.117	0.556	0.864	2.504	0.076
C-C	42.39	54.38	11.676	28.700	1.750	1.523	6.345	21.753	0.053	0.107	0.544	0.782	2.291	0.076
D-D	74.68	52.48	10.308	28.400	3.200	2.855	5.405	20.990	0.046	0.089	0.526	0.668	1.986	0.076
Y-Y	106.93	50.60	8.940	27.900	4.750	4.319	4.521	20.239	0.038	0.076	0.505	0.566	1.692	0.076
Z-Z	139.70	48.67	7.552	27.250	6.650	6.097	3.713	19.467	0.038	0.076	0.488	0.556	1.405	0.076
G-G	148.18	48.18	7.192	27.050	7.000	6.421	3.513	19.274	0.038	0.076	0.483	0.554	1.333	0.076
H-H	157.15	47.65	6.812	26.800	7.517	6.913	3.302	19.060	0.038	0.076	0.477	0.551	1.257	0.076

MATL HY10996 OWSA VAR 01	-	10
COAT AS PER ITEM 7 OWSA VAR 01	P3	03
COAT AS PER ITEM 6 OWSA VAR 01	P2	02
MATL. HY10988 (AISI 403 Cb)	P1	01
DESCRIPTION	REF	VAR NO

MATING PART REFERENCE DATA	
POINT 'O' Ø	1135.13
CONE ANGLE	8.800
DOVETAIL ANGLE	61.500

7	COATING, ALUMINUM-INORGANIC	P18A-AG3	GT10125
6	COATING, ALUMINUM-INORGANIC	P18A-AG5	GT10606
5	ACPT REQT-BLADES & VANES	P29A-AG900	GT10128
4	COMPR VANES-PROCESSING	P3C-AG60	GT10063
3	X-Y COORDS (217X184)	324A5233	GT10354
2	APPLICABLE DWG NOTES	314A5112	GT10607
1	APPLIED PRACTICES	348A5200	HY0230261
IT.	NOMENCLATURE	IDENT	BHEL SPEC

LIST OF COMPLEMENTARY DOCUMENTS

GENERAL DIMENSIONAL LIMITS, FITS & TOLERANCES AS PER HY0230261

COMPUTER FILE NAME 01216541.TIF

REF DWG. NO. 10985153 REV -

SCH. AND DATE

MATERIAL NO

TYPE OF PRODUCT OR NAME OF CUSTOMER/PROJECT: GAS TURBINE FR-6B

	NAME	SIGN.	DATE	NO. OF VAR.
DRN.	CMBS		01.04.99	
CHD.	R.SRINIVAS		01.04.99	NA
APPD.	K.N.N		01.04.99	

REV.	DATE	ALTERED	CHD/APPD	ZONE

DEPT. GTE CODE 423 | UNTOL. DIMS. CR. IC/N/F | SCALE NTS | WEIGHT (KG) 0.32 | REF. TO ASSY. DRG. - NA | ITEM NO. NA | NO. OF ITEMS NA

TITLE: VANE STATOR STG 3

CARD CODE | DRAWING NO. 0-351-29-61004 | REV. 00 | SHT. No 01 | NO OF SHT. 01

THIRD ANGLE PROJECTION

(ALL DIMENSIONS ARE IN mm)

DRG. NO. 0-351-29-61005 SH. 01 OF 01

NOTES:

1. FOR APPLICABLE DRAWING NOTES SEE ITEM 2.

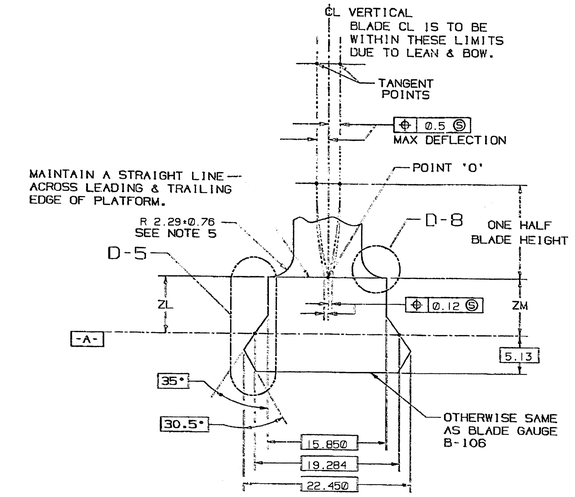

SECTIONS BA-BA, BB-BB & BC-BC (G-3)

SEE NOTE 6

SECTION	ZL ±0.25	ZM ±0.25
BA-BA	4.39	3.91
BB-BB	4.04	4.04
BC-BC	3.96	4.60

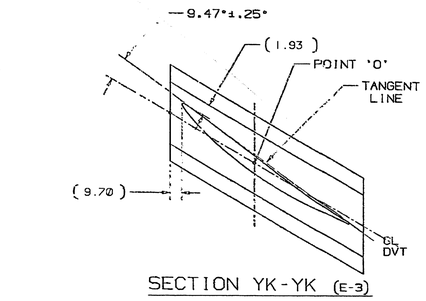

SECTION YK-YK (E-3)

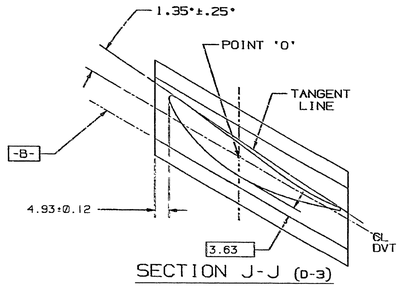

SECTION J-J (D-3)

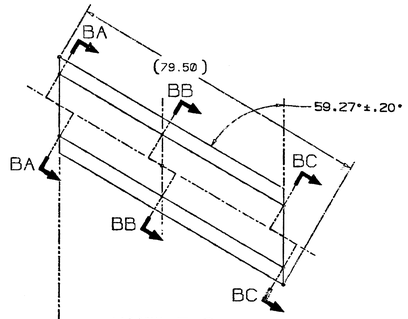

VIEW F-3 (F-3)

(AIRFOIL DELETED FOR CLARITY)

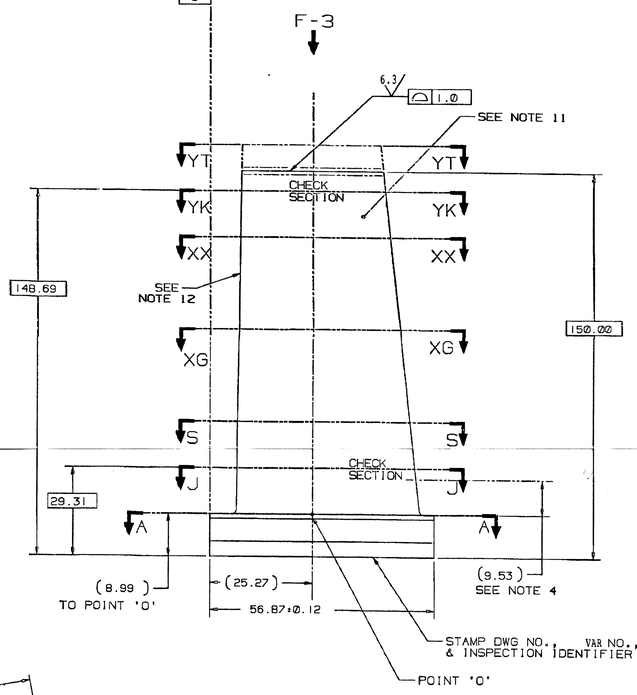

-C-	F-4	1
-B-	F-6	1
-A-	F-8	1
DATUM	ZONE	SHEET

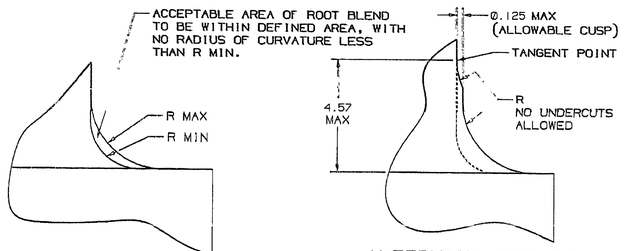

DETAIL D-8 (G-7)

ALTERNATE METHOD OF MANUFACTURE

(REFER TO DETAIL D-8)

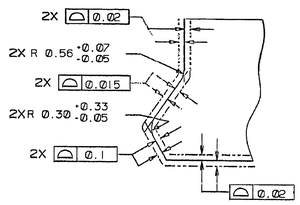

DETAIL D-5 (G-7)

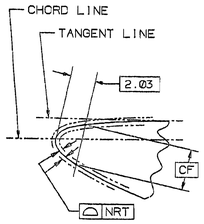

DETAIL B-8 (C-6)

(LEADING EDGE)

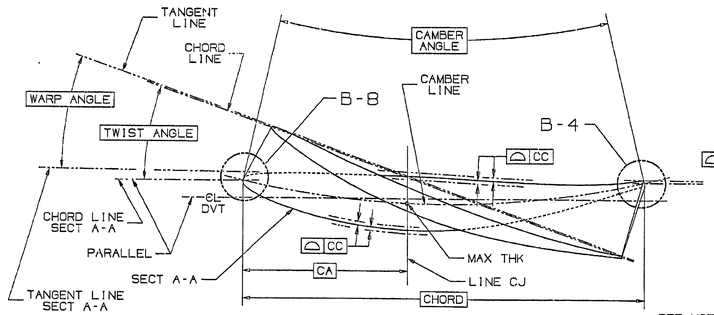

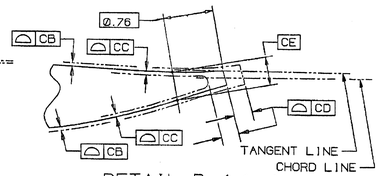

DETAIL B-4 (C-5)

(TRAILING EDGE)

SEE NOTES 9 & 10

SECTION	SECTION HEIGHT	CHORD	PERCENT THICKNESS	CAMBER ANGLE	TWIST ANGLE	WARP ANGLE	THICKNESS AT 'CA'	CA	CB	CC	CD	CE	CF	NRT
A-A	0.00	56.90	13.500	28.950	.000	.000	7.676	22.758	0.064	0.127	0.569	0.942	2.710	0.076
J-J	20.32	55.70	12.640	28.850	.900	.783	7.036	22.280	0.058	0.117	0.556	0.866	2.509	0.076
S-S	38.10	54.66	11.800	28.700	1.550	1.336	6.444	21.864	0.053	0.107	0.546	0.795	2.322	0.076
XG-XG	73.66	52.58	10.380	28.400	3.100	2.762	5.453	21.031	0.045	0.091	0.526	0.676	2.000	0.076
XX-XX	109.22	50.49	8.870	27.900	5.850	5.412	4.481	20.198	0.038	0.076	0.505	0.556	1.676	0.076
YK-YK	139.70	48.72	7.580	27.300	9.450	8.899	3.729	19.487	0.038	0.076	0.488	0.556	1.412	0.076
YT-YT	157.48	47.67	6.830	26.800	10.350	9.747	3.312	19.070	0.038	0.076	0.477	0.511	1.260	0.076

MATL HY10996 OWSA VAR 01	-	10
COAT AS PER ITEM 7 OWSA VAR 01	P3	03
COAT AS PER ITEM 6 OWSA VAR 01	P2	02
MATL. HY10988 (AISI 403 CD)	P1	01
DESCRIPTION	REF	VAR NO

MATING PART REFERENCE DATA	
POINT 'O' Ø	1113.76
CONE ANGLE	.000
DOVETAIL ANGLE	59.267

7	COATING, ALUMINUM-INORGANIC	P16A-A93	GT10125
6	COATING, ALUMINUM-INORGANIC	P16A-A95	GT10526
5	ACPT REOT-BLADES & VANES	P29A-A6900	GT10128
4	COMPR VANES-PROCESSING	P3C-A960	GT10283
3	X-Y COORDS (217X220)	324A9237	GT10355
2	APPLICABLE DWG NOTES	314A5112	GT10507
1	APPLIED PRACTICES	348A9200	HY0230261
IT.	NOMENCLATURE	IDENT	BHEL SPEC.

LIST OF COMPLEMENTARY DOCUMENTS

GENERAL DIMENSIONAL LIMITS, FITS & TOLERANCES AS PER HY0230261

COMPUTER FILE NAME 0129651.STF

REF. DWG. NO. 10965154 REV.

SIGN. AND DATE

INVENTORY NO

TYPE OF PRODUCT OR NAME OF CUSTOMER/PROJECT: GAS TURBINE FR-6B

	NAME	SIGN.	DATE	NO.OF VAR.
DRN.	CMBS		01.06.99	
CHD.	R.SRINIVAS		01.06.99	NA
APPD.	K.N.N		01.06.99	

DEPT.	UNTOL. DIMS. OR		SCALE	WEIGHT (KG)	REF. TO ASSY. DRG.	ITEM NO.	NO.OF ITEMS
6F6 CODE: 423	K/N/F		NTS	0.32	- N/A	NA	NA

TITLE: VANE STATOR STG 4

CARD CODE

DRAWING NO. 0-351-29-61005 REV. 00

SHT. No. 01 NO OF SHT. 01

REV.	DATE	ALTERED CHD/APPD	ZONE

THIRD ANGLE PROJECTION

(ALL DIMENSIONS ARE IN mm)

0-351-29-61006

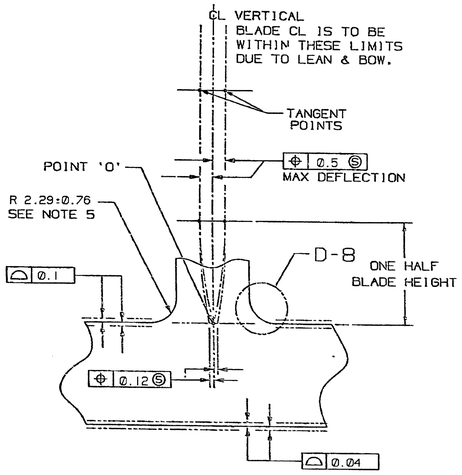

SECTION F-7 (G-3)

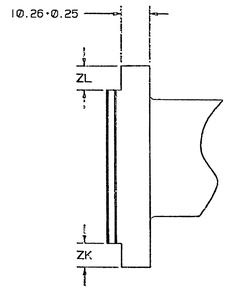

VIEW F-5 (G-5)

F-5 →

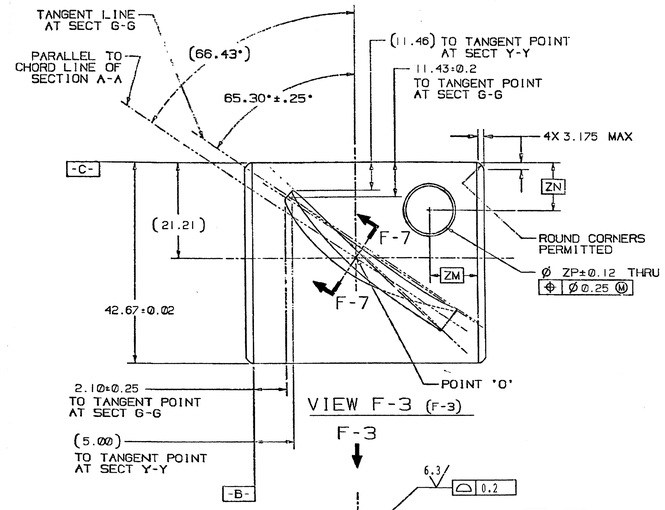

VIEW F-3 (F-3)

F-3 ↓

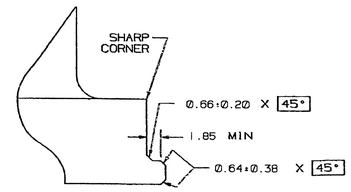

DETAIL E-5 (C-3)
(APPLIES TO BOTH SIDES OF BASE)

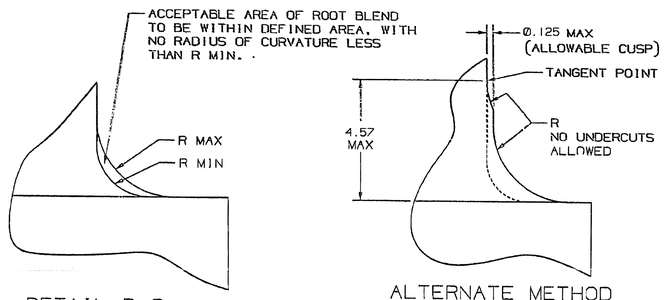

DETAIL D-8 (G-7)

ALTERNATE METHOD OF MANUFACTURE
(REFER TO DETAIL D-8)

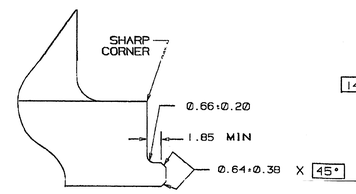

ALTERNATE METHOD OF MANUFACTURE
(REFER TO DETAIL E-5)

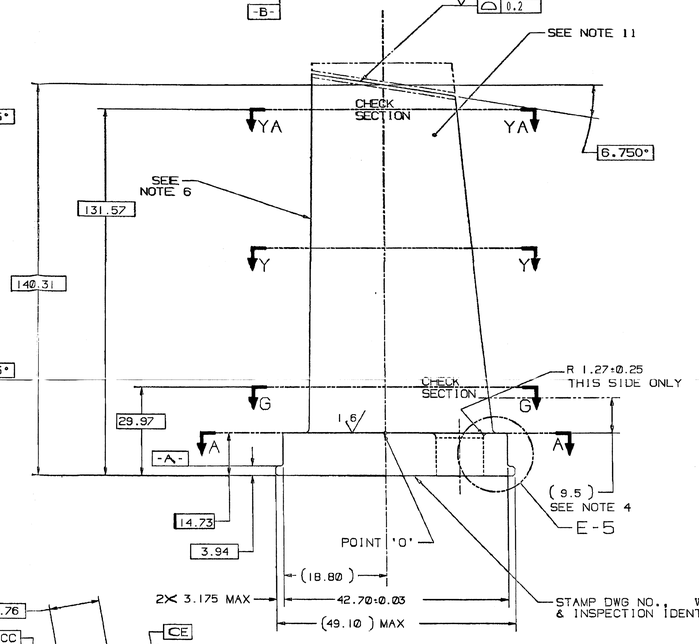

NOTES:

1. FOR APPLICABLE DRAWING NOTES SEE ITEM 2.

VAR	ZK± 0.12	ZL± 0.12	ZM	ZN	ZP	MATERIAL	COATING	REF
01	OMIT	OMIT	OMIT	OMIT	OMIT	HY10988	OMIT	P1
02	OMIT	6.73	OMIT	OMIT	OMIT	HY10988	OMIT	P2
03	6.73	OMIT	OMIT	OMIT	OMIT	HY10988	OMIT	P3
04	OMIT	OMIT	OMIT	OMIT	OMIT	HY10988	ITEM 6	P4
05	OMIT	6.73	OMIT	OMIT	OMIT	HY10988	ITEM 6	P5
06	6.73	OMIT	OMIT	OMIT	OMIT	HY10988	ITEM 6	P6
07	OMIT	OMIT	OMIT	OMIT	OMIT	HY10988	ITEM 7	P7
08	OMIT	6.73	OMIT	OMIT	OMIT	HY10988	ITEM 7	P8
09	6.73	OMIT	OMIT	OMIT	OMIT	HY10988	ITEM 7	P9
10	OMIT	OMIT	9.14	9.14	14.27	HY10988	OMIT	P10
11	OMIT	OMIT	9.14	9.14	14.27	HY10988	ITEM 6	P11
12	OMIT	OMIT	9.14	9.14	14.27	HY10988	ITEM 7	P12
25	MATL HY10996 OWSA VAR 02							-
26	MATL HY10996 OWSA VAR 03							-
27	MATL HY10996 OWSA VAR 10							-

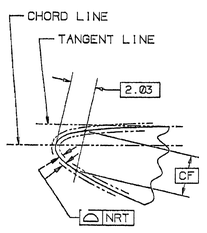

DETAIL B-8 (C-6)
(LEADING EDGE)

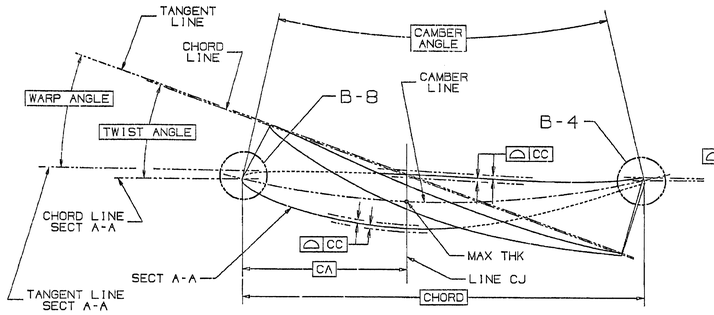

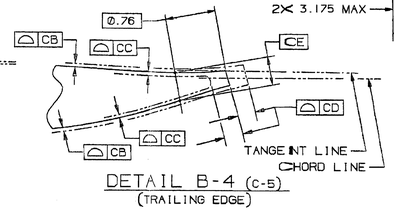

DETAIL B-4 (C-5)
(TRAILING EDGE)

SECTION	SECTION HEIGHT	CHORD	PERCENT THICKNESS	CAMBER ANGLE	TWIST ANGLE	WARP ANGLE	THICKNESS AT 'CA'	CA	CB	CC	CD	CE	CF	NRT
A-A	0.00	42.67	13.500	27.800	.000	.000	5.756	17.069	0.048	0.086	0.427	0.729	2.342	0.076
G-G	15.24	41.88	13.100	28.000	.567	.500	5.484	16.754	0.046	0.091	0.418	0.696	2.250	0.076
Y-Y	53.34	39.90	12.000	28.300	2.231	2.000	4.785	15.961	0.041	0.079	0.399	0.612	2.012	0.076
YA-YA	116.84	36.60	10.200	28.750	5.322	4.829	3.767	14.640	0.038	0.076	0.366	0.574	1.641	0.076

-C-	G-4	1	
-B-	F-3	1	
-A-	D-4	1	
DATUM	ZONE	SHEET	

MATING PART REFERENCE DATA	
POINT 'O' Ø	1113.76
CONE ANGLE	.000

7	COATING, ALUMINUM-INORGANIC	P16A-A93	GT10125
6	COATING, ALUMINUM-INORGANIC	P16A-A95	GT10626
5	ACPT REQT-BLADES & VANES	P29A-A99OG	GT10128
4	COMPR VANES-PROCESSING	P3C-A960	GT10833
3	X-Y COORDS (217X221)	324A5238	GT10356
2	APPLICABLE DWG NOTES	314A5140	GT10459
1	APPLIED PRACTICES	348A9200	HY0230261
IT.	NOMENCLATURE	IDENT	BHEL SPEC

LIST OF COMPLEMENTARY DOCUMENTS

TYPE OF PRODUCT OR NAME OF CUSTOMER/PROJECT: GAS TURBINE FR-6B

	NAME	SIGN.	DATE	NO. OF VAR.
DRN.	CNBS		01.06.99	
CHD.	R.SRINIVAS		01.06.99	NA
APPD.	K.N.M		01.06.99	

DEPT. CODE	UNTOL. DIMS. OR	SCALE	WEIGHT (KG)	REF. TO ASSY. DRG.	ITEM NO.	NO. OF ITEMS
423	E/M/F	NTS	0.32	-/NA	NA	NA

TITLE: VANE STATOR STG 5

CARD CODE

DRAWING NO. 0-351-29-61006 REV. 00

SHT. No. 01 NO OF SHT. 01

REV.	DATE	ALTERED CHD/APPD	ZONE

THE INFORMATION ON THIS DOCUMENT IS THE PROPERTY OF BHEL. IT MUST NOT BE USED DIRECTLY OR INDIRECTLY IN ANY WAY DETRIMENTAL TO THE INTEREST OF THE COMPANY

GENERAL DIMENSIONAL LIMITS,FITS & TOLERANCES AS PER HY0230261

COMPUTER FILE NAME 01294861.CTF

SIGN. AND DATE | REF. DWG. NO. 1095155 REV -

INVENTORY NO.

THIRD ANGLE PROJECTION

(ALL DIMENSIONS ARE IN mm)

DRG. NO. 0-351-29-61009 SH. 01 OF 01

NOTES:

1. FOR APPLICABLE DRAWING NOTES SEE ITEM 2.

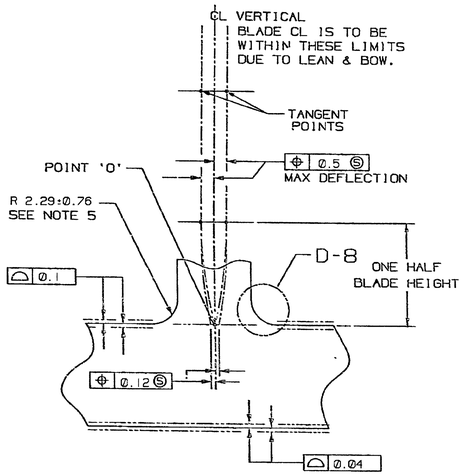

SECTION F-7 (G-3)

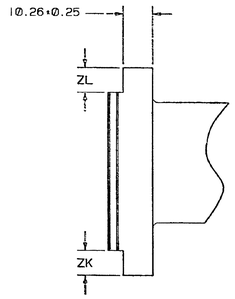

VIEW F-5 (G-5)

F-5 →

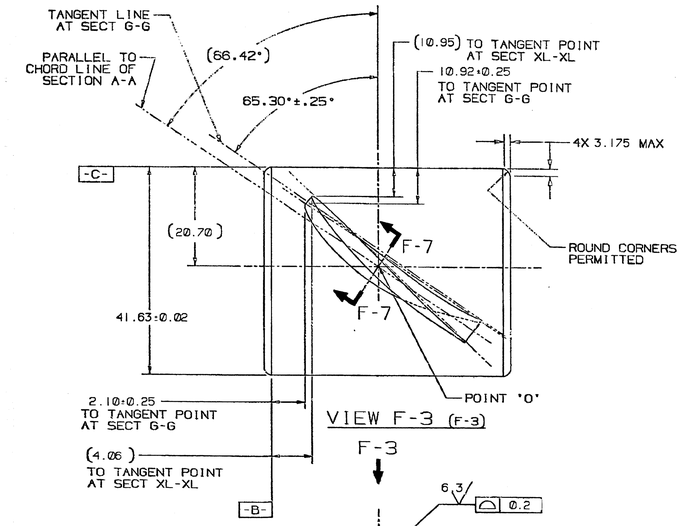

VIEW F-3 (F-3)

F-3 ↓

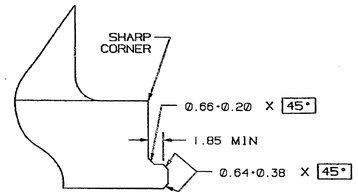

DETAIL E-5 (C-3)

(APPLIES TO BOTH SIDES OF BASE)

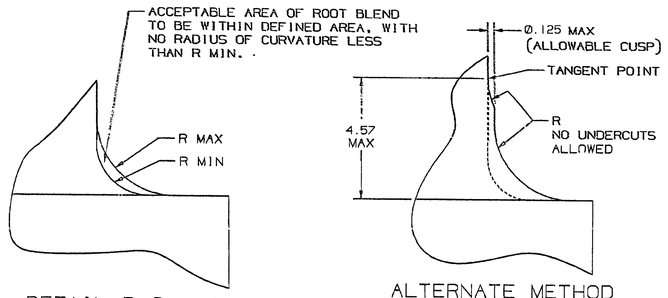

DETAIL D-8 (G-7)

ALTERNATE METHOD OF MANUFACTURE (REFER TO DETAIL D-8)

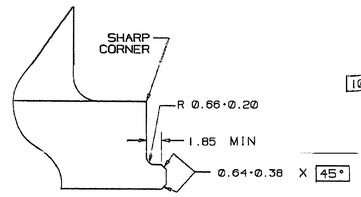

ALTERNATE METHOD OF MANUFACTURE (REFER TO DETAIL E-5)

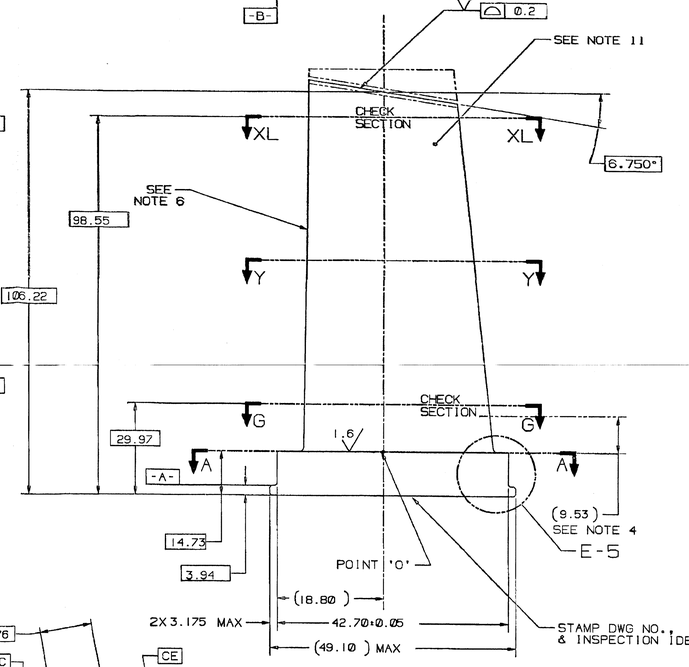

VAR	ZK ± 0.12	ZL ± 0.12	MATERIAL	COATING	REF
01	OMIT	OMIT	HY10988	OMIT	P1
02	OMIT	6.73	HY10988	OMIT	P2
03	6.73	OMIT	HY10988	OMIT	P3
04	OMIT	OMIT	HY10988	ITEM 6	P4
05	OMIT	6.73	HY10988	ITEM 6	P5
06	6.73	OMIT	HY10988	ITEM 6	P6
07	OMIT	OMIT	HY10988	ITEM 7	P7
08	OMIT	6.73	HY10988	ITEM 7	P8
09	6.73	OMIT	HY10988	ITEM 7	P9
25	MATL HY10996 OWSA VAR 01				-
26	MATL HY10996 OWSA VAR 02				-
27	MATL HY10996 OWSA VAR 03				-

-C-	G-4	1
-B-	F-3	1
-A-	D-4	1
DATUM	ZONE	SHEET

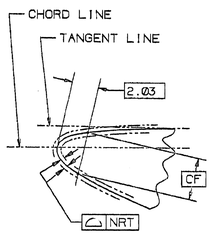

DETAIL B-8 (C-6)

(LEADING EDGE)

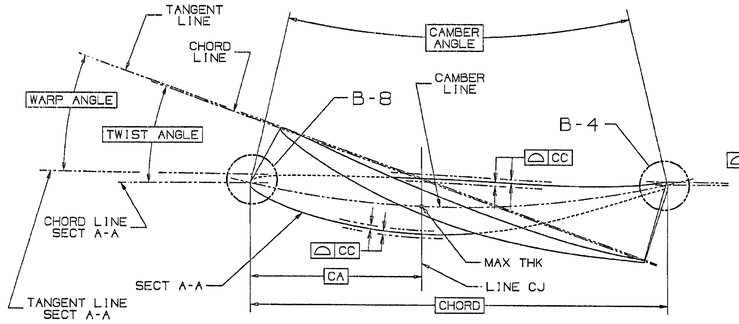

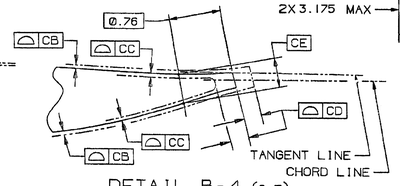

DETAIL B-4 (C-5)

(TRAILING EDGE)

MATING PART REFERENCE DATA	
POINT 'O' Ø	1113.76
CONE ANGLE	.000

SECTION	SECTION HEIGHT	CHORD	PERCENT THICKNESS	CAMBER ANGLE	TWIST ANGLE	WARP ANGLE	THICKNESS AT 'CA'	CA	CB	CC	CD	CE	CF	NRT
A-A	0.00	42.67	13.500	27.900	.000	.000	5.756	17.069	0.048	0.096	0.427	0.729	2.342	0.076
G-G	15.24	41.88	13.100	28.000	.567	.500	5.484	16.754	0.046	0.091	0.419	0.696	2.250	0.076
Y-Y	53.34	39.90	12.000	28.300	2.231	2.000	4.785	15.961	0.041	0.079	0.399	0.612	2.012	0.076
XL-XL	83.82	38.30	11.100	28.500	3.682	3.324	4.262	15.321	0.038	0.076	0.384	0.582	1.824	0.076

7	COATING, ALUMINUM-INORGANIC	P16A-AG3	GT10125
6	COATING, ALUMINUM-INORGANIC	P16A-AG5	GT10006
5	ACPT REQT-BLADES & VANES	P29A-AG900	GT10128
4	COMPR VANES-PROCESSING	P3C-AG60	GT10083
3	X-Y COORDS (217A221)	324A5238	GT10356
2	APPLICABLE DWG NOTES	314A5140	GT10459
1	APPLIED PRACTICES	348A9200	HY0230261
IT.	NOMENCLATURE	IDENT	BHEL SPEC
	LIST OF COMPLEMENTARY DOCUMENTS		

GENERAL DIMENSIONAL LIMITS, FITS & TOLERANCES AS PER HY0230261

COMPUTER FILE NAME 0126591.RIF

REF. DWG. NO. 1895158 REF -

SIGN. AND DATE

INVENTORY NO

REV.	DATE	ALTERED CHD/APPD	ZONE

TYPE OF PRODUCT OR NAME OF CUSTOMER/PROJECT: GAS TURBINE FR-6B

	NAME	SIGN.	DATE	NO. OF VAR.
DRN.	CNBS		10.04.99	
CHD.	R.SRINIVAS		10.04.99	NA
APPD.	R.N.M		10.04.99	

DEPT. STG CODE 423 | UNTOL. DIMS. CR. ±N/F | SCALE NTS | WEIGHT (KG) 0.32 | REF. TO ASSY. DRG. - NA | ITEM NO. NA | NO. OF ITEMS NA

TITLE: VANE STATOR STG 8

CARD CODE | DRAWING NO. 0-351-29-61009 | REV. 00

SHT. No 01 | NO OF SHT. 01

THIRD ANGLE PROJECTION

(ALL DIMENSIONS ARE IN mm)

DRG. NO. 0-351-29-61010 SH. 01 OF 01

NOTES:

1. FOR APPLICABLE DRAWING NOTES SEE ITEM 2.

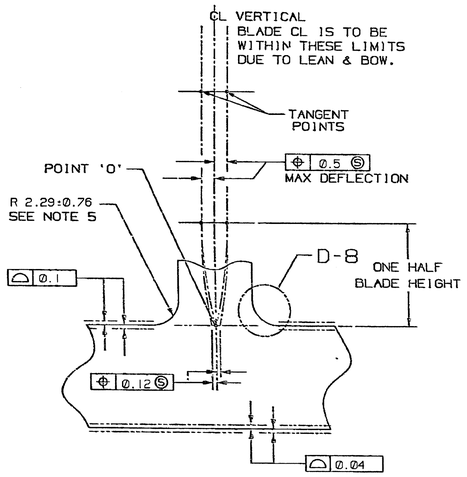

SECTION F-7 (G-3)

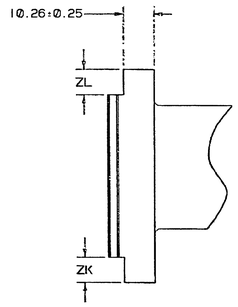

VIEW F-5 (G-5)

F-5 →

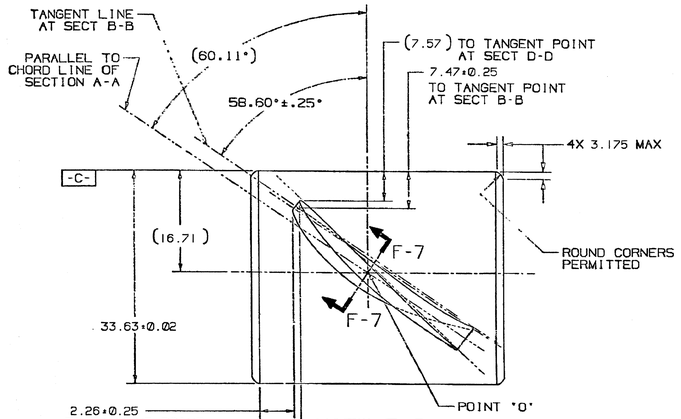

VIEW F-3 (F-3)

F-3 ↓

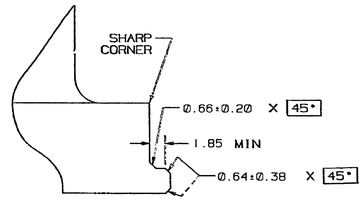

DETAIL E-5 (C-3)
(APPLIES TO BOTH SIDES OF BASE)

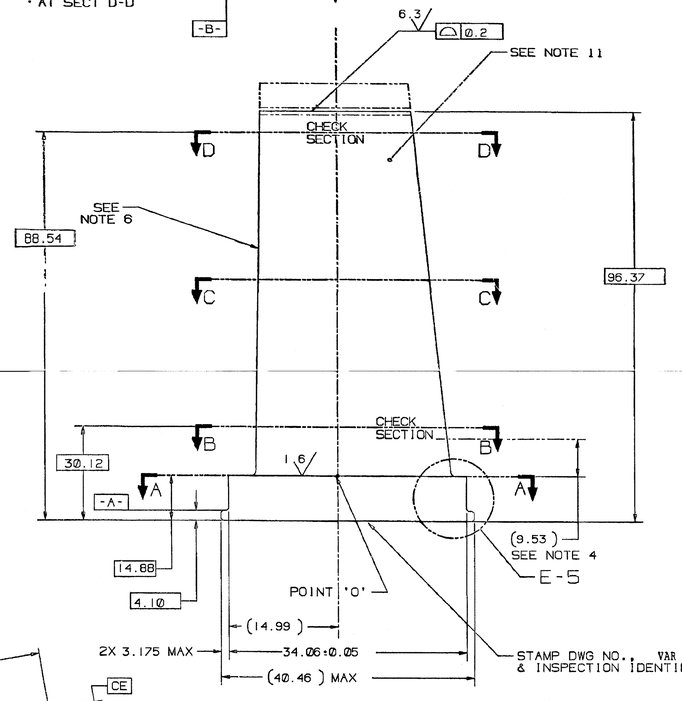

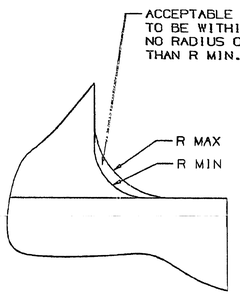

DETAIL D-8 (G-7)

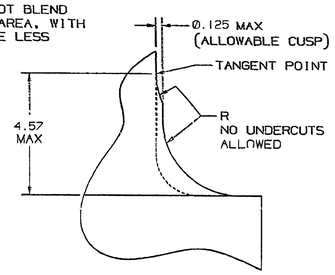

ALTERNATE METHOD OF MANUFACTURE
(REFER TO DETAIL D-8)

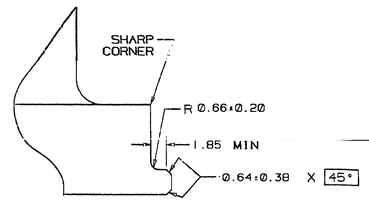

ALTERNATE METHOD OF MANUFACTURE
(REFER TO DETAIL E-5)

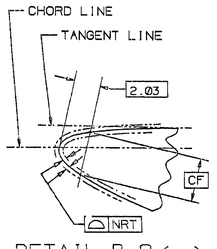

DETAIL B-8 (C-6)
(LEADING EDGE)

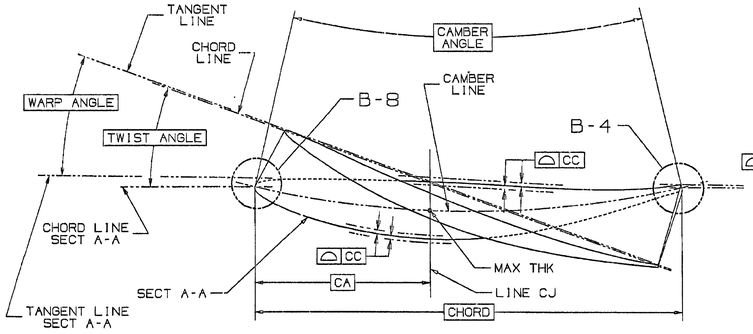

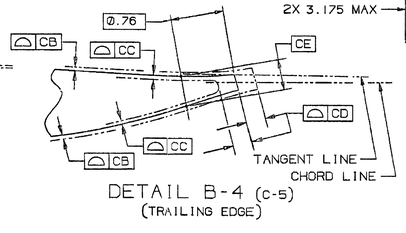

DETAIL B-4 (C-5)
(TRAILING EDGE)

VAR	ZK± 0.12	ZL±0.12	MATERIAL	COATING
01	OMIT	OMIT	HY1Ø988	OMIT
02	OMIT	6.73	HY1Ø988	OMIT
03	6.73	OMIT	HY1Ø988	OMIT
04	OMIT	OMIT	HY1Ø988	ITEM 6
05	OMIT	6.73	HY1Ø988	ITEM 6
06	6.73	OMIT	HY1Ø988	ITEM 6
07	OMIT	OMIT	HY1Ø988	ITEM 7
08	OMIT	6.73	HY1Ø988	ITEM 7
09	6.73	OMIT	HY1Ø988	ITEM 7

-C-	G-4	1
-B-	F-3	1
-A-	D-4	1
DATUM	ZONE	SHEET

MATING PART REFERENCE DATA	
POINT 'O' Ø	1113.76
CONE ANGLE	.000

SECTION	SECTION HEIGHT	CHORD	PERCENT THICKNESS	CAMBER ANGLE	TWIST ANGLE	WARP ANGLE	THICKNESS AT 'CA'	CA	CB	CC	CD	CE	CF	NRT
A-A	0.00	34.80	13.500	24.600	.000	.000	4.694	13.920	0.038	0.079	0.348	0.612	2.116	0.076
B-B	15.24	34.14	12.800	24.600	.791	.600	4.376	13.655	0.038	0.076	0.340	0.594	1.989	0.076
C-C	45.72	32.79	11.604	24.600	2.434	1.967	3.835	13.116	0.038	0.076	0.328	0.584	1.770	0.076
D-D	73.66	31.55	10.399	24.600	4.006	3.317	3.335	12.619	0.038	0.076	0.315	0.576	1.559	0.076

IT.	NOMENCLATURE	IDENT	
7	COATING, ALUMINUM-INORGANIC	P16A-AG3	GT10125
6	COATING, ALUMINUM-INORGANIC	P16A-AG5	GT10606
5	ACPT REOT-BLADES & VANES	P29A-AG900	GT10128
4	COMPR VANES-PROCESSING	P3C-AG60	GT10083
3	X-Y COORDS (21TX359)	32A6221H	GT10351
2	APPLICABLE DWG NOTES	31A45140	GT10459
1	APPLIED PRACTICES	34BA9200	HY0230261
	LIST OF COMPLEMENTARY DOCUMENTS		BHEL SPEC

TYPE OF PRODUCT OR NAME OF CUSTOMER/PROJECT: GAS TURBINE FR-6B

	NAME	SIGN.	DATE	NO.OF VAR.
DRN.	CMBS	R.Srinivas	08.06.99	
CHD.	R.SRINIVAS	R.Srinivas	08.06.99	NA
APPD.	K.N.M	K.Nair	08.06.99	

DEPT. CODE	UNTOL. DIMS.	SCALE	WEIGHT (KG)	REF. TO ASSY. DRG.	ITEM NO.	NO.OF ITEMS
STG 423	GR. ±N/F	NTS	0.18	- N/A	NA	NA

TITLE: VANE STATOR, STG 9

CARD CODE

DRAWING NO. 0-351-29-61010 REV. 00

SHT. No. 01 NO OF SHT. 01

REV.	DATE	ALTERED CHD/APPD	ZONE

GENERAL DIMENSIONAL LIMITS, FITS & TOLERANCES AS PER HY0230261

COMPUTER FILE NAME 01296101.TTF

REF. DWG. NO. 10995159 REV -

SUB. AND DATE

INVENTOR AND

THIRD ANGLE PROJECTION

(ALL DIMENSIONS ARE IN mm)

DRG. NO. 0-351-29-61014 SH. 01 OF 01

NOTES:

1. FOR APPLICABLE DRAWING NOTES SEE ITEM 2.

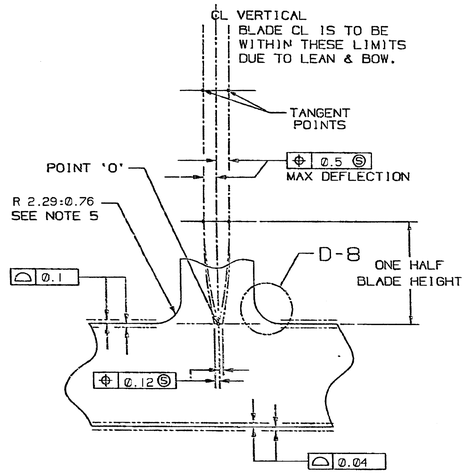

SECTION F-7 (G-3)

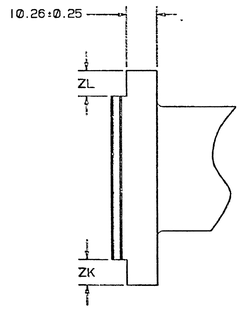

VIEW F-5 (G-5)

F-5 →

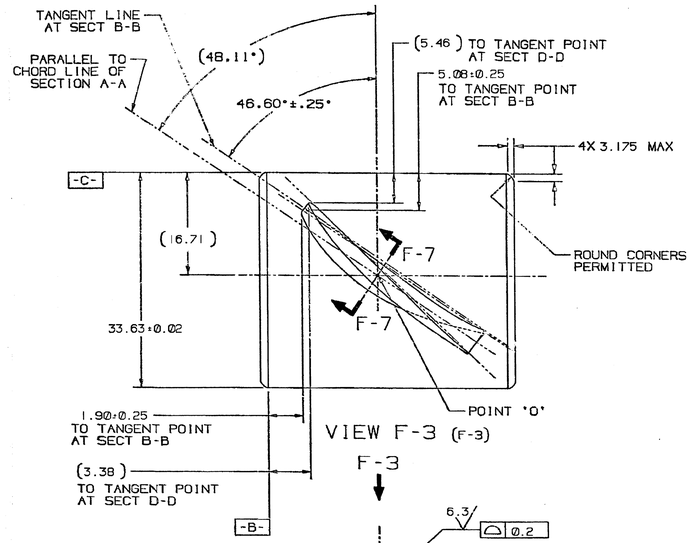

VIEW F-3 (F-3)

F-3 ↓

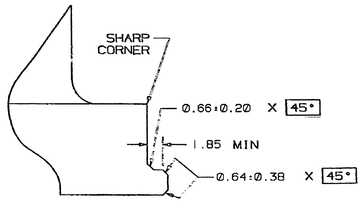

DETAIL E-5 (C-3)
(APPLIES TO BOTH SIDES OF BASE)

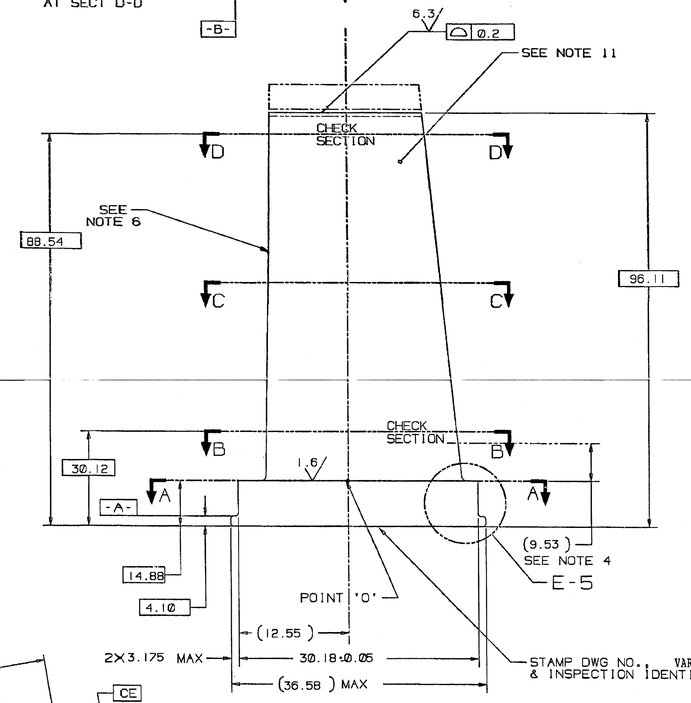

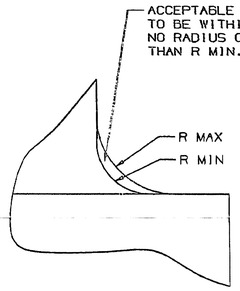

DETAIL D-8 (G-7)

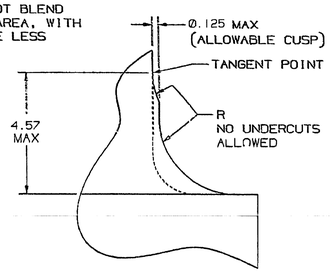

ALTERNATE METHOD OF MANUFACTURE
(REFER TO DETAIL D-8)

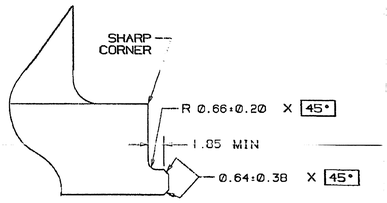

ALTERNATE METHOD OF MANUFACTURE
(REFER TO DETAIL E-5)

VAR	ZK± 0.12	ZL±0.12	MATERIAL	COATING
01	OMIT	OMIT	HY10988	OMIT
02	OMIT	6.73	HY10988	OMIT
03	6.73	OMIT	HY10988	OMIT
04	OMIT	OMIT	HY10988	ITEM 6
05	OMIT	6.73	HY10988	ITEM 6
06	6.73	OMIT	HY10988	ITEM 6
07	OMIT	OMIT	HY10988	ITEM 7
08	OMIT	6.73	HY10988	ITEM 7
09	6.73	OMIT	HY10988	ITEM 7
99	In house mfg. OWSA Var01			
98	In house mfg. OWSA Var02			
97	In house mfg. OWSA Var03			

-C-	G-4	1
-B-	F-3	1
-A-	D-4	1
DATUM	ZONE	SHEET

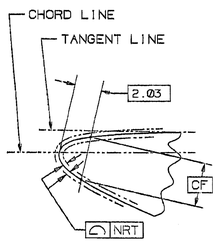

DETAIL B-8 (C-6)
(LEADING EDGE)

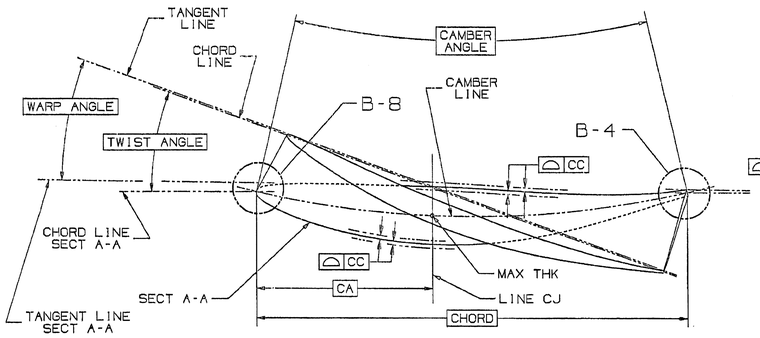

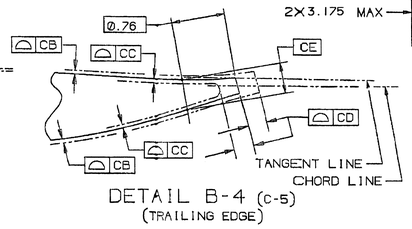

DETAIL B-4 (C-5)
(TRAILING EDGE)

MATING PART REFERENCE DATA	
POINT 'O' Ø	1113.76
CONE ANGLE	.000

SECTION	SECTION HEIGHT	CHORD	PERCENT THICKNESS	CAMBER ANGLE	TWIST ANGLE	WARP ANGLE	THICKNESS AT 'CA'	CA	CB	CC	CD	CE	CF	NRT
A-A	0.00	34.80	13.500	24.600	.000	.000	4.694	13.920	0.038	0.079	0.348	0.612	2.116	0.076
B-B	15.24	34.14	12.800	24.600	.791	.600	4.376	13.655	0.038	0.076	0.340	0.594	1.989	0.076
C-C	45.72	32.79	11.604	24.600	2.434	1.967	3.835	13.116	0.038	0.076	0.328	0.584	1.770	0.076
D-D	73.66	31.55	10.399	24.600	4.006	3.317	3.335	12.619	0.038	0.076	0.315	0.576	1.559	0.076

7	COATING, ALUMINUM-INORGANIC	P16A-A93	GT10125
6	COATING, ALUMINUM-INORGANIC	P16A-A95	GT10026
5	ACPT REOT-BLADES & VANES	P29A-A9900	GT10128
4	COMPR VANES-PROCESSING	P3C-A960	GT10083
3	X-Y COORDS (21T3359)	32A85234	GT10351
2	APPLICABLE DWG NOTES	314A5140	GT10459
1	APPLIED PRACTICES	348A9200	HY0230261
IT.	NOMENCLATURE	IDENT	BHEL SPEC
	LIST OF COMPLEMENTARY DOCUMENTS		

TYPE OF PRODUCT OR NAME OF CUSTOMER/PROJECT: GAS TURBINE FR-6B

	NAME	SIGN.	DATE	NO. OF VAR.
DRN.	CMBS	R.Srinivas	18.04.99	
CHD.	R.SRIBIVAS	R.Srinivas	18.04.99	NA
APPD.	R.N.M	[illegible]	18.04.99	

DEPT. CODE	UNIT. DIMS.	SCALE	WEIGHT (KG)	REF. TO ASSY. DRG.	ITEM NO.	NO. OF ITEMS
423	MM	NTS	0.18	- NA	NA	NA

TITLE: VANE STATOR, STG 13

CARD CODE

DRAWING NO. 0-351-29-61014 REV. 01

SHT. No. 01 NO OF SHT. 01

REV.	DATE	ALTERED	CHD/APPD
01	13/7/05	KDG	CHD/APPD NVS

DCA No. GT1635

VAR 99,98,97 ADDED

GENERAL DIMENSIONAL LIMITS, FITS & TOLERANCES AS PER HY0230261

SIGN AND DATE: NEXT DWG NO. - 0-351-29-61015 REV 01 / 13/05/03 REV 01 / COMPARED FOR NEW 01/06/11.TTF

INVENTORY NO

THIRD ANGLE PROJECTION

(ALL DIMENSIONS ARE IN mm)

DRG. NO. 0-351-29-61019 SH. 01 OF 01

NOTES:

1. FOR APPLICABLE DRAWING NOTES SEE ITEM 2.

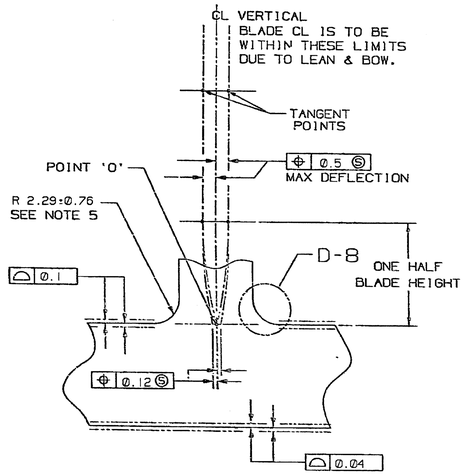

SECTION F-7 (G-3)

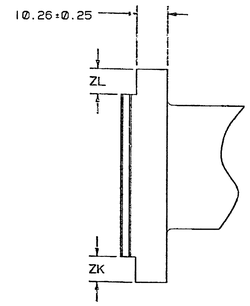

VIEW F-5 (G-5)

F-5 →

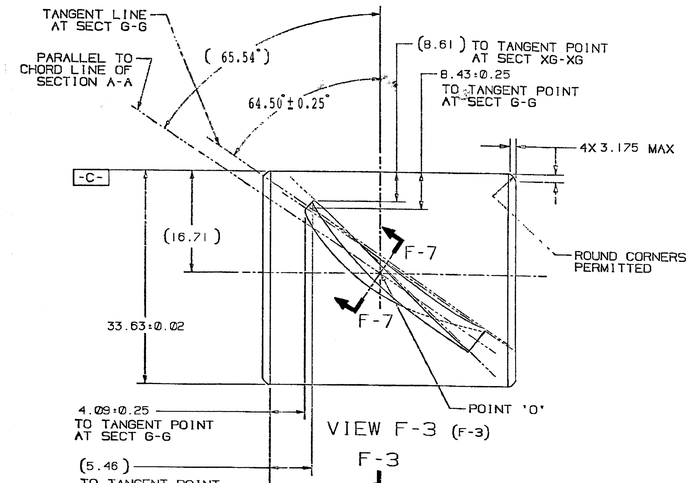

VIEW F-3 (F-3)

F-3 ↓

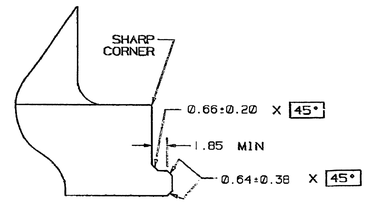

DETAIL E-5 (C-3)
(APPLIES TO BOTH SIDES OF BASE)

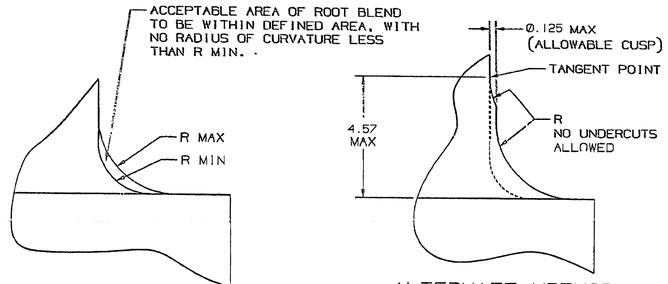

DETAIL D-8 (G-7)

ALTERNATE METHOD OF MANUFACTURE
(REFER TO DETAIL D-8)

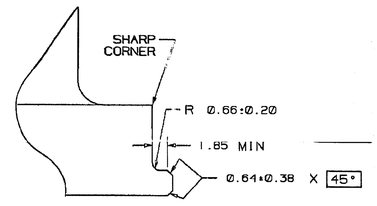

ALTERNATE METHOD OF MANUFACTURE
(REFER TO DETAIL E-5)

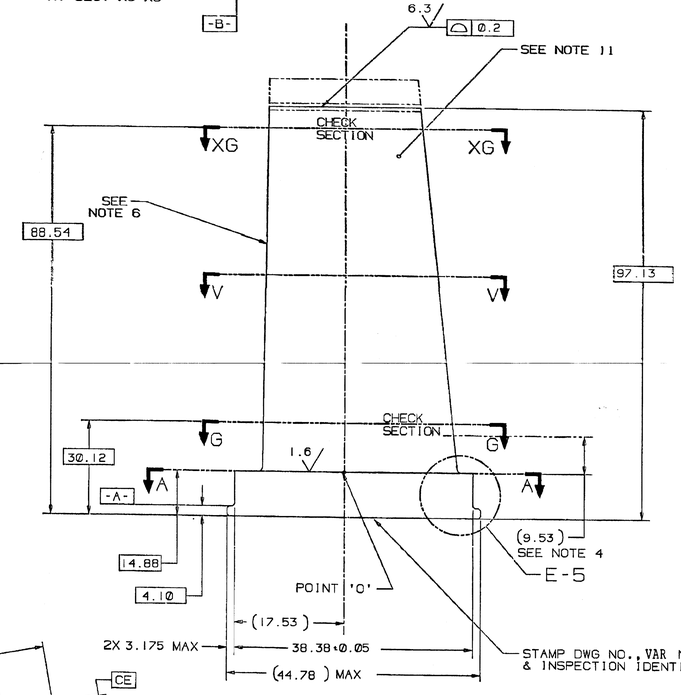

VAR	ZK± 0.12	ZL±0.12	MATERIAL	COATING
01	OMIT	OMIT	HY10988	OMIT
02	OMIT	6.73	HY10088	OMIT
03	6.73	OMIT	HY10988	OMIT
04	OMIT	OMIT	HY10088	ITEM 6
05	OMIT	6.73	HY10088	ITEM 6
06	6.73	OMIT	HY10088	ITEM 6
07	OMIT	OMIT	HY10988	ITEM 7
08	OMIT	6.73	HY10988	ITEM 7
09	6.73	OMIT	HY10988	ITEM 7

-C-	G-4	1
-B-	F-3	1
-A-	D-4	1
DATUM	ZONE	SHEET

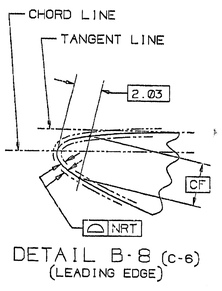

DETAIL B-8 (C-6)
(LEADING EDGE)

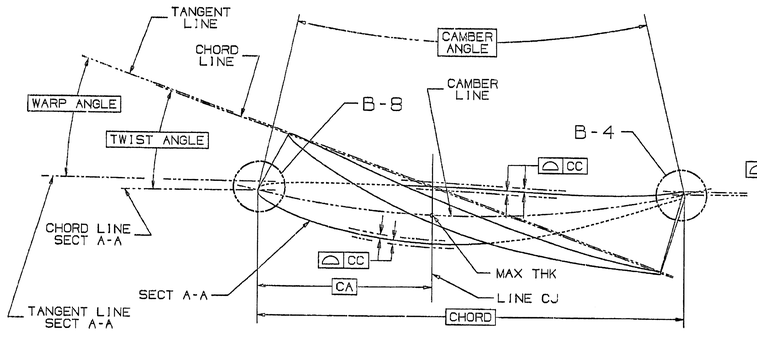

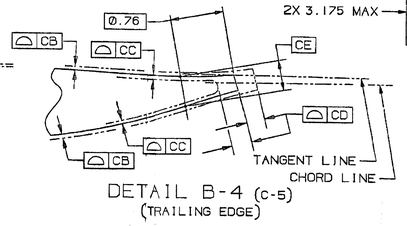

DETAIL B-4 (C-5)
(TRAILING EDGE)

MATING PART REFERENCE DATA	
POINT 'O' Ø	1113.76
CONE ANGLE	.000

SECTION	SECTION HEIGHT	CHORD	PERCENT THICKNESS	CAMBER ANGLE	TWIST ANGLE	WARP ANGLE	THICKNESS AT 'CA'	CA	CB	CC	CD	CE	CF	NRT
A-A	0.00	34.80	13.500	29.5	0.00	0.00	4.694	13.920	0.038	0.079	0.348	0.612	2.108	0.076
G-G	15.24	34.14	12.800	29.8	0.625	0.50	4.376	13.655	0.038	0.076	0.340	0.594	1.979	0.076
V-V	45.72	32.79	11.604	30.3	1.821	1.50	3.835	13.116	0.038	0.076	0.328	0.584	1.763	0.076
XG-XG	73.66	31.55	10.399	30.8	2.785	2.30	3.335	12.619	0.038	0.076	0.315	0.574	1.552	0.076

7	COATING, ALUMINUM-INORGANIC	P16A-A63	GT10125
6	COATING, ALUMINUM-INORGANIC	P16A-A65	GT10606
5	ACPT REOT-BLADES & VANES	P29A-AG900	GT10128
4	COMPR VANES-PROCESSING	P3C-A060	GT10263
3	X-Y COORDS (216X942)	342A1111	GT10350
2	APPLICABLE DWG NOTES	314A5140	GT10459
1	APPLIED PRACTICES	348A9200	HY0230261
IT.	NOMENCLATURE	IDENT	BUEL SPEC
	LIST OF COMPLEMENTARY DOCUMENTS		

TYPE OF PRODUCT OR NAME OF CUSTOMER/PROJECT: GAS TURBINE FR-6B

	NAME	SIGN	DATE	NO. OF VAR.
DRN.	CMBS			NA
CHD.	A.SRINIVAS			
APPD.	Y.K.N			

DEPT. CODE 423 | UNTOL. DIMS. ±X/N/F | SCALE NIS | WEIGHT (KG) 0.22 | REF. TO ASSY. DRG. - NA | ITEM NO. NA | NO. OF ITEMS NA

TITLE: VANE STATOR EGV1

CARD CODE | DRAWING NO. 0-351-29-61019 | REV. 00

SHT. No 01 | NO OF SHT. 01

GENERAL DIMENSIONAL LIMITS,FITS & TOLERANCES AS PER HY0230261

COMPUTER FILE NAME 01296191.RTF

SUCH AND DATE | REF DWG. NO. 10992168 REF -

INFORMATION ONLY

REV.	DATE	ALTERED CHD/APPD
ZONE		

THIRD ANGLE PROJECTION

(ALL DIMENSIONS ARE IN mm)

SH. 01 OF 01 DRG. NO 0-35129-91010

NOTES:

1. FOR APPLICABLE DRAWING NOTES SEE ITEM 2.

DRAWING		PRECISION MASTER	
PT NO	REV	DWG NO	REV
1-9, 102-103	C	217X237	–

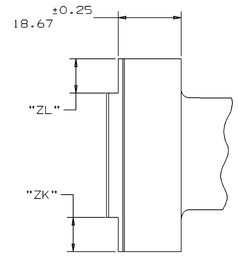

VIEW G-5 (G-4)

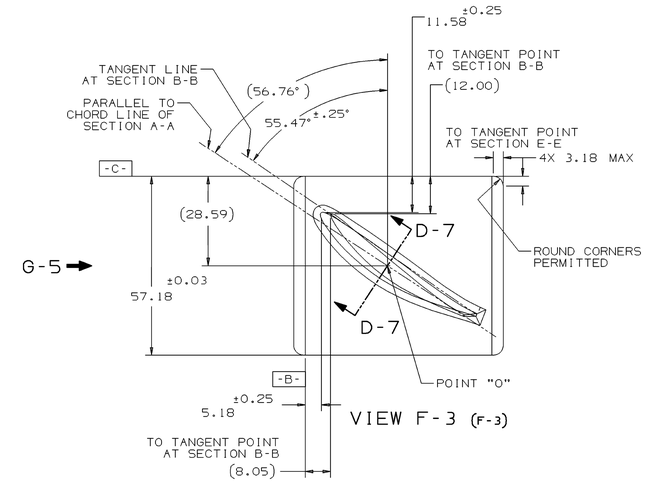

VIEW F-3 (F-3)

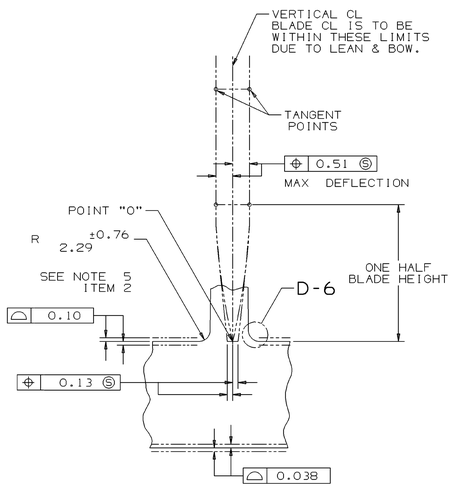

SECTION D-7 (G-3)

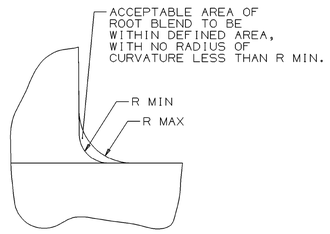

DETAIL D-6 (E-7)

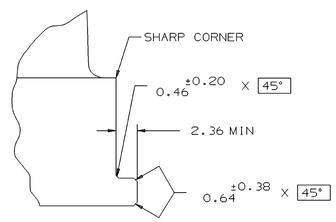

DETAIL D-5 (C-2)
(APPLIES TO BOTH SIDES OF BASE)

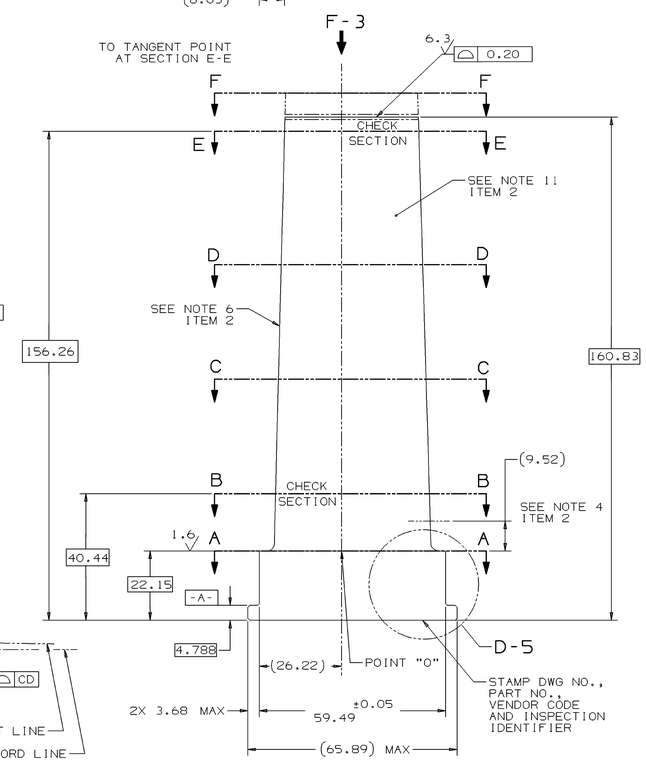

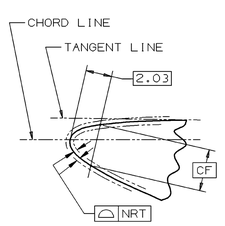

DETAIL B-8 (C-6)
(LEADING EDGE)

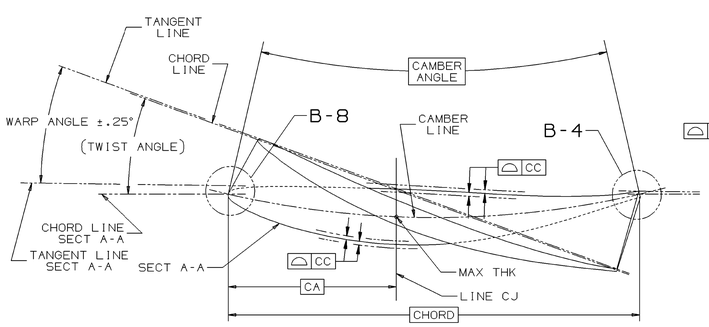

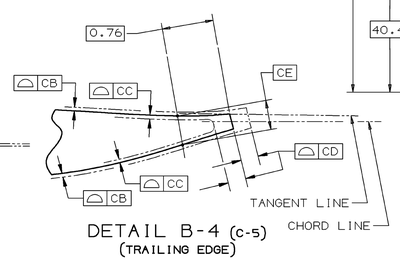

DETAIL B-4 (C-5)
(TRAILING EDGE)

SEE NOTES 9 & 10, ITEM 2

SECTION	SECTION HEIGHT FROM POINT "O"	CHORD	PERCENT THICKNESS	CAMBER ANGLE	TWIST ANGLE	WARP ANGLE ±.25	THICKNESS AT "CA"	CA	CB	CC	CD	CE	CF	NRT
A-A	0.000	59.436	342.900	24.6000	.0000	.0000	8.019	23.774	0.066	0.135	0.594	0.980	2.784	0.076
B-B	18.288	58.623	331.343	24.6000	.5000	.3840	7.643	23.449	0.064	0.127	0.587	0.935	2.672	0.076
C-C	54.864	57.023	308.204	24.6000	1.5500	1.2410	6.914	22.809	0.058	0.114	0.569	0.848	2.449	0.076
D-D	91.440	55.397	285.064	24.6000	2.7000	2.2480	6.213	22.159	0.051	0.104	0.554	0.765	2.233	0.076
E-E	134.112	53.518	258.064	24.6000	4.0500	3.4590	5.433	21.407	0.046	0.091	0.536	0.671	1.984	0.076
F-F	146.304	52.984	250.368	24.6000	4.4500	3.8270	5.220	21.194	0.043	0.086	0.531	0.645	1.915	0.076

03	P103	OMIT	11.91
02	P102	11.91	OMIT
01	P001	OMIT	OMIT
VAR	GE PT. NO.	ZK±0.13	ZL±0.13

MATING PART REFERENCE DATA	
POINT 'O' Ø	1893.42
CONE ANGLE	.000

7	COATING, ALUMINUM INORGANIC	P16A-AG3	
6	COATING, ALUMINUM INORGANIC	P16A-AG5	
5	ACPT REQT BLADES & VANES	P29A-AG900	GT10128
4	COMPR VANES PROCESSING	P3C-AG60	GT10083
3	X-Y COORDS	287A7837	GT10698
2	APPLICABLE DWG NOTES	314A5112	GT10459
1	APLD FRAC, GENL MACH	348A9200	GT10582
NOMENCLATURE		IDENT	BHELSPEC
LIST OF COMPLEMENTARY DOCUMENTS			

C	H-3	1
B	G-8	2
A	F-6	1
DATUM	ZONE	SHEET

THIRD ANGLE PROJECTION

GENERAL DIMENSIONAL LIMITS, FITS & TOLERANCES AS PER HY0230261

THE INFORMATION ON THIS DOCUMENT IS THE PROPERTY OF BHEL NOT BE USED DIRECTLY OR INDIRECTLY IN ANY WAY

COMPUTER FILE NAME: 0351299101GSOP400.TIF

REF DWG: 109E5113 REV C

SIGN. AND DATE

INVENTORY NO

REV.	DATE	ALTERED CHD/APPD	ZONE

TYPE OF PRODUCT OR

NAME OF CUSTOMER/PROJECT

	NAME	SIGN.	DATE	NO.OF VAR.
DRN.	SCS		06-12-06	NA
CHD.	AJAY		06-12-06	
APPD.	S.SRIRAM		06-12-06	

DEPT. GTD CODE 423 | UNTOL. DIMS. GR. B/M/F | SCALE NTS | WEIGHT (KG) 0.86 | REF. TO ASSY. DRG. 109E5113 | ITEM NO. NA | NO.OF ITEMS NA

TITLE: VANE STATOR STG 10

CARD CODE

DRAWING NO. 0-35129-91010 | REV. 00

SHT. No 01 | NO OF SHT. 01

THIRD ANGLE PROJECTION

(ALL DIMENSIONS ARE IN mm)

DRG. NO 0-35129-91016 | SH. 01 OF 01

NOTES:

1. FOR APPLICABLE DRAWING NOTES SEE ITEM 2.

DRAWING		PRECISION MASTER	
PT NO	REV	DWG NO	REV
1-12, 102-103	C	217X237	—

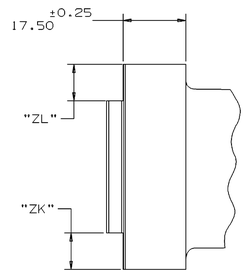

VIEW G-5 (G-4)

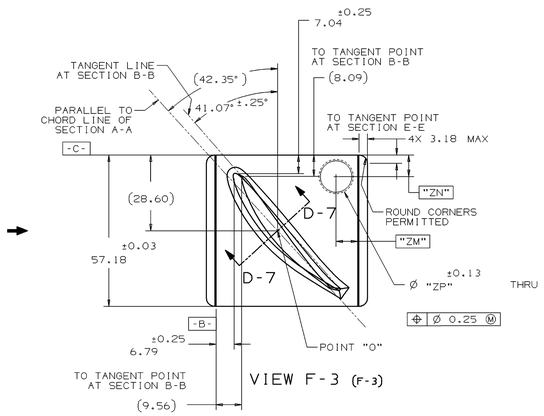

VIEW F-3 (F-3)

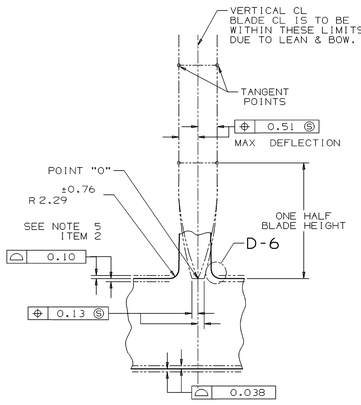

SECTION D-7 (G-3)

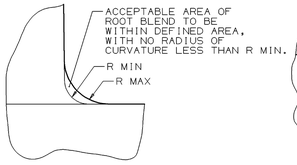

DETAIL D-6 (E-7)

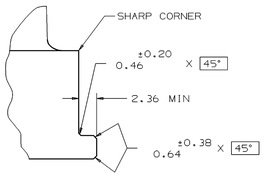

DETAIL D-5 (C-2)
(APPLIES TO BOTH SIDES OF BASE)

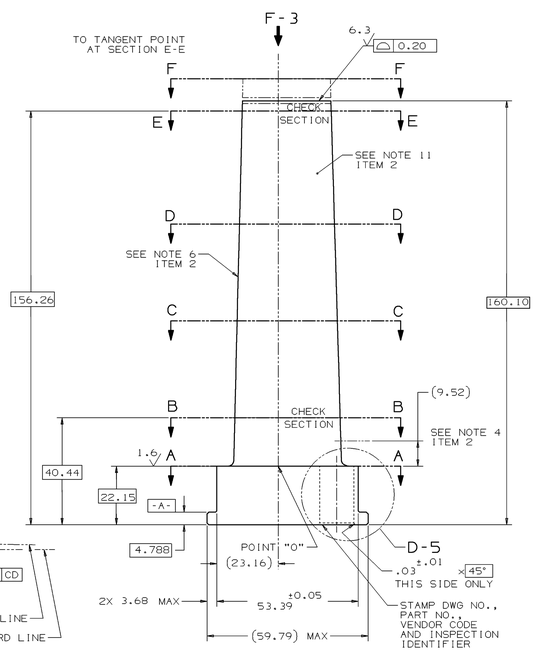

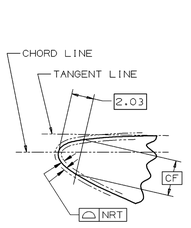

DETAIL B-8 (C-6)
(LEADING EDGE)

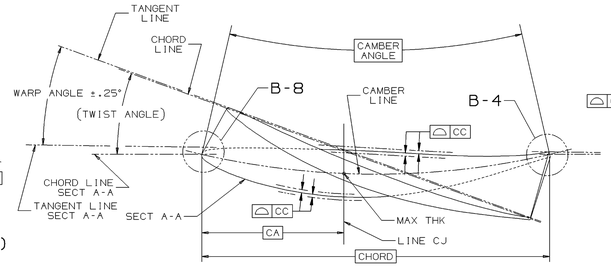

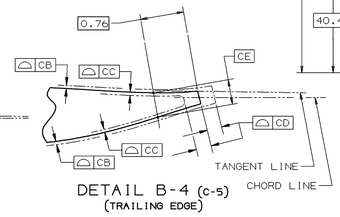

DETAIL B-4 (C-5)
(TRAILING EDGE)

SEE NOTES 9 & 10, ITEM 2

SECTION	SECTION HEIGHT FROM POINT "O"	CHORD	PERCENT THICKNESS	CAMBER ANGLE	TWIST ANGLE	WARP ANGLE ±.25	THICKNESS AT "CA"	CA	CB	CC	CD	CE	CF	NRT
A-A	0.000	59.436	342.900	24.6000	.0000	.0000	8.019	23.774	0.066	0.135	0.594	0.980	2.784	0.076
B-B	18.288	58.623	331.343	24.6000	.5000	.3840	7.643	23.449	0.064	0.127	0.587	0.935	2.672	0.076
C-C	54.864	57.023	308.204	24.6000	1.5500	1.2410	6.914	22.809	0.058	0.114	0.569	0.848	2.449	0,076
D-D	91.440	55.397	285.064	24.6000	2.7000	2.2480	6.213	22.159	0.051	0.104	0.554	0.765	2.233	0.076
E-E	134.112	53.518	258.064	24.6000	4.0500	3.4590	5.433	21.407	0.046	0.091	0.536	0.671	1.984	0.076
F-F	146.304	52.984	250.368	24.6000	4.4500	3.8270	5.220	21.194	0.043	0.086	0.531	0.645	1.915	0.076

04	P004	OMIT	OMIT	8.13	8.13	12.90
03	P103	OMIT	11.91	OMIT	OMIT	OMIT
02	P102	11.91	OMIT	OMIT	OMIT	OMIT
01	P001	OMIT	OMIT	OMIT	OMIT	OMIT
VAR	GE PT. NO.	ZK±0.13	ZL±0.13	ZM	ZN	ZP

MATING PART REFERENCE DATA	
POINT 'O' Ø	1893.42
CONE ANGLE	.000

7	COATING, ALUMINUM INORGANIC	P16A-AG3	
6	COATING, ALUMINUM INORGANIC	P16A-AG5	
5	ACPT REQT BLADES & VANES	P29A-AG900	GT10128
4	COMPR VANES PROCESSING	P3C-A660	GT10083
3	X-Y COORDS	287A7837	GT10698
2	APPLICABLE DWG NOTES	314A5112	GT10459
1	APLD PRAC, GENL MACH	348A9200	GT10582
	NOMENCLATURE	IDENT	BHELSPEC
LIST OF COMPLEMENTARY DOCUMENTS			

DATUM	ZONE	SHEET
C	H-3	1
B	G-8	2
A	F-6	1

THIRD ANGLE PROJECTION

GENERAL DIMENSIONAL LIMITS,FITS & TOLERANCES AS PER HY0230261

COMPUTER FILNAME: 0351290916.SOR-P100.TIF

DOC. NO. 109E5119 REV D

REF

SIGN. AND DATE

INVENTORY NO

TYPE OF PRODUCT OR

NAME OF CUSTOMER/PROJECT

	NAME	SIGN.	DATE	NO.OF VAR
DRN.	SCS		06-12-06	NA
CHD.	AJAY		06-12-06	
APPD.	S.SRIRAM		06-12-06	

DEPT. GTD CODE 423 | UNTOL. DIMS. GR. B/M/F | SCALE NTS | WEIGHT (KG) 0.82 | REF. TO ASSY. DRG. 109E5119 | ITEM NO. NA | NO.OF ITEMS NA

TITLE VANE STATOR STG 16

CARD CODE | DRAWING NO. 0-35129-91016 | REV. 00

SHT. No 01 | NO OF SHT. 01

REV.	DATE	ALTERED CHD/APPD
		ALTERED - CHD/APPD -

THIRD ANGLE PROJECTION

(ALL DIMENSIONS ARE IN mm)

DRG. NO. 0-353-05-61003 SH. 1 OF 1

NOTES:

1. FOR APPLICABLE DRAWING NOTES SEE ITEM 2.

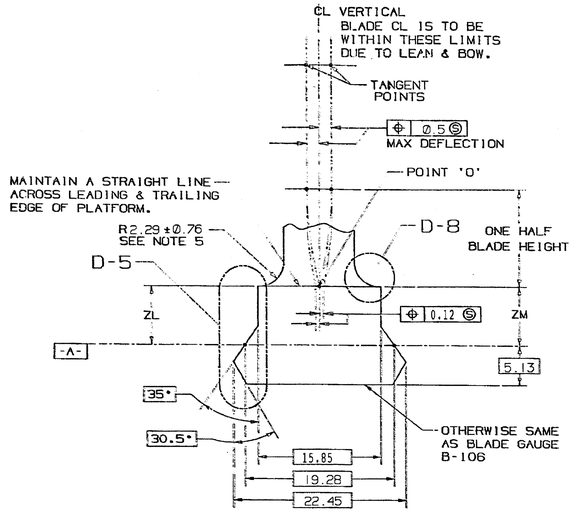

SECTIONS BA-BA, BB-BB & BC-BC (G-3)

SEE NOTE 6

SECTION	ZL ± 0.25	ZM ± 0.25
BA-BA	5.77	5.16
BB-BB	6.17	5.13
BC-BC	6.12	4.62

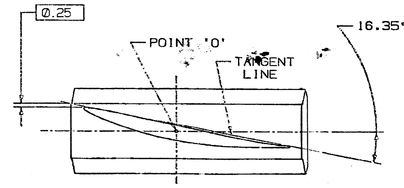

SECTION E-E (E-3)

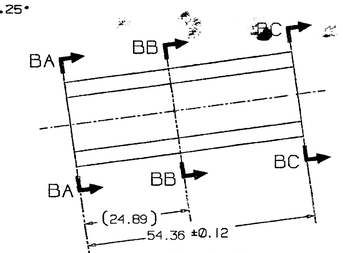

VIEW G-3 (F-3)
(AIRFOIL DELETED FOR CLARITY)

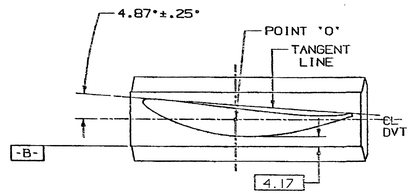

SECTION B-B (D-3)

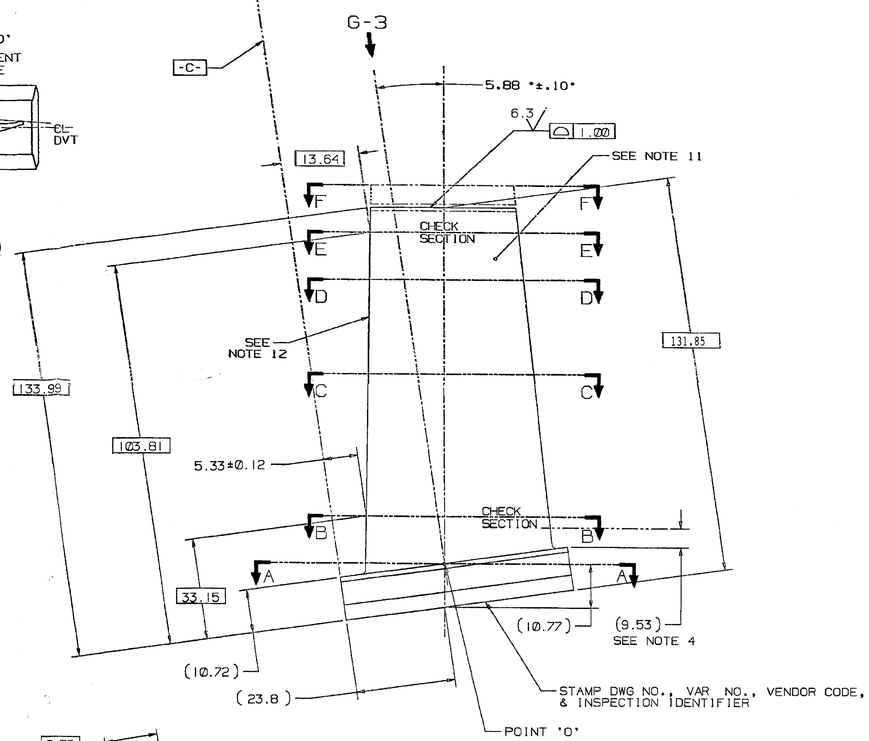

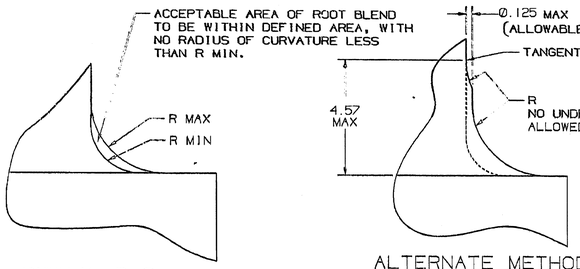

DETAIL D-8 (G-7)

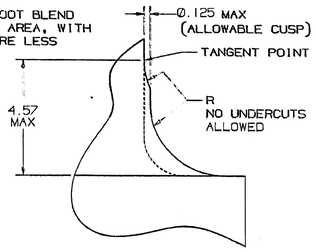

ALTERNATE METHOD OF MANUFACTURE
(REFER TO DETAIL D-8)

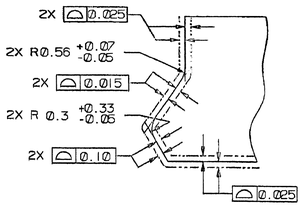

DETAIL D-5 (G-7)

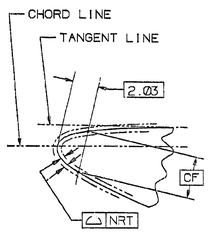

DETAIL B-8 (C-6)
(LEADING EDGE)

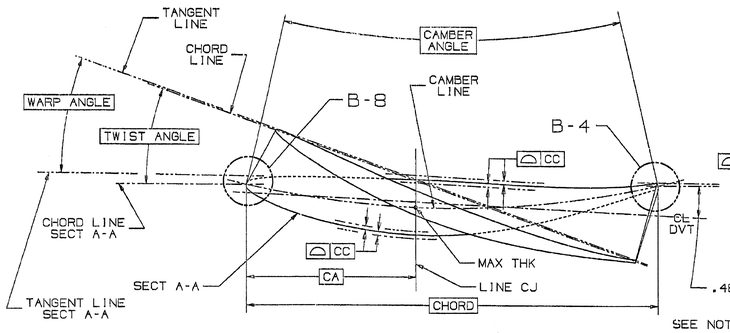

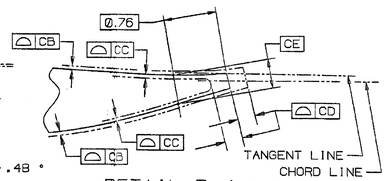

DETAIL B-4 (C-5)
(TRAILING EDGE)

SEE NOTES 9 & 10

SECTION	SECTION HEIGHT	CHORD	PERCENT THICKNESS	CAMBER ANGLE	TWIST ANGLE	WARP ANGLE	THICKNESS AT 'CA'	CA	CB	CC	CD	CE	CF	NRT
A-A	0.000	48.26	13.500	30.750	.000	.000	6.51	19.3	0.053	0.109	0.48	0.813	2.49	0.076
B-B	20.32	48.26	12.400	27.071	4.841	4.867	5.98	19.3	0.051	0.099	0.48	0.747	2.29	0.076
C-C	50.80	48.26	10.700	23.000	10.698	10.684	5.16	19.3	0.043	0.086	0.48	0.645	1.98	0.076
D-D	78.74	48.26	9.100	19.750	14.804	14.705	4.40	19.3	0.038	0.076	0.48	0.569	1.69	0.076
E-E	91.44	48.26	8.500	18.500	16.463	16.319	4.12	19.3	0.038	0.076	0.48	0.564	1.58	0.076
F-F	111.76	48.26	7.300	17.000	18.845	18.565	3.57	19.3	0.038	0.076	0.48	0.556	1.36	0.076

-C-	F-4	1
-B-	F-6	1
-A-	F-8	1
DATUM	ZONE	SHEET

MATL HY10996 (C450) OWSA VAR 01	-	10
COAT PER ITEM 7 OWSA VAR 01	P3	03
COAT PER ITEM 6 OWSA VAR 01	P2	02
MATL HY10988 (AISI 403 Cb)	P1	01
DESCRIPTION	REF	VAR

MATING PART REFERENCE DATA	
POINT 'O' Ø	894.79
RIM ANGLE	6.767
DOVETAIL ANGLE	56.900

7	COATING, ALUMINUM-INORGANIC	P16A-A63	GT10125
6	COATING, ALUMINUM-INORGANIC	P16A-A65	GT10606
5	ACPT REQT-BLADES & VANES	P29A-A6900	GT10128
4	COMPR VANES-PROCESSING	P3C-A660	GT10083
3	X-Y COORDS (217X368)	324A5243	GT10134
2	APPLICABLE DWG NOTES	314A5112	GT10607
1	APPLIED PRACTICES	348A6200	HY0230261
IT.	NOMENCLATURE	IDENT	STOCK
LIST OF COMPLEMENTARY DOCUMENTS			

TYPE OF PRODUCT OR NAME OF CUSTOMER/PROJECT: GASTURBINE Fr-6

	NAME	SIGN.	DATE	NO. OF VAR.
DRN.	SCS		24-3-99	NA
CHK.	RS		24-3-99	
APPD.	KMM		24-3-99	

DEPT. CODE	UNIT	DIMS. GR.	SCALE	WEIGHT (KG)	REF. TO ASSY. DRG.	ITEM NO.	NO. OF ITEMS
423	GTD	C/W/F	NTS	0.23	NA	NA	NA

TITLE: BLADE, ROTOR-STG 6

CARD CODE: NA

DRAWING NO. 0-353-05-61003 REV. 00

SHT. No. 1 NO OF SHT. 1

REV.	DATE	ALTERED	CHD/APPD	ZONE

THE INFORMATION ON THIS DOCUMENT IS THE PROPERTY OF IT MUST NOT BE USED DIRECTLY OR INDIRECTLY IN ANY WAY DETRIMENTAL TO THE INTEREST OF THE COMPANY

GENERAL DIMENSIONAL LIMITS, FITS & TOLERANCES AS PER HY0230261

COMPUTER FILE NAME 03056031.TIF

REF. DWG. NO. 10985175 REV "-"

SIGN. AND DATE

INVENTORY NO

THIRD ANGLE PROJECTION

(ALL DIMENSIONS ARE IN mm)

DRG. NO. 0-353-05-61007 SH. 1 OF 1

NOTES:

1. FOR APPLICABLE DRAWING NOTES SEE ITEM 2.

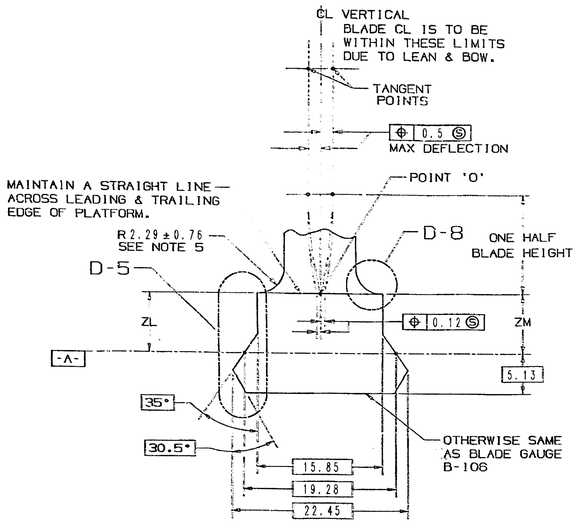

SECTIONS BA-BA, BB-BB & BC-BC (G-3)

SEE NOTE 6

SECTION	ZL ± 0.25	ZM ± 0.25
BA-BA	5.56	5.94
BB-BB	5.97	5.97
BC-BC	5.89	5.44

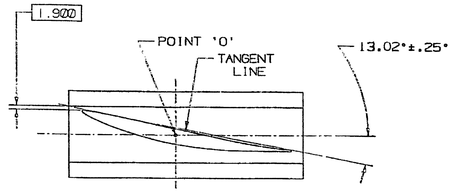

SECTION XG-XG (E-3)

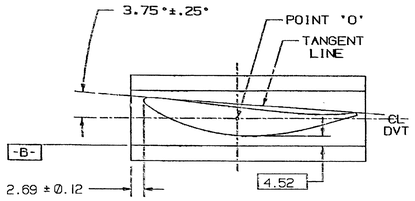

SECTION G-G (D-3)

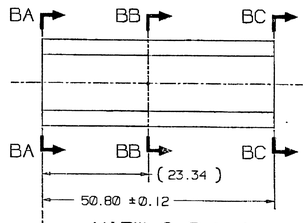

VIEW G-3 (F-3)
(AIRFOIL DELETED FOR CLARITY)

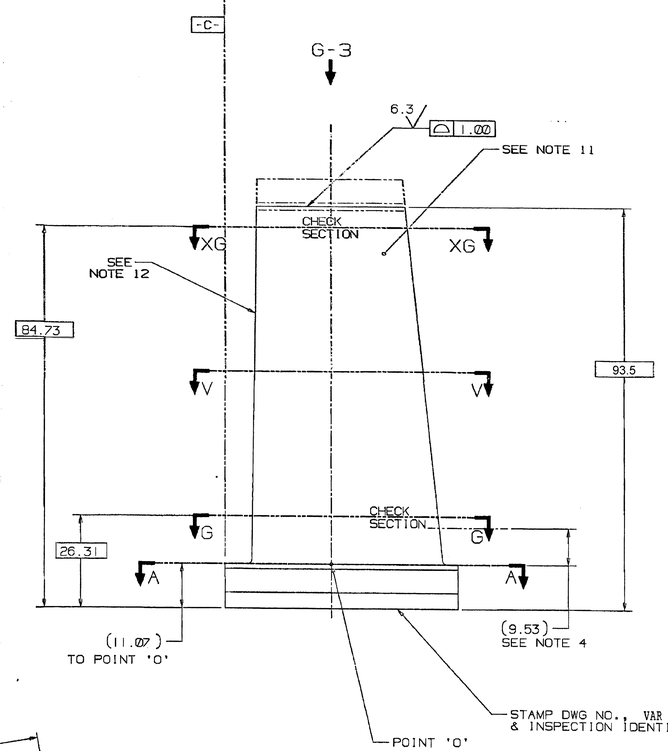

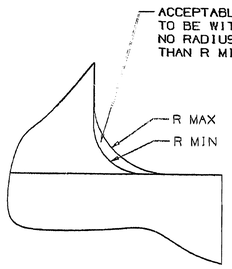

DETAIL D-8 (G-7)

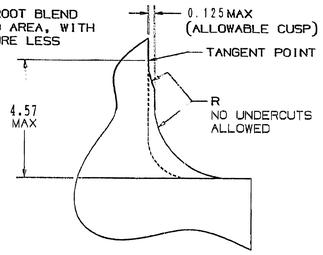

ALTERNATE METHOD OF MANUFACTURE
(REFER TO DETAIL D-8)

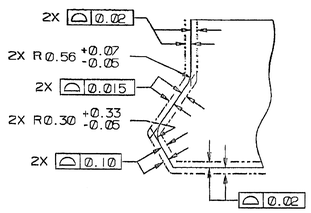

DETAIL D-5 (G-7)

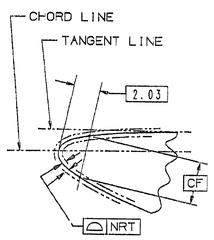

DETAIL B-8 (C-6)
(LEADING EDGE)

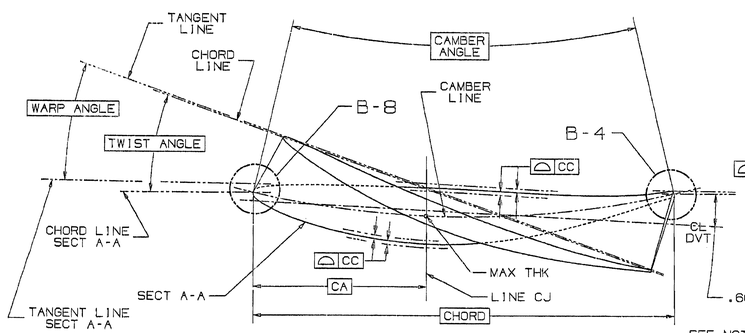

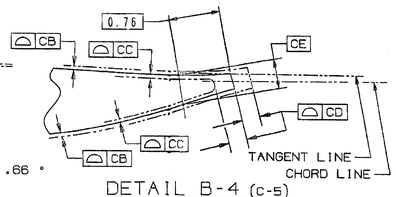

DETAIL B-4 (C-5)
(TRAILING EDGE)

SEE NOTES 9 & 10

SECTION	SECTION HEIGHT	CHORD	PERCENT THICKNESS	CAMBER ANGLE	TWIST ANGLE	WARP ANGLE	THICKNESS AT 'CA'	CA	CB	CC	CD	CE	CF	NRT
A-A	0.00	45.72	13.500	27.400	.000	.000	6.167	18.288	0.051	0.104	0.457	0.775	2.426	0.076
G-G	15.24	45.72	12.200	24.600	3.792	3.750	5.573	18.288	0.046	0.094	0.457	0.701	2.197	0.076
V-V	45.72	45.72	9.700	20.000	9.388	9.191	4.437	18.288	0.038	0.076	0.457	0.574	1.755	0.076
XG-XG	73.66	45.72	7.400	16.800	13.471	13.018	3.434	18.288	0.038	0.076	0.457	0.556	1.346	0.076

-C-	F-4	1
-B-	F-8	1
-A-	F-8	1
DATUM	ZONE	SHEET

MATL HY10996 (C450) OWSA VAR 01	-	10
COAT PER ITEM 7 OWSA VAR 01	P3	03
COAT PER ITEM 6 OWSA VAR 01	P2	02
MATL HY10988 (AISI 403 Cb)	P1	01
DESCRIPTION	REF	VAR

MATING PART REFERENCE DATA	
POINT 'O' Ø	948.44
RIM ANGLE	0.000
DOVETAIL ANGLE	50.429

7	COATING, ALUMINUM-INORGANIC	P16A-A93	GT10125
6	COATING, ALUMINUM-INORGANIC	P16A-A95	GT10506
5	ACPT REOT-BLADES & VANES	P29A-A9900	GT10128
4	COMPR VANES-PROCESSING	P3C-A980	GT10083
3	X-Y COORDS (217X339)	342A109	GT10353
2	APPLICABLE DWG NOTES	314A5112	GT10607
1	APPLIED PRACTICES	346A9200	HY0230261
IT.	NOMENCLATURE	IDENT	SPECN
LIST OF COMPLEMENTARY DOCUMENTS			

THE INFORMATION ON THIS DOCUMENT IS THE PROPERTY OF MUST NOT BE USED DIRECTLY OR INDIRECTLY IN ANY WAY DETRIMENTAL TO THE INTEREST OF THE COMPANY

GENERAL DIMENSIONAL LIMITS, FITS & TOLERANCES AS PER HY0230261

SIGN. AND DATE | REF. DRG. NO. 10995179 REV -' | COMPUTER FILE NAME 03056071.TIF

INVITATION NO.

REV.	DATE	ALTERED	CHD/APPD	ZONE
01	1.12.05	ALTERED NVS CHD/APPD SSR	DIM 93.5 WAS 95.25 DCA:GT1665	E-2

TYPE OF PRODUCT OR NAME OF CUSTOMER/PROJECT: GASTURBINE Fr-6

	NAME	SIGN.	DATE	NO. OF VAR.
DRN.	SCS		24-3-99	A
CHD.	RS		24-3-99	NA
APPD.	KMM		24-3-99	

DEPT. GTD | UNTOL. DIMS. GR. C/W/F | SCALE NTS | WEIGHT (KG) 0.18 | REF. TO ASSY. DRG. NA | ITEM NO. NA | NO. OF ITEMS NA

CODE 423

TITLE: BLADE, ROTOR-STG10-13

CARD CODE NA | DRAWING NO. 0-353-05-61007 | REV. 01 | SHT. No 1 | NO OF SHT. 1

THIRD ANGLE PROJECTION

(ALL DIMENSIONS ARE IN MM)

DRG. NO. 0-353-05-61008 SH. 1 OF 1

NOTES:

1. FOR APPLICABLE DRAWING NOTES SEE ITEM 2.

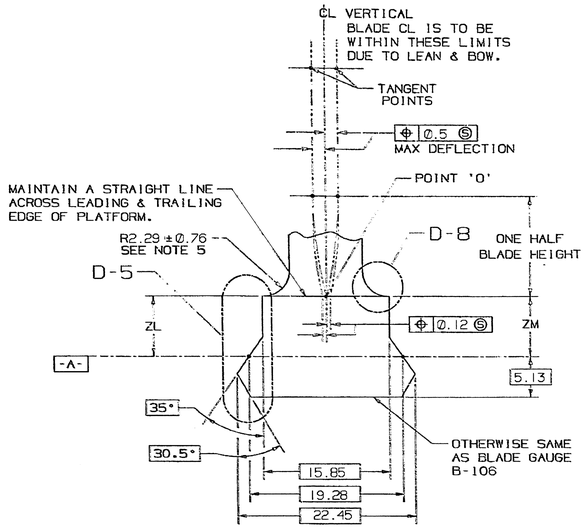

SECTIONS BA-BA, BB-BB & BC-BC (G-3)

SEE NOTE 6

SECTION	ZL ±0.25	ZM ±0.25
BA-BA	6.12	6.55
BB-BB	6.71	6.71
BC-BC	6.45	5.94

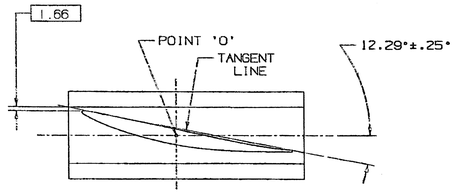

SECTION XG-XG (E-3)

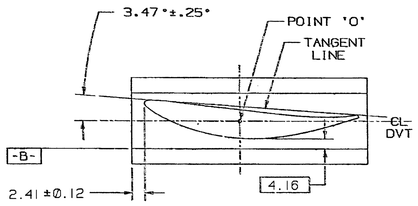

SECTION G-G (D-3)

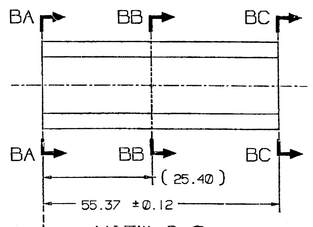

VIEW G-3 (F-3)
(AIRFOIL DELETED FOR CLARITY)

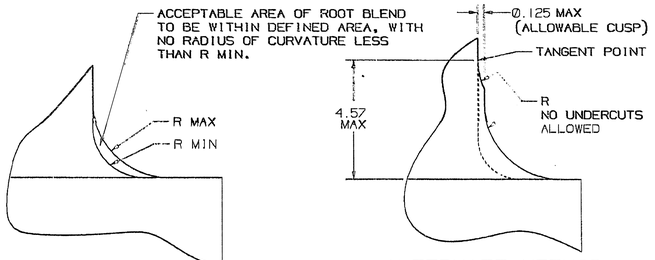

DETAIL D-8 (G-7)

ALTERNATE METHOD OF MANUFACTURE
(REFER TO DETAIL D-8)

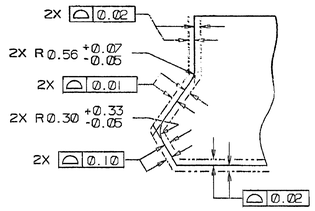

DETAIL D-5 (G-7)

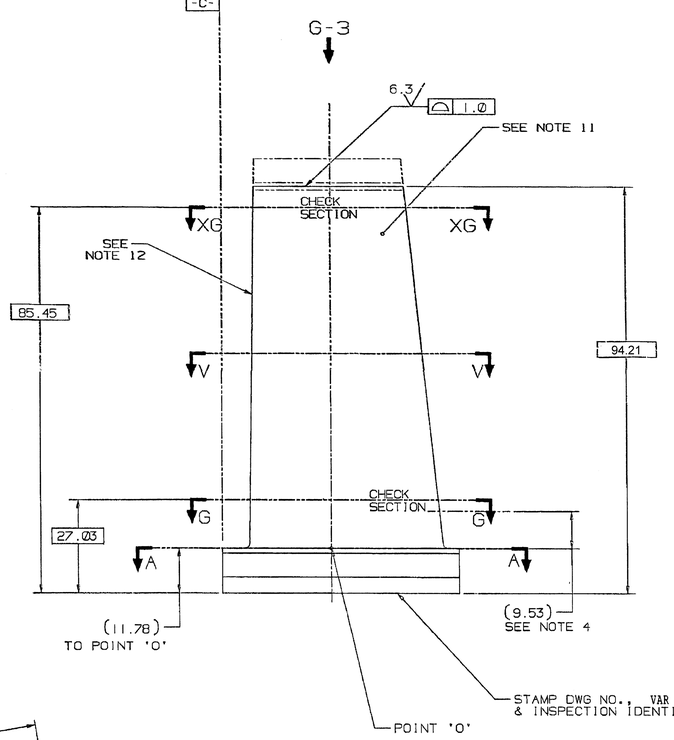

-C-	F-4	1
-B-	F-8	1
-A-	F-8	1
DATUM	ZONE	SHEET

MATL HY10996 (C450) OMSA VAR 01	-	10
COAT PER ITEM 7 OMSA VAR 01	P3	03
COAT PER ITEM 6 OMSA VAR 01	P2	02
MATL HY10988 (AISI 403 Cb)	P1	01
DESCRIPTION	REF	VAR

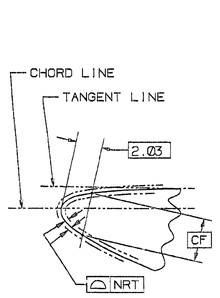

DETAIL B-8 (C-6)
(LEADING EDGE)

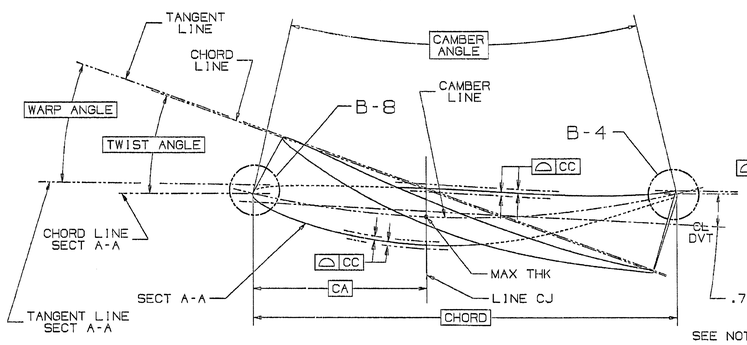

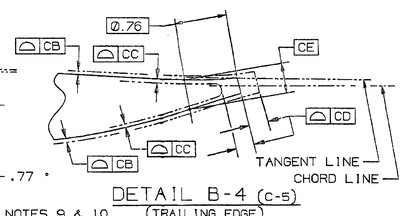

DETAIL B-4 (C-5)
(TRAILING EDGE)

SEE NOTES 9 & 10

SECTION	SECTION HEIGHT	CHORD	PERCENT THICKNESS	CAMBER ANGLE	TWIST ANGLE	WARP ANGLE	THICKNESS AT 'CA'	CA	CB	CC	CD	CE	CF	NRT
A-A	0.00	50.80	13.500	26.000	.000	.000	6.853	20.320	0.056	0.114	0.508	0.851	2.563	0.076
G-G	15.24	50.80	12.300	23.100	3.474	3.466	6.243	20.320	0.051	0.104	0.508	0.775	2.342	0.076
V-V	45.72	50.80	9.800	18.400	9.371	9.217	4.976	20.320	0.041	0.084	0.508	0.620	1.872	0.076
XG-XG	73.66	50.80	7.500	15.400	12.731	12.286	3.840	20.320	0.038	0.076	0.508	0.556	1.437	0.076

MATING PART REFERENCE DATA	
POINT 'O' Ø	948.44
RIM ANGLE	0.000
DOVETAIL ANGLE	43.183

7	COATING, ALUMINUM-INORGANIC	P16A-A33	GT 01 25
6	COATING, ALUMINUM-INORGANIC	P16A-A35	GT 01 06
5	ACPT REQT-BLADES & VANES	P29A-A39CO	GT 01 26
4	COMPR VANES-PROCESSING	P3C-AG60	GT 00 33
3	X-Y COORDS (217X340)	342A1110	GT10352
2	APPLICABLE DWG NOTES	314A5112	GT 06 07
1	APPLIED PRACTICES	348A9200	HY0230.61
IT.	NOMENCLATURE	IDENT	SPECN
LIST OF COMPLEMENTARY DOCUMENTS			

GENERAL DIMENSIONAL LIMITS, FITS & TOLERANCES AS PER HY0230261

COMPUTER PART NUMBER 03056081.TIF

REF DWG NO. 10985180 REV '-'

SCH. AND DATE

INVENTORY NO

TYPE OF PRODUCT OR NAME OF CUSTOMER/PROJECT: GASTURBINE Fr-6.

	NAME	SIGN.	DATE	NO. OF VAR.
DRN.	SCS		24-1-95	
CHK.	BS		24-1-95	NA
APPD.	RMN		24-1-95	

DEPT.	UNIT. DIMS.	SCALE	WEIGHT (KG)	REF. TO ASSY. DRG.	ITEM NO.	NO. OF ITEMS
GTD 423	GR. C/W/F	NTS	0.23	NA	NA	

TITLE: BLADE, ROTOR-STG 14-16

CARD CODE: NA

DRAWING NO. 0-353-05-61008 REV. 01

SHT. No. 1 NO OF SHT. 1

REV.	DATE	ALTERED	CHD/APPD
01	1.12.05	DIM 94.21 WAS 96 DCA:GT1665	CHD/APPD SSR

ZONE E-2

THIRD ANGLE PROJECTION

(ALL DIMENSIONS ARE IN mm)

DRG. NO. 0-353-05-61015 SH. 1 OF 1

NOTES:

1. FOR APPLICABLE DRAWING NOTES SEE ITEM 2.

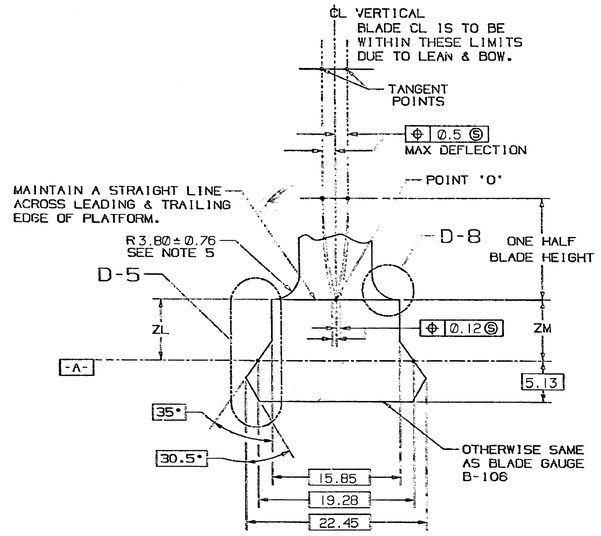

SECTIONS BA-BA, BB-BB & BC-BC (G-3)

SEE NOTE 6

SECTION	ZL ±0.25	ZM ± 0.25
BA-BA	5.23	4.88
BB-BB	5.64	4.80
BC-BC	5.54	4.14

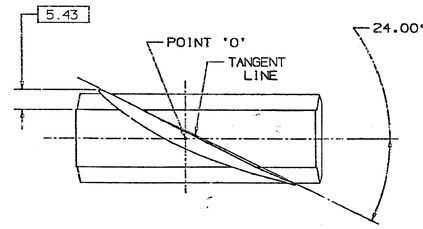

SECTION D-D (E-3)

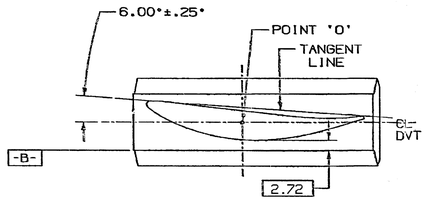

SECTION B-B (D-3)

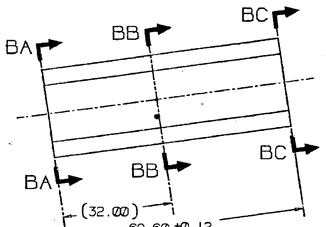

VIEW G-3 (F-3)
(AIRFOIL DELETED FOR CLARITY)

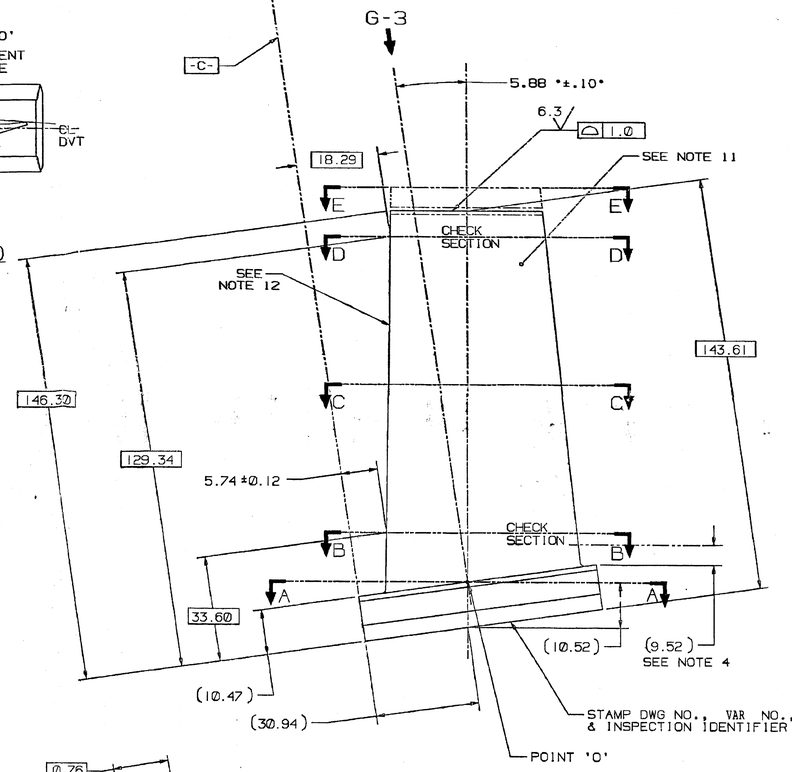

-C-	F-4	1
-B-	F-R	1
-A-	F-8	1
DATUM	ZONE	SHEET

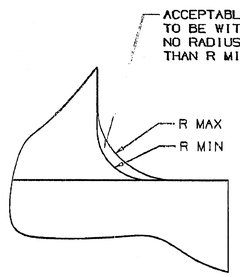

DETAIL D-8 (G-7)

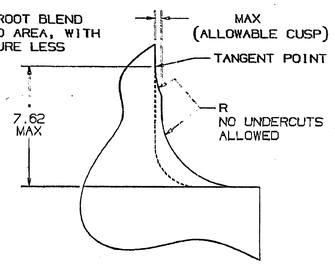

ALTERNATE METHOD OF MANUFACTURE
(REFER TO DETAIL D-8)

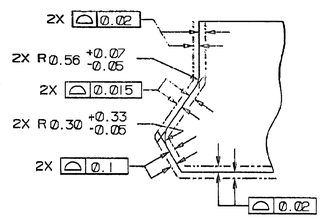

DETAIL D-5 (G-7)

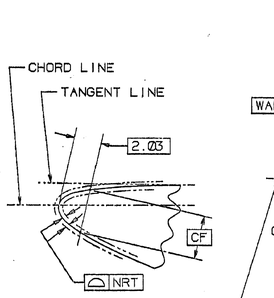

DETAIL B-8 (C-6)
(LEADING EDGE)

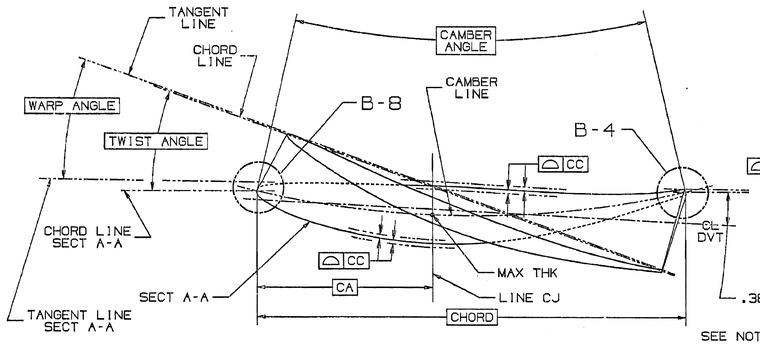

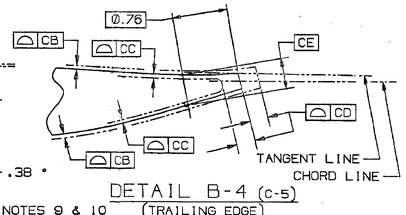

DETAIL B-4 (C-5)
(TRAILING EDGE)

SEE NOTES 9 & 10

SECTION	SECTION HEIGHT	CHORD	PERCENT THICKNESS	CAMBER ANGLE	TWIST ANGLE	WARP ANGLE	THICKNESS AT 'CA'	CA	CB	CC	CD	CE	CF	NRT
A-A	0.00	63.5	13.500	33.250	.000	.000	8.565	25.400	0.071	0.142	0.635	1.039	2.860	0.079
B-B	20.32	63.5	12.600	29.500	5.959	6.000	7.996	25.400	0.066	0.135	0.635	0.970	2.700	0.076
C-C	76.20	63.5	10.000	21.500	17.642	17.700	6.345	25.400	0.053	0.107	0.635	0.772	2.141	0.076
D-D	116.84	63.5	8.700	17.000	23.886	24.000	5.519	25.400	0.046	0.091	0.635	0.671	1.869	0.076
E-E	137.16	63.5	7.200	15.200	26.892	26.650	4.569	25.400	0.038	0.076	0.635	0.556	1.547	0.076

MATL HY10996 (C450)OWSA VAR 01	- 10
COAT PER ITEM 7 OWSA VAR 01	P3 03
COAT PER ITEM 6 -OWSA VAR 01	P2 02
MATL HY10988 (AISI 403 CD)	P1 01
DESCRIPTION	REF VAR

MATING PART REFERENCE DATA	
POINT 'O' Ø	847.04
RIM ANGLE	6.767
DOVETAIL ANGLE	63.900

7	COATING, ALUMINUM-INORGANIC	P16A-A63	GT10125
6	COATING, ALUMINUM-INORGANIC	P16A-A65	GT10606
5	ACPT REQT-BLADES & VANES	P29A-A6900	GT10128
4	COMPR VANES-PROCESSING	P3C-A680	GT10083
3	X-Y COORDS (217X367)	324A5242	GT10358
2	APPLICABLE DWG NOTES	314A5112	GT10607
1	APPLIED PRACTICES	348A9200	HY0230261
IT.	NOMENCLATURE	IDENT	SPCEN

LIST OF COMPLEMENTARY DOCUMENTS

GENERAL DIMENSIONAL LIMITS, FITS & TOLERANCES AS PER HY0230261

REV.	DATE	ALTERED	ZONE
		CHD/APPD	

TYPE OF PRODUCT OR NAME OF CUSTOMER/PROJECT: GAS TURBINE FR-6

	NAME	SIGN.	DATE	NO. OF VAR.
DRN.	SCS		24-3-99	
CHD.	RS		24-3-99	NA
APPD.	KMM		24-3-99	

DEPT. CODE	UNTOL. DIMS. OR C/W/F	SCALE	WEIGHT (KG)	REF. TO ASSY. DRG.	ITEM NO.	NO. OF ITEMS
423		NTS	0.41	NA	NA	NA

TITLE: BLADE, ROTOR-STG 5

CARD CODE: NA

DRAWING NO. 0-353-05-61015 REV. 00

SHT. No 1 NO OF SHT. 1

FIRST ANGLE PROJECTION

(ALL DIMENSIONS ARE IN mm)

DRG. NO 1-10102-41008

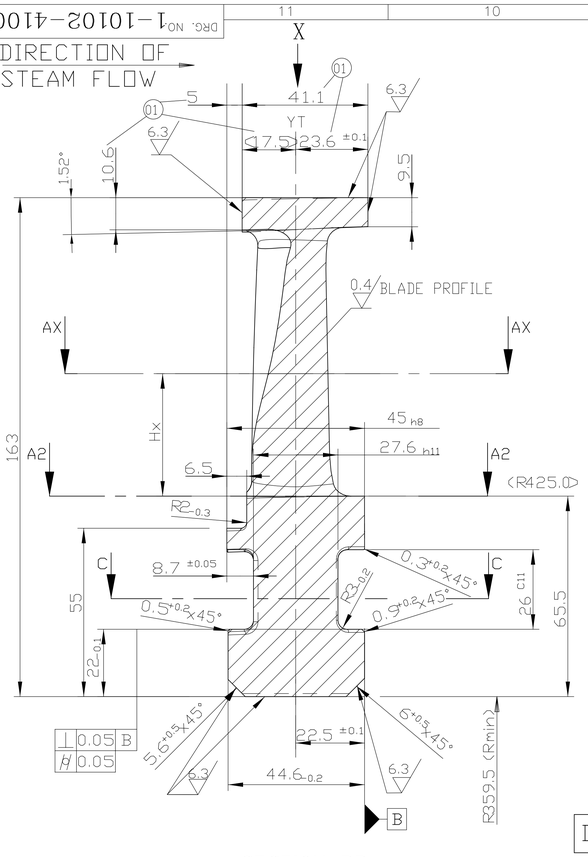

SECTION BB

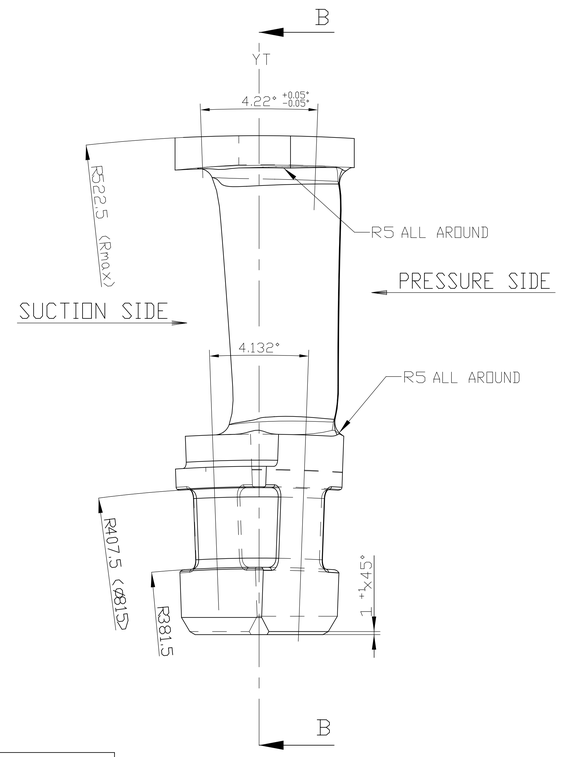

DESIGN: VAR 01 "L"

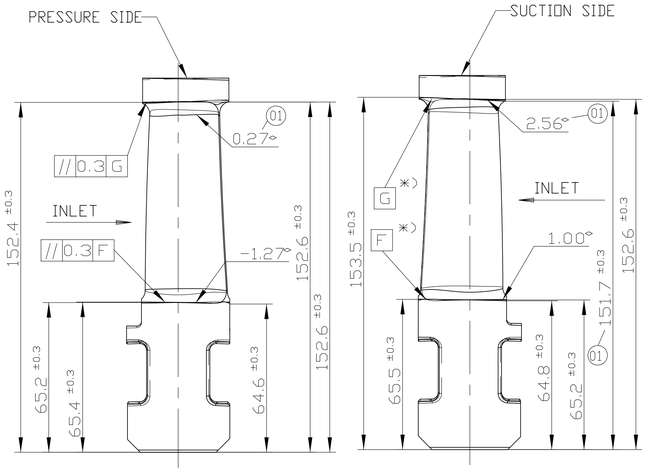

SCHEME FOR S & D DIMENSIONS

*) REFERRED TO ADJECENT BLADES

3.2 ALL OVER EXCEPT OTHERWISE STATED

L "LEFT" AS SHOWN

R "RIGHT" MIRROR INVERTED

DESIGN: VAR 01 "L"

DESIGN: VAR 02 "R"

BLADE SEEN IN THE DIRECTION OF STEAM FLOW

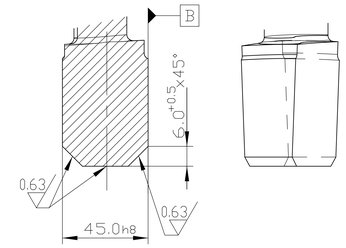

LOCKING BLADE

DESIGN: VAR 03 "L"

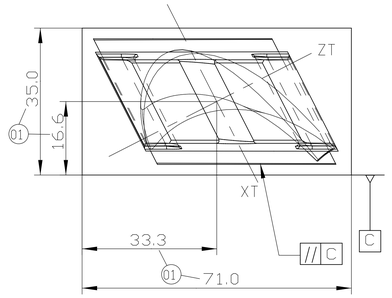

CENTRE DISTANCES IN SEMI FINISHED CONDITION

DESIGN: VAR 02 "R"

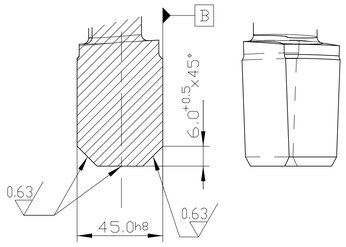

LOCKING BLADE

DESIGN: VAR 04 "R"

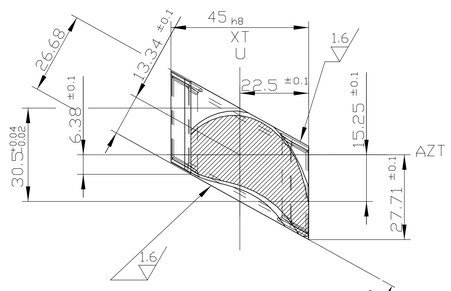

ALL DIMENSIONS REFERRED TO SECTION A2A2 (R425.0)

SECTION A2A2

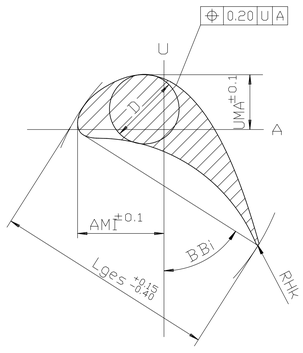

SECTION AX	Hx	Lges	AMI	UMA	RHk	BBi	D
A1 - A1	-10.0	44.46	14.39	16.49	0.23	56.72	15.30
A2 - A2	0.0	44.58	14.37	11.13	0.23	56.30	14.80
A5 - A5	9.0	44.76	14.36	8.58	0.24	55.18	14.37
A17-A17	45.0	46.27	13.76	10.64	0.25	46.86	12.59
A28-A28	78.0	49.02	12.56	13.53	0.27	39.89	10.82

LOCAL SMALLEST RADIUS OF CURVATURE ON PRESSURE SIDE: 25.9 MM

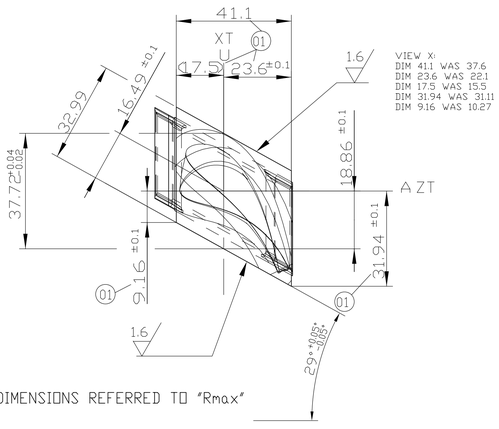

ALL DIMENSIONS REFERRED TO "Rmax"

VIEW X

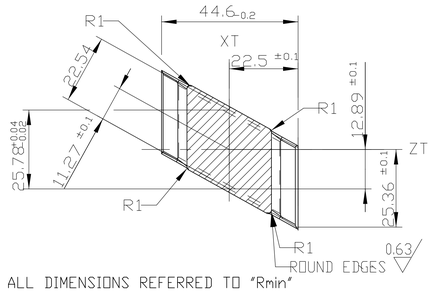

ALL DIMENSIONS REFERRED TO "Rmin"

SECTION CC

TOLERANCE TABLE

NOMINAL SIZE mm		TOLERANCE RANGE		
		h11	C11	h8
ABOVE	UP TO	UPPER / LOWER	UPPER / LOWER	UPPER / LOWER
18	30	0 / -0. 130	+0. 240 / +0. 110	0 / -0. 033
30	40	0 / -0. 160	+0. 280 / +0. 120	0 / -0. 039
40	50	0 / -0. 160	+0. 290 / +0. 130	0 / -0. 039

TECHNICAL REQUIREMENTS:

1. TOLERANCES:
   - 0.20 PROFILE FORM
   - ± 0.20 PROFILE THICKNESS
   - ± 0.30 PROFILE ANGLE
2. STRAK NUMBER: 25108
3. NUMBER OF BLADES /ROW: 88
   (INCLUDING LOCKING BLADE)

~~GMS No.~~ / C.B.O.M.- NO. 01010241000			STATUS OF DRG U
AGREED DEPT	NAME	SIGN	DATE
TBM	A. M.	Sd/-	28.07.03

GRADE OF UNTOL.DIM

M/CG.-¢/M/# AA0230208

WELDING-#/B/¢/D AA0621104

GAS CUTTING-'T3'AA0621101

REV	DATE	ALTERED / CHECKED

REV	DATE	ALTERED / CHECKED

REV	DATE	ALTERED SK GARG sd/- / CHECKED PK BANSALsd/-
01	09.09.2005	DIMENSIONS IN SECTION BB, S&D VIEW, SEMIFINISHED CONDITION, AND VIEW X ARE REVISED AS PER CHANGE ADVICE (STE-05-F0192)

TYPE OF PRODUCT OR NAME OF CUSTOMER/PROJECT: STEAM TURBINE

BHARAT HEAVY ELECTRICALS LTD. RANIPUR, HARDWAR

	NAME	SIGN	DATE
DRN	SK GARG	Sd/-	08.06.02
CHD	SK GARG	Sd/-	18.03.03
APPD	TK GHOSH	Sd/-	18.11.03

NO. OF VAR

DEPT STE

CODE 4011

SCALE NTS

WEIGHT (KG) 0.905

REF. TO ASSY. DRG. 01010241000

ITEM No. —

NO. OF ITEMS —

TITLE : MOVING BLADE ST 8 S508-R45-TR163.0/088.0A2S

CARD CODE

DRAWING NO. 1-10102-41008

SHEET No. 01 No. OF SHEETS 01

A1 SIZE

THE INFORMATION ON THIS DOCUMENT IS THE PROPERTY OF BHARAT HEAVY ELECTRICALS LIMITED. IT MUST NOT BE USED DIRECTLY OR INDIRECTLY IN ANY WAY DETRIMENTAL TO THE INTREST OF THE COMPAY

INVENTORY NO | SIGN. AND DATE | REF. DRG. NO.

FIRST ANGLE PROJECTION

(ALL DIMENSIONS ARE IN mm)

DRG. NO 1-105-18-62001 SH.01 OF 01

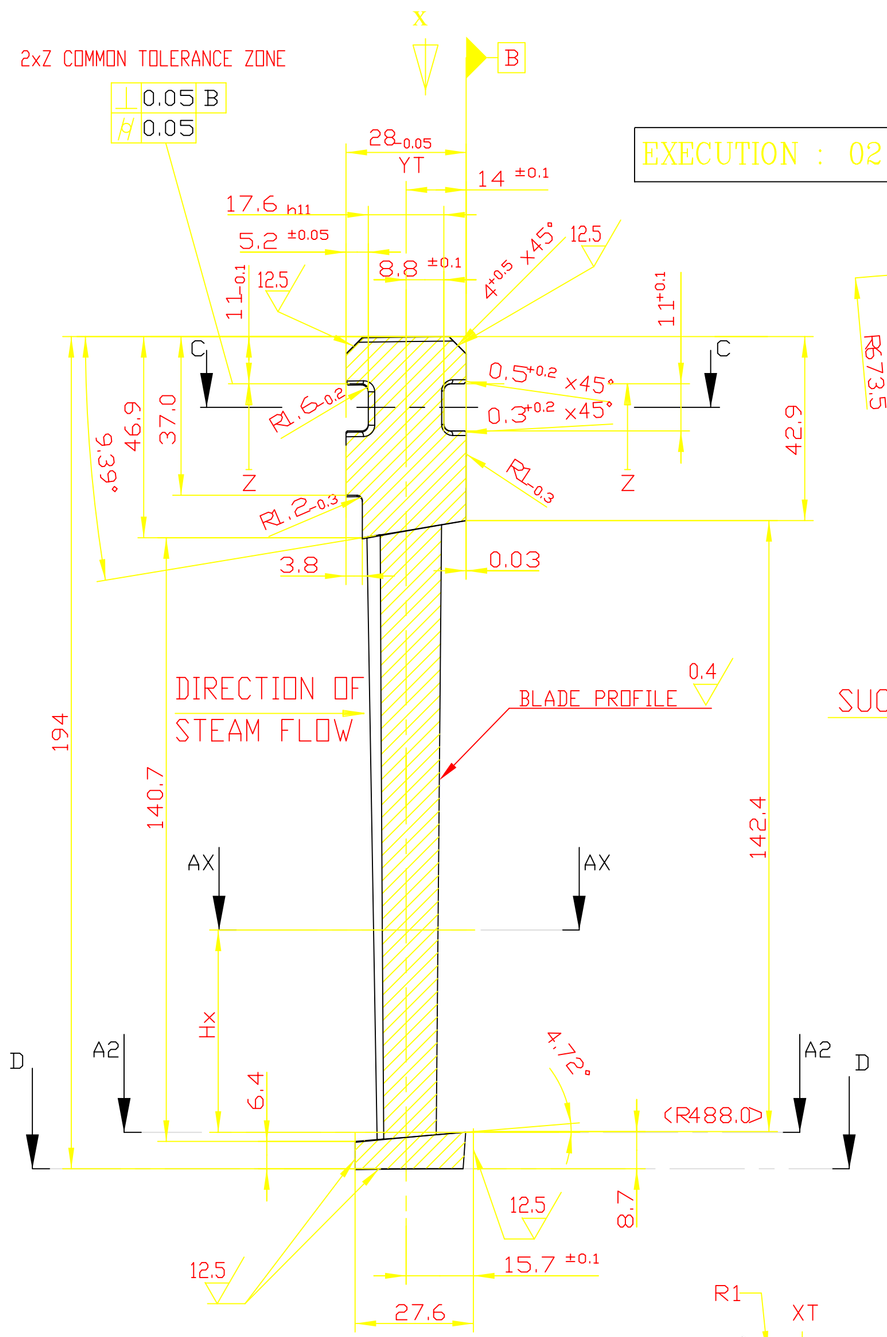

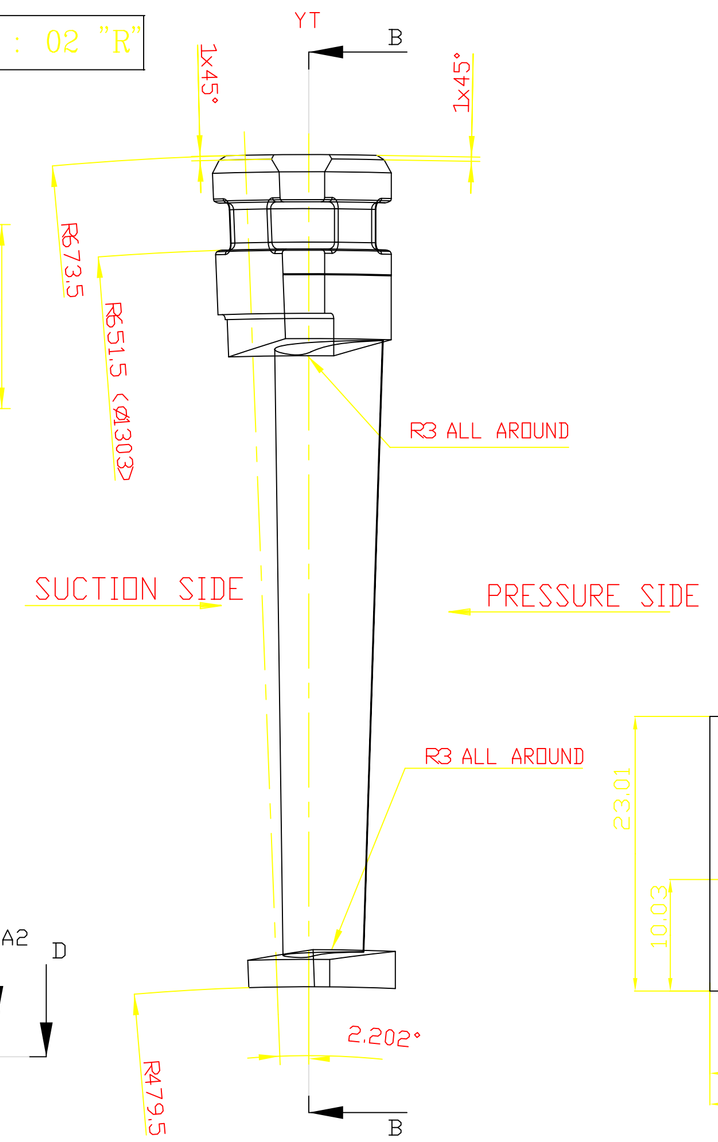

SCHEME FOR S & D DIMENSIONS

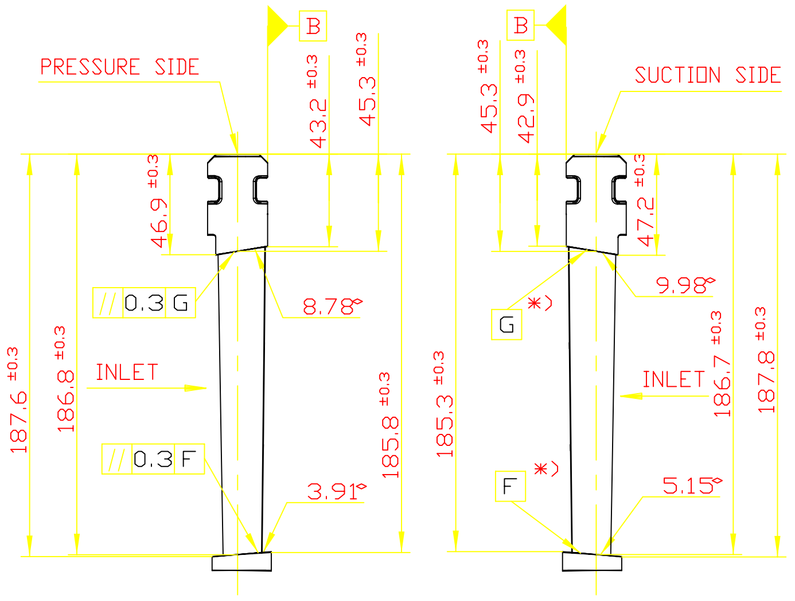

BLADE SEEN IN STEAM FLOW DIRECTION

EXECUTION : 00 "L"

L

"LEFT" MIRROR INVERTED

EXECUTION : 02 "R"

R

"RIGHT" AS SHOWN

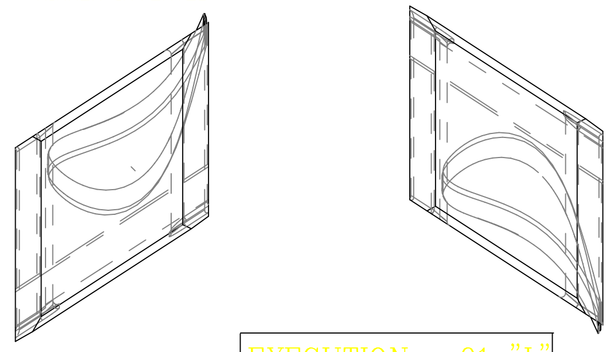

EXECUTION : 01 "L"

GUIDE BLADES AT JOINT PALNE (2 NO.) MADE BY REWORKING ON DESIGN: VAR 01 "L"

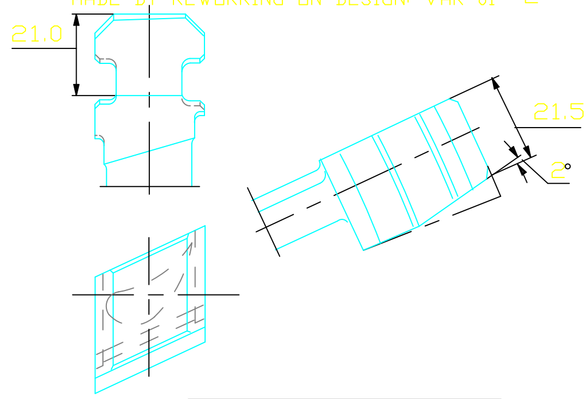

EXECUTION : 03 "R"

GUIDE BLADES AT JOINT PALNE (2 NO.) MADE BY REWORKING ON DESIGN: VAR 02 "R"

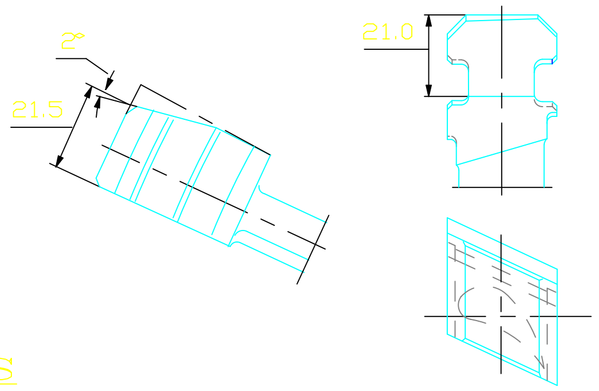

CENTRE DISTANCES IN SEMI FINISHED CONDITION

EXECUTION : 02 "R"

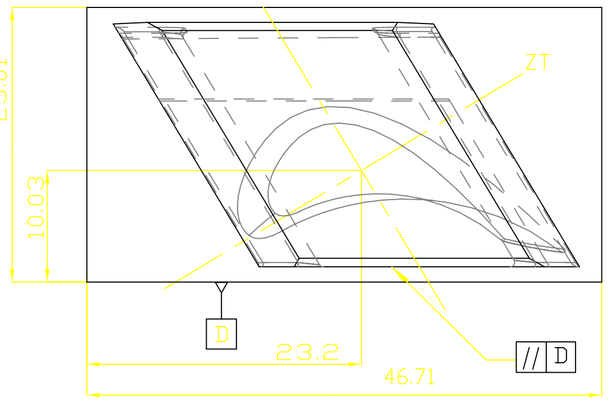

EXECUTION : 00 "L"

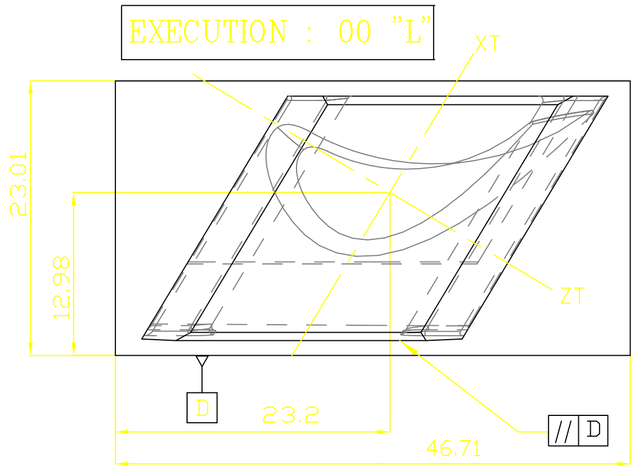

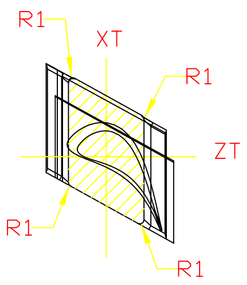

SECTION C-C

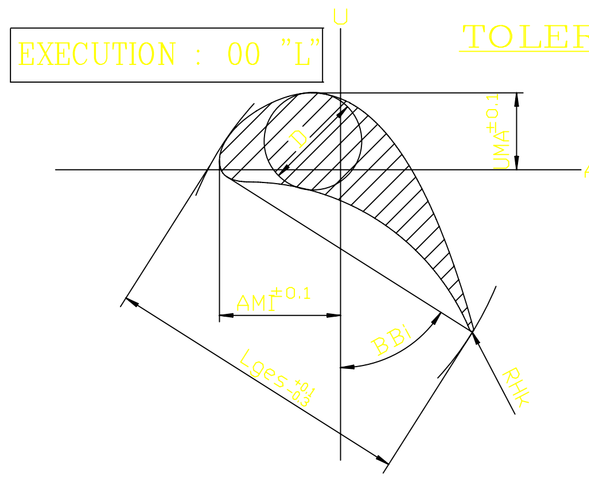

EXECUTION : 00 "L"

TOLERENCES

0.10	PROFILE FORM
± 0.10	PROFILE THICKNESS
± 0.30	PROFILE ANGLE
+0.04 −0.02	PITCH

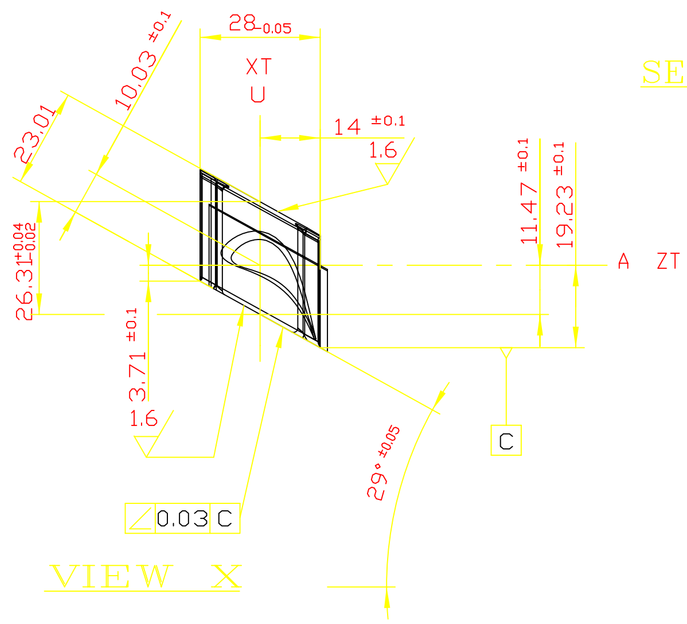

VIEW X

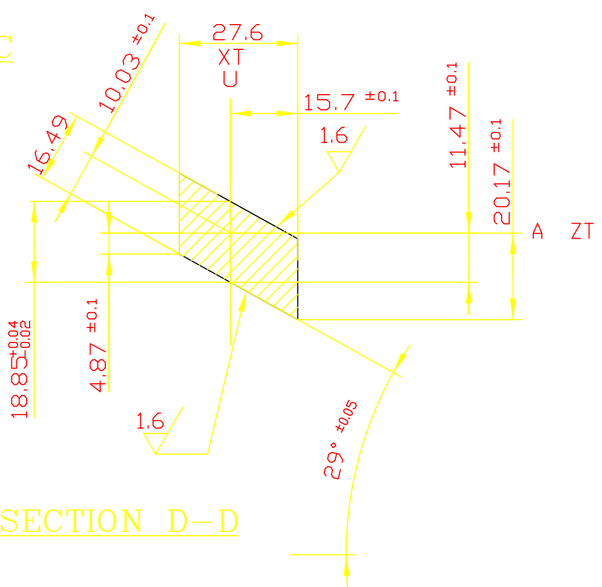

SECTION D-D

NOTES

1) PROFILE COORDINATES AS PER DRAWING NO.: 0-105-18-62001-00

2) SINE BAR VALUES FOR 250MM LENGTH: EX = 2.3740 and EY=8.5763

SECTION AX	Hx	Lges	AMI	UMA	RHk	BBi	D
A1 - A1	-10.0	23.17	6.61	5.89	0.12	52.60	7.47
A2 - A2	0.0	23.65	6.79	6.02	0.13	52.31	7.62
A3 - A3	10.0	24.13	6.96	6.16	0.13	52.03	7.78
A8 - A8	60.0	26.55	7.81	6.84	0.14	50.65	8.56
A13 - A13	110.0	28.96	8.65	7.53	0.16	49.28	9.33

LOCAL SMALLEST RADIUS OF CURVATURE ON PRESSURE SIDE: 15.2 MM

WEIGHT (KG)	NO. OF BLADES	EXECUTION	VAR
0.50	2	03	03
0.50	160	02	02
0.50	2	01	01
0.50	160	00	00

TYPE OF PRODUCT OR NAME OF CUSTOMER/PROJECT: GIRAL 125 MW

	NAME	SIGN.	DATE	NO.OF VAR.
DRN.	MRR		09.09.04	-N.A-
CHD.	TSP		09.09.04	
APPD	CNVR		09.09.04	

DEPT.	UNTOL. DIMS.	SCALE	WEIGHT (KG)	REF. TO ASSY. DRG.	ITEM NO.	NO.OF ITEMS
I.T.D CODE 415	GR. C/M/F	NTS	-N.A-	-N.A-	-N.A-	-N.A-

TITLE: GUIDE BLADE IP 18L F-001-S28-TR194/144B2M

CARD CODE: N.A

DRAWING NO. 1-105-18-62001 REV. 02

SHT. No 01 NO. OF SHT 01

REV	DATE	ALTERED	CHD/APPD
02	22.11.2004	TS PRABHAKAR	CNV RAMANA
01	09.09.04	MRR	TSP

ZONE B2: EX & EY VALUES ADDED AS NOTE 2.

ZONE B2: REVISED TO ACHIEVE 4.0 MM RADIAL CLEARANCES. DIM 37.0 WAS 25.5

GENERAL DIMENSIONAL LIMITS,FITS & TOLERANCES AS PER HY02-30261

THE INFORMATION ON THIS DOCUMENT IS NOT BE USED DIRECTLY OR INDIRECTLY

CALS LIMITED. IT MUST ST OF THE COMPANY

SIGN. AND DATE | REF. DRG. NO. | COMPUTER FILE NAME | INVENTORY NO

FIRST ANGLE PROJECTION

(ALL DIMENSIONS ARE IN mm)

DRG. NO. 2-303-15-00133 SH. 07 OF 07

VAR. No.	ROW No.	PROFILE	VIEW E															VIEW T					VIEW S						VIEW P						VIEW V			
			E1	E2	E3	E4	E5	E6	E7 deg.	E8	E9	E10	E11	E12	E13	E14	E15	T1	T2	T3	T4	T5	S1	S2	S3	S4	S5	S6	P1	P2	P3	P4	P5	P6	V1	V2	V3	V4
14	14	T4-32.0-63.5	2.48	0.29	29.23	127.9	113.3	118.9	15	111.3	177.4	2.28	29.63	49.0	56.6	54.6	442.4	6.3	17.0	17.28	18.0	31.17	12.60	0.63	112.2	19.0	18.4	474.4	2.48	0.29	2.28	0.0	0.0	32.0	6.3	17.28	18.0	31.17

VAR. No.	ROW No.	MATERIAL SPECIFICATION	NO. OF PIECES (POS 1)	FLAT SIZE		NET WT.		BF deg.	BETA deg.
				NORMAL BLADE	LOCK BLADE	NORMAL BLADE	LOCK BLADE		
14	14	HY10764 /X20CR13	75	55X35	55X35	0.524	0.524	20	63.5

VAR. No.	ROW No.	SINE-BAR VALUES						REMARKS
		NORMAL BLADE			LOCK BLADE			
		EX	EY	M	EX	EY	M	
14	14	3.572	19.625	36.619	3.572	19.625	36.619	

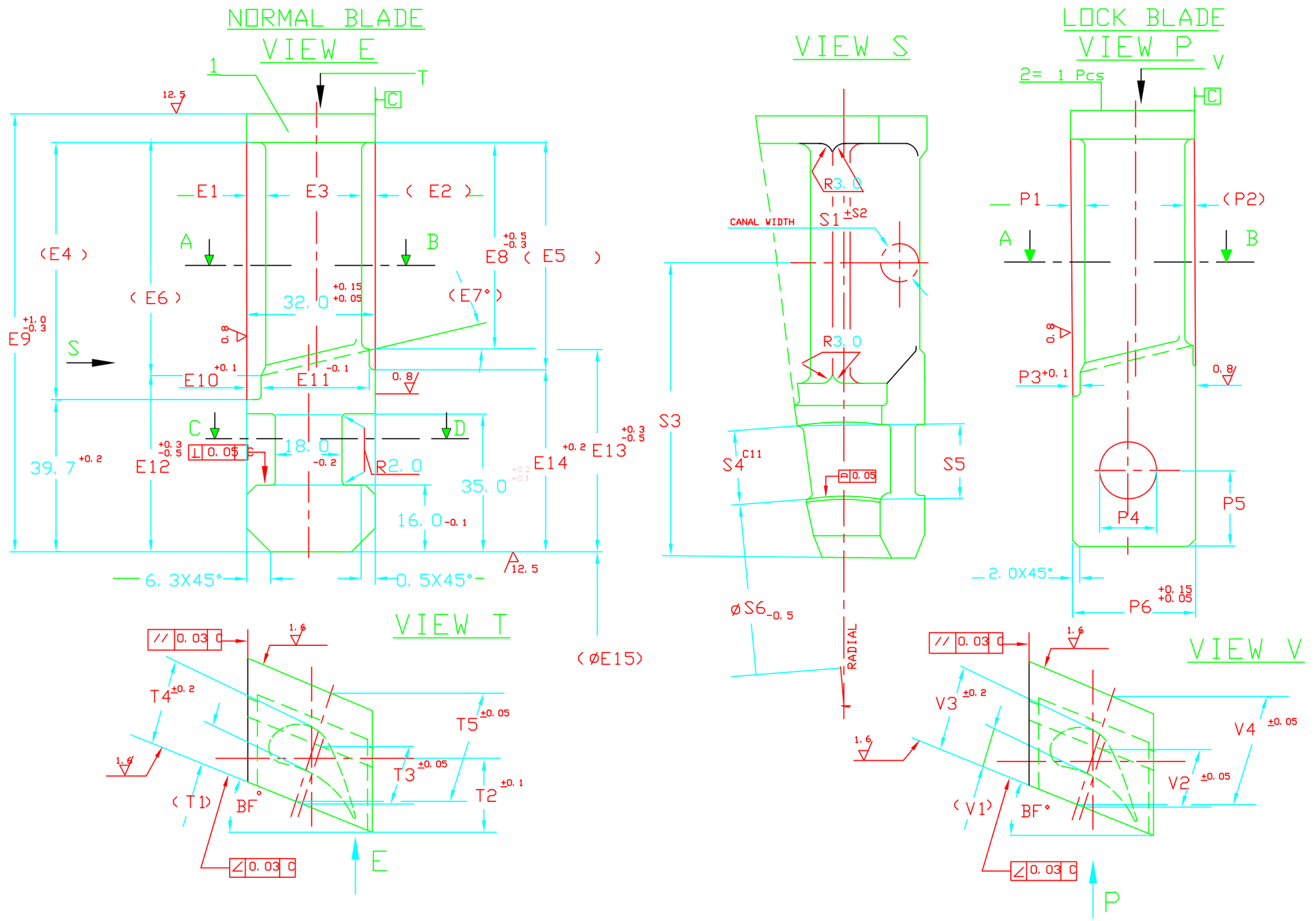

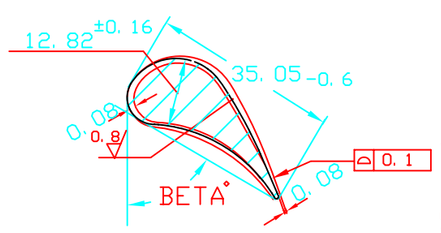

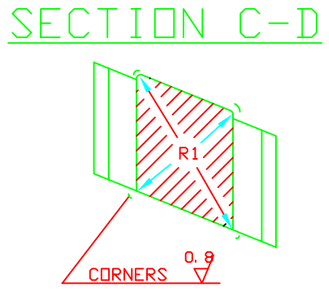

1. Direction of Rotation is ANTICLOCKWISE when seen in the direction of steam flow
2. Final Machining as per Blading Plan
3. Incase of bottom sloped blades fitting to be done in such a way that no projection edges exist on blades joint surface (this is to be achieved by limiting the canals of pressure side and suction side of adjacent blade)
4. Dimensions for position and height of canals are with reference to suction side.
5. Profile Co-ordinates as per Drawing Nos. 4-301-75-00164-00 4-301-75-00 168-00.
6. Missing dimensions of Pos. No. 2 to be seen in Pos. No. 1
7. All unmentioned corners to have radius = 1.6 mm

14	14
VAR.	ROW

GENERAL DIMENSIONAL LIMITS, FITS & TOLERANCES AS PER HY0230261

COMPUTER FILE NAME T342MB07.DWG

REF. DRG. NO.

SIGN. AND DATE

INVENTORY NO.

TYPE OF PRODUCT OR NAME OF CUSTOMER/PROJECT

	NAME	SIGN.	DATE	NO.OF VAR.
DRN.	TS PRABHAKAR		12.10.2001	-N.A.-
CHD.	TS PRABHAKAR		12.10.2001	
APPD.	CNV RAMANA		12.10.2001	

REV.	DATE	ALTERED	CHD/APPD	ZONE
02	04.02.2003	TSP	CNVR	C-6 PROFILE GAP 0.06 WAS 0.25
01	12.10.2001	TSP	CNVR	PROFILE GAP 0.25 WAS 0.06
00	04.02.1999	TSP	MRB	

DEPT. I.T.D. CODE 415 | UNTOL. DIMS. GR. ~~C/M/F~~ | SCALE N.T.S. | WEIGHT (KG) -N.A.- | REF. TO ASSY. DRG. -N.A.- | ITEM NO. -N.A.- | NO.OF ITEMS -N.A.-

TITLE *HP MOVING BLADE*
T4 - 32.0 - 63.5 (29.23)

CARD CODE N.A.

DRAWING NO. 2-303-15-00133 REV. 02

SHT. No. 07 NO. OF SHT. 07

FIRST ANGLE PROJECTION

(ALL DIMENSIONS ARE IN mm)

DRG. NO. 2-303-15-00150

SH. 01 OF 06

VAR. No.	ROW No.	PROFILE	VIEW E															VIEW T					VIEW S						VIEW P						VIEW V			
			E1	E2	E3	E4	E5	E6	E7 deg.	E8	E9	E10	E11	E12	E13	E14	E15	T1	T2	T3	T4	T5	S1	S2	S3	S4	S5	S6	P1	P2	P3	P4	P5	P6	V1	V2	V3	V4
1	1	T7-12.5-51.5	1.40	1.28	9.82	21.5	21.5	14.0	0	14.0	43.3	1.20	10.22	23.8	23.8	16.3	262.4	4.2	8.5	8.33	9.2	11.09	3.15	0.11	30.8	0.0	7.5	275.0	1.40	1.28	1.20	0.0	0.0	12.5	4.2	8.33	9.2	11.09
2	2	T7-12.5-51.5	1.40	1.28	9.82	22.6	22.6	15.1	0	15.1	44.4	1.20	10.22	23.8	23.8	16.3	262.4	4.0	8.6	8.14	8.9	10.90	3.11	0.11	31.4	0.0	7.5	275.0	1.40	1.28	1.20	0.0	0.0	12.5	4.0	8.14	8.9	10.90
3	3	T7-12.5-51.5	1.40	1.28	9.82	24.1	24.1	16.6	0	16.6	45.9	1.20	10.22	23.8	23.8	16.3	262.4	4.0	8.6	8.14	8.9	10.99	3.13	0.11	32.1	0.0	7.5	275.0	1.40	1.28	1.20	0.0	0.0	12.5	4.0	8.14	8.9	10.99
4	4	T7-12.5-51.5	1.40	1.28	9.82	25.6	25.6	18.1	0	18.1	47.4	1.20	10.22	23.8	23.8	16.3	262.4	4.0	8.6	8.14	8.9	11.08	3.16	0.11	32.9	0.0	7.5	275.0	1.40	1.28	1.20	0.0	0.0	12.5	4.0	8.14	8.9	11.08
5	5	T7-12.5-51.5	1.40	1.28	9.82	27.3	27.3	19.8	0	19.8	49.1	1.20	10.22	23.8	23.8	16.3	262.4	3.7	8.7	7.94	8.6	10.91	3.13	0.11	33.7	0.0	7.5	275.0	1.40	1.28	1.20	0.0	0.0	12.5	3.7	7.94	8.6	10.91

VAR. No.	ROW No.	MATERIAL SPECIFICATION	NO. OF PIECES (POS 1)	FLAT SIZE		NET WT.		BF deg.	BETA deg.
				NORMAL BLADE	LOCK BLADE	NORMAL BLADE	LOCK BLADE		
1	1	HY10766 /X22CRMOV121	93	24X13	24X13	0.026	0.026	20	51.5
2	2	HY10766 /X22CRMOV121	94	24X13	24X13	0.026	0.026	22	51.5
3	3	HY10766 /X22CRMOV121	94	24X13	24X13	0.026	0.026	22	51.5
4	4	HY10766 /X22CRMOV121	94	24X13	24X13	0.027	0.027	22	51.5
5	5	HY10766 /X22CRMOV121	95	24X13	24X13	0.027	0.027	24	51.5

VAR. No.	ROW No.	SINE-BAR VALUES						REMARKS
		NORMAL BLADE			LOCK BLADE			
		EX	EY	M	EX	EY	M	
1	1	2.921	16.059	24.212	2.921	16.059	24.212	
2	2	3.167	15.686	23.654	3.167	15.686	23.654	
3	3	3.167	15.686	23.654	3.167	15.686	23.654	
4	4	3.167	15.686	23.654	3.167	15.686	23.654	
5	5	3.405	15.302	23.078	3.405	15.302	23.078	

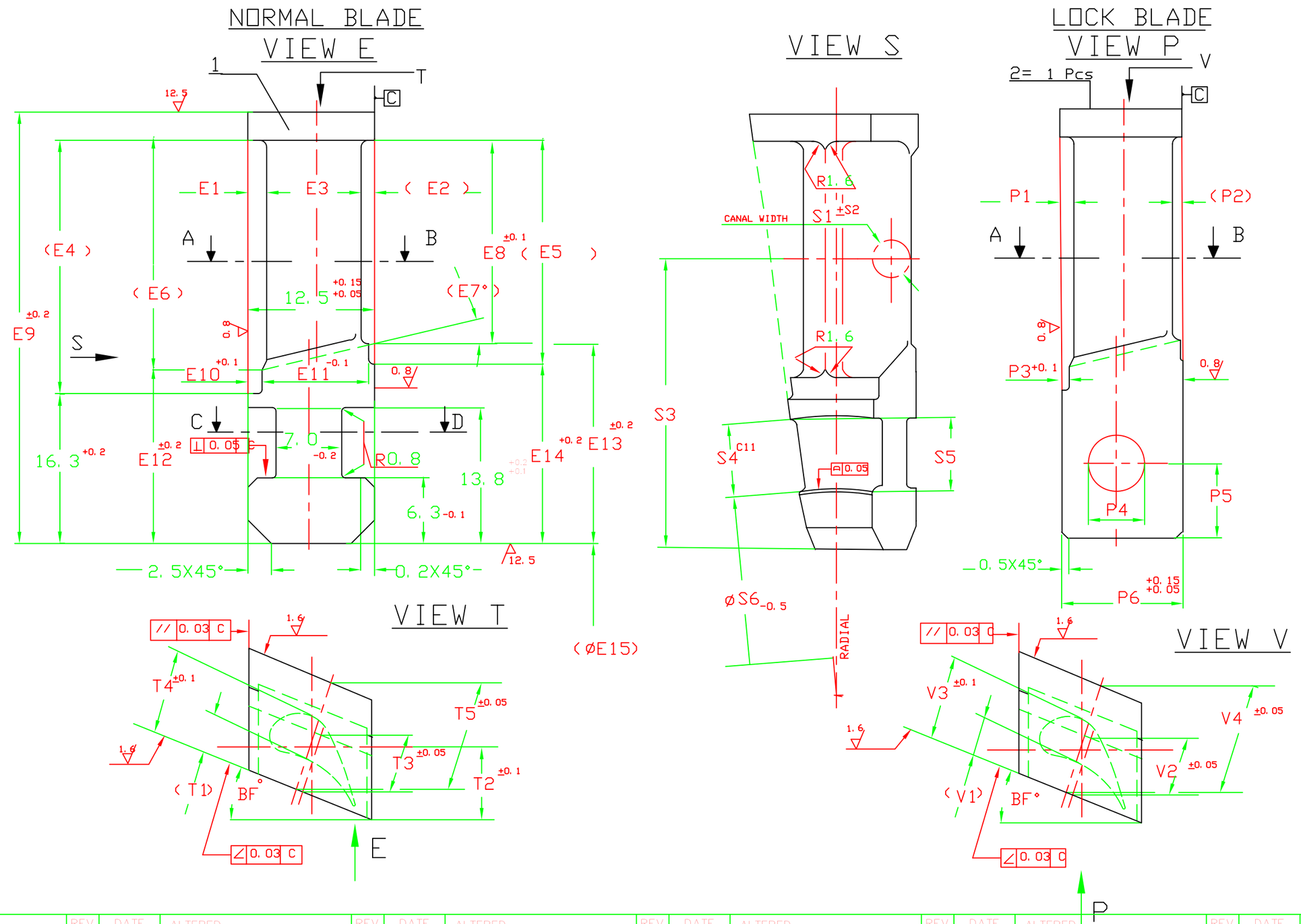

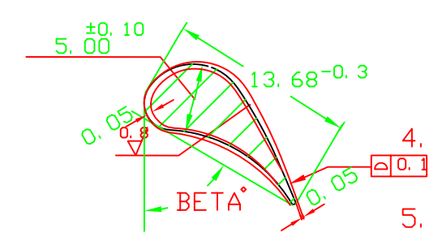

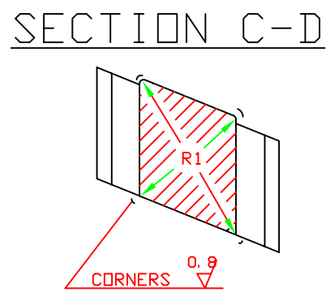

1. Direction of Rotation is ANTICLOCKWISE when seen in the direction of steam flow
2. Final Machining as per Blading Plan
3. Incase of bottom sloped blades fitting to be done in such a way that no projection edges exist on blades joint surface (this is to be achieved by limiting the canals of pressure side and suction side of adjacent blade)
4. Dimensions for position and height of canals are with reference to suction side.
5. Profile Co-ordinates as per Drawing Nos. 4-301-75-00164-00 4-301-75-00 190-00.
6. Missing dimensions of Pos. No. 2 to be seen in Pos. No. 1
7. All unmentioned corners to have radius = 1.6 mm

VAR.	ROW
5	5
4	4
3	3
2	2
1	1

3.2 / 12.5 / 1.6 / 0.8

GENERAL DIMENSIONAL LIMITS, FITS & TOLERANCES AS PER HY0230261

COMPUTER FILE NAME: JDCLMB01.DWG

SIGN. AND DATE | REF. DRG. NO. | INVENTORY NO

REV.	DATE	ALTERED	REV.	DATE	ALTERED	REV.	DATE	ALTERED	REV.	DATE	ALTERED	REV.	DATE	ALTERED
		CHD/APPD			CHD/APPD			CHD/APPD			CHD/APPD			CHD/APPD
ZONE			ZONE			ZONE			ZONE			ZONE		

TYPE OF PRODUCT OR NAME OF CUSTOMER/PROJECT

	NAME	SIGN.	DATE	NO. OF VAR.
DRN.	TVP BABU		29.02.2000	-N.A.-
CHD.	TS PRABHAKAR		29.02.2000	
APPD.	CNV RAMANA		29.02.2000	

DEPT.	UNTOL. DIMS. GR.		SCALE	WEIGHT (KG)	REF. TO ASSY. DRG.	ITEM NO.	NO. OF ITEMS
I.T.D. CODE 415	~~C/H/F~~		N.T.S.	-N.A.-	-N.A.-	-N.A.-	-N.A.-

TITLE *HP MOVING BLADE*
T7 - 12.5 - 51.5 (9.82)

CARD CODE N.A.

DRAWING NO. 2-303-15-00150 REV. 00

SHT. No. 01 NO. OF SHT. 06

FIRST ANGLE PROJECTION

(ALL DIMENSIONS ARE IN mm)

DRG. NO. 3-107-47-62020

SH. 03 OF 04

VAR.	STAGE	QTY/ROW INCLUDING JOINT BLADE	H	D1	D2	D3	D4	D5	D6	D7	αD DEG.	αD MIN.	γD DEG.	γD MIN.	S1	S2	S3	S4	S5	S6	S7
04	4	186	183.9	176.0	176.1	176.2	53.9	50.1	46.4	122.1	0	−27	16	42	176.2	176.1	176.0	54.2	50.2	46.2	121.8

VAR.	STAGE	αS DEG.	αS MIN.	γS DEG.	γS MIN.	E	øK	øN	øP	øI	L	Z	M	Q	QH	HT	EX (TAPER VALUES FOR JIG LENGTH 1000 *)	EY	EH
04	4	0	28	17	45	43.0	1472	1432	1366	1104.2	22.09	20.50	16.57	5.96	111.5	0.3	7.57	29.77	16.72

(* TAPER VALUE FOR PITCH INCREASE OF 0.40% RELATED TO øI)

TOLERANCES

- 0.10 PROFILE FORM
- ± 0.10 PROFILE THICKNESS
- − 0.30 PROFILE LENGTH
- 0.40 BLADE BENDING
- ± 0.30° PROFILE ANGLE
- ± 0.30 S & D DIMENSIONS

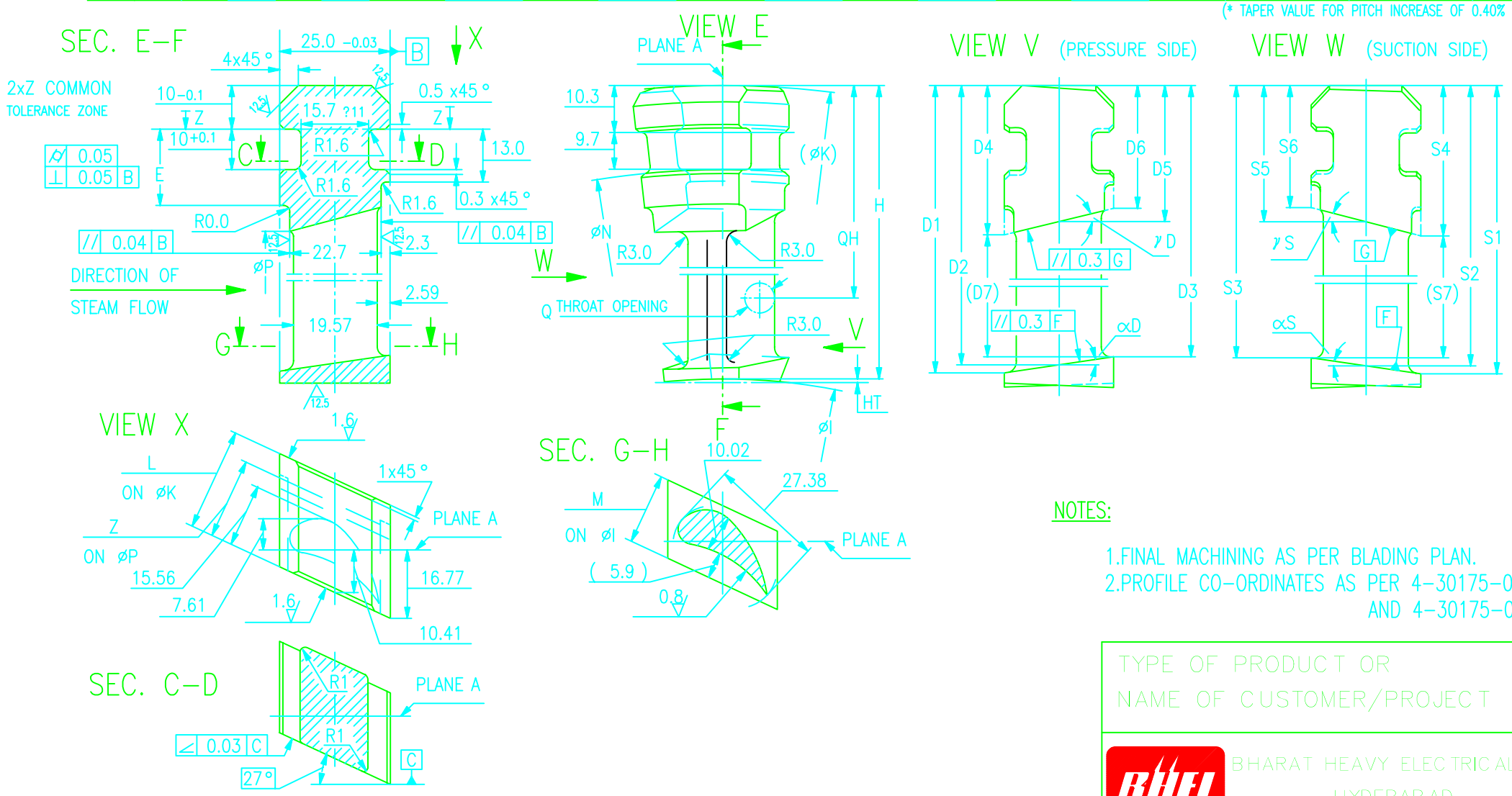

NOTES:

1. FINAL MACHINING AS PER BLADING PLAN.
2. PROFILE CO-ORDINATES AS PER 4-30175-00164-00 AND 4-30175-00167-00

04	4
VAR.	ROW

TYPE OF PRODUCT OR NAME OF CUSTOMER/PROJECT: JINDAL / GIPCL N30-2X3.2

BHEL — BHARAT HEAVY ELECTRICALS LTD. HYDERABAD

	NAME	SIGN.	DATE
DRN.	T.V.P. BABU		10.01.96
CHD.	TS PRABHAKAR		10.01.96
APPD.	P KODANDARAM		10.01.96

NO. OF VAR. −N.A.−

DEPT. I.T.D. CODE 415 | UNTOL. DIMS. GR. ~~C/M/F~~ | SCALE NTS | WEIGHT (KG) −N.A.− | REF. TO ASSY. DRG. −N.A.− | ITEM NO. −N.A.− | NO. OF ITEMS −N.A.−

TITLE: GUIDE BLADE T4-25-51

CARD CODE N.A. | DRAWING NO. 3-107-47-62020 | REV. 00

SHT. No 03 | NO. OF SHT. 04

REV.	DATE	ALTERED	REV.	DATE	ALTERED	REV.	DATE	ALTERED
		CHD/APPD			CHD/APPD			CHD/APPD
ZONE			ZONE			ZONE		

GENERAL DIMENSIONAL LIMITS, FITS & TOLERANCES AS PER HY0230261

INVENTORY NO | SIGN. AND DATE | REF. DRG. NO. | COMPUTER FILE NAME

THE INFORMATION ON THIS DOCUMENT IS THE PROPERTY OF BHARAT HEAVY ELECTRICALS LIMITED. IT MUST NOT BE USED DIRECTLY OR INDIRECTLY IN ANY WAY DETRIMENTAL TO THE INTEREST OF THE COMPANY

FIRST ANGLE PROJECTION

(ALL DIMENSIONS ARE IN mm)

DRG. NO. 3-107-47-62021

SH. 03 OF 04

3.2 / 0.8 / 1.6 / 12.5

VAR	STAGE	HT	H	E	D1	D2	D3	D4	D5	D6	D7	αD DEG.	αD MIN	γD DEG.	γD MIN	S1	S2	S3	S4	S5	S6	S7
04	4	0.3	183.9	43.0	176.0	176.1	176.2	53.9	50.1	46.4	122.1	0	-27	16	42	176.2	176.1	176.0	54.2	50.2	46.2	121.8
			DEG.	MIN																		

VAR	STAGE	αS DEG.	αS MIN	γS		øK	øN	øP	øI	L1	L2	L3	L4	L5	L6	L7	L8	L9	RD	SINE BAR VAL. FOR L=1000 (EY) POS 1	POS 2
04	4	0	28	17	45	1472	1432	1366	1104.2	6.6	31.0	8.9	24.0	31.61	38.74	44.89	28.3	33.6	19.8	14.57	61.22

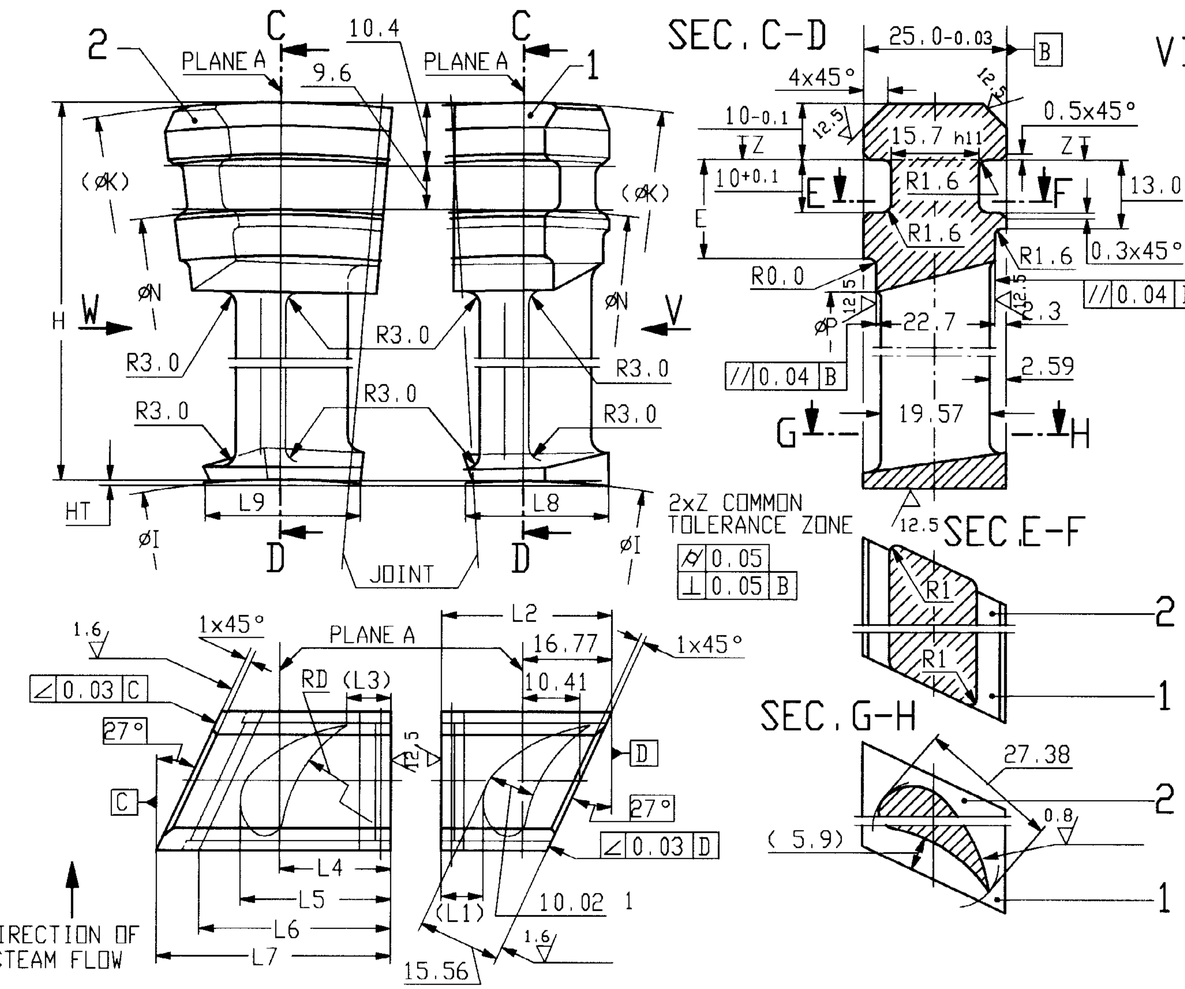

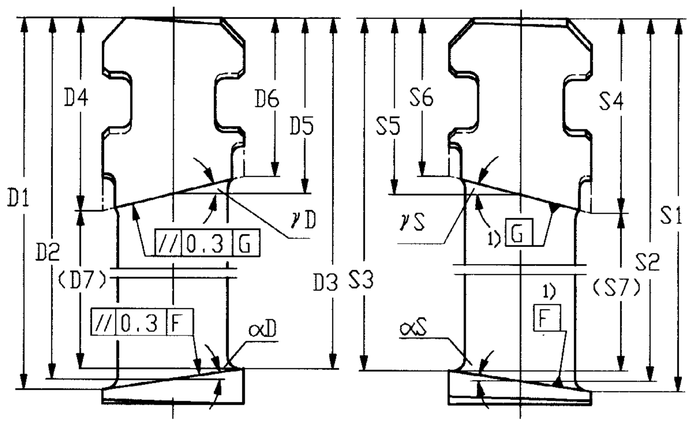

TOLERANCES

0.10	PROFILE FORM
±0.10	PROFILE THICHKNESS
-0.30	PROFILE LENGTH
0.40	BLADE BENDING
±0.30°	PROFILE ANGLE
±0.30	S & D DIMENSIONS

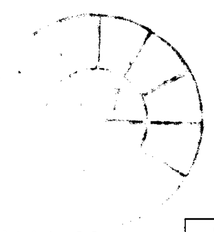

NOTE:

1. FINAL MACHINING AS PER BLADING PLAN
2. PROFILE CO-ODINATES AS PER 4-30175-00164-00 AND 4-30175-00167-00

ROW.	VAR.
04	04

TYPE OF PRODUCT OR NAME OF CUSTOMER/PROJECT: JINDAL / GIPCL

	NAME	SIGN.	DATE
DRN.	TVP BABU		25.01.96
CHD.	TS PRABHAKAR		25.01.96
APPD.	P KODANDARAM		25.01.96

NO. OF VAR.: N.A.

DEPT. I.T.D. CODE 415	UNTOL. DIMS. GR. ~~C/M/F~~	SCALE N.T.S.	WEIGHT (KG) N.A.	REF. TO ASSY. DRG. -N.A.-	ITEM NO. -N.A.-	NO. OF ITEMS -N.A.-

TITLE: JOINT BLADE T4-25-51

CARD CODE: N.A.

DRAWING NO. 3-107-47-62021 REV. 00

SHT. No 03 NO. OF SHT. 04

REV	DATE	ALTERED CHD/APPD	REV.	DATE	ALTERED CHD/APPD	REV.	DATE	ALTERED CHD/APPD
ZONE			ZONE			ZONE		

COMPUTER FILE NAME

REF. DRG. NO.

SIGN. AND DATE

INVENTORY NO

GENERAL DIMENSIONAL LIMITS, FITS & TOLERANCES AS PER HY0230261

THE INFORMATION ON THIS DOCUMENT IS THE PROPERTY OF IT MUST NOT BE USED DIRECTLY OR INDIRECTLY IN ANY WAY DETRIMENTAL TO THE INTEREST OF THE COMPANY

FIRST ANGLE PROJECTION

(ALL DIMENSIONS ARE IN mm)

DRG NO. 3-107-47-62026

SH. 01 OF 04

1) EINSCHLIESSLICH 2 SCHAUFELN AUSFUEHRUNG 01
INCLUDING 2 BLADES TYPE 01

STUFE STAGE	ANZ./REIHE QTY/ROW 1)	H	D1	D2	D3	D4	D5	D6	D7	aD GRD.	aD MIN.	cD GRD.	cD MIN.	S1	S2	S3	S4	S5	S6	S7
1	238	160.0	147.0	147.1	147.2	44.0	44.1	44.2	102.8	0	-47	0	-54	147.2	147.1	147.0	44.2	44.1	44.0	102.8

KONUSW. F. TEILUNGS-VERGR. UM 0.60 % AUF ØI
TAPER VAL. F. PITCH-INCREASE OF 0.60% RELATED TO ØI

STUFE STAGE	aS GRD.	aS MIN.	cS GRD.	cS MIN.		ØK	ØN	ØP	ØI	TK	TP	TI	L	M	Q	QH	LT	EX 2)	EY 2)	EH 2)
1	0	47	0	54		1799	1759	1711	1479.0	23.84	22.71	19.73	19.99	16.55	6.48	95.5	18.91	7.00	21.55	16.54

2) KONUSW. F. VORR.-LG. 1000
TAPER VAL. F.JIG LG. 1000

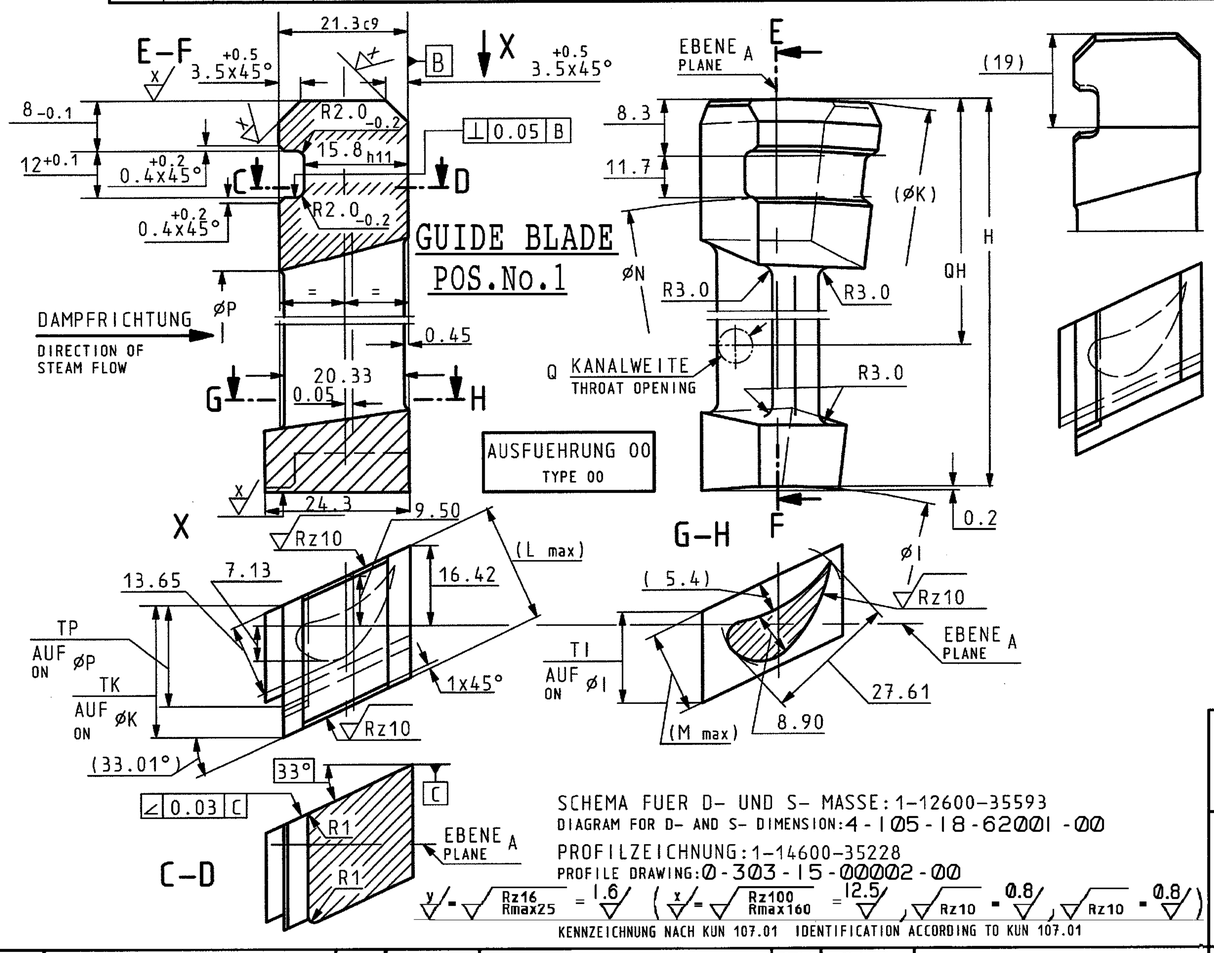

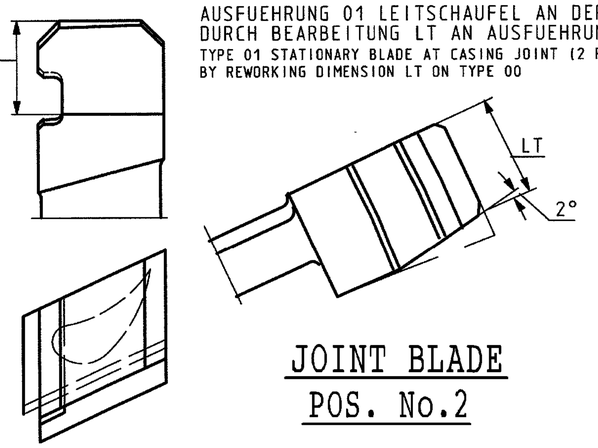

AUSFUEHRUNG 01 LEITSCHAUFEL AN DER TEILFUGE (2 STUECK)
DURCH BEARBEITUNG LT AN AUSFUEHRUNG 00
TYPE 01 STATIONARY BLADE AT CASING JOINT (2 PIECES)
BY REWORKING DIMENSION LT ON TYPE 00

TOLERANZEN
TOLERANCES

0.10	PROFILFORM / PROFILE FORM
±0.10	PROFILDICKE / PROFILE THICKNESS
-0.30	PROFILLAENGE / PROFILE LENGTH
0.21	BLATT-DURCHBIEGUNG / BLADE BENDING
+0.04 -0.02	TEILUNG / PITCH
±0.30	S- UND D-MASSI / S- AND D-DIMENSIONS

SCHEMA FUER D- UND S- MASSE: 1-12600-35593
DIAGRAM FOR D- AND S- DIMENSION: 4-105-18-62001-00
PROFILZEICHNUNG: 1-14600-35228
PROFILE DRAWING: 0-303-15-00002-00

y = Rz16 / Rmax25 = 1.6 (x = Rz100 / Rmax160 = 12.5 , Rz10 = 0.8 , Rz10 = 0.8)

KENNZEICHNUNG NACH KUN 107.01 IDENTIFICATION ACCORDING TO KUN 107.01

X20Cr13/HY10764	FL.53x23	0.300	01	01
MATERIAL/MAT.SPEC.	Flat Size	Wt.(Kg)	VAR	ROW.

TYPE OF PRODUCT OR NAME OF CUSTOMER/PROJECT: KOTHAGUDEM 110MW

	NAME	SIGN	DATE	NO OF VAR
DRN	SCS/TVP		8.3.2000	NA
CHD	T.S.PRABHAKAR		8.3.2000	
APPD	C.N.V.RAMANA		8.3.2000	

DEPT	UNTOL DIMS		SCALE	WEIGHT (KG)	REF TO ASSY DRG	ITEM NO	NO OF ITEMS
ITD	GR ¢/M/¢		NTS	NA	NA	NA	NA
CODE 415							

TITLE: GUIDE BLADE TX-25-49.5

CARD CODE: NA

DRAWING NO: 3-107-47-62026 REV 00

SHT No 01 NO OF SHT 04

REV	DATE	ALTERED	REV	DATE	ALTERED	REV	DATE	ALTERED
		CHD/APPD			CHD/APPD			CHD/APPD
ZONE			ZONE			ZONE		

GENERAL DIMENSIONAL LIMITS, FITS & TOLERANCES AS PER HY0230261

INVENTORY NO | SIGN AND DATE | REF DRG NO 9528-32601 REV:00 | COMPUTER FILE NAME 3107476026-S01-R00.TIF

THE INFORMATION ON THIS DOCUMENT IS THE PROPERTY OF IT MUST NOT BE USED DIRECTLY OR INDIRECTLY IN ANY WAY DETRIMENTAL TO THE INTEREST OF THE COMPANY

FIRST ANGLE PROJECTION

(ALL DIMENSIONS ARE IN mm)

DRG. NO. 3-303-19-00019

SH. 01 OF 01

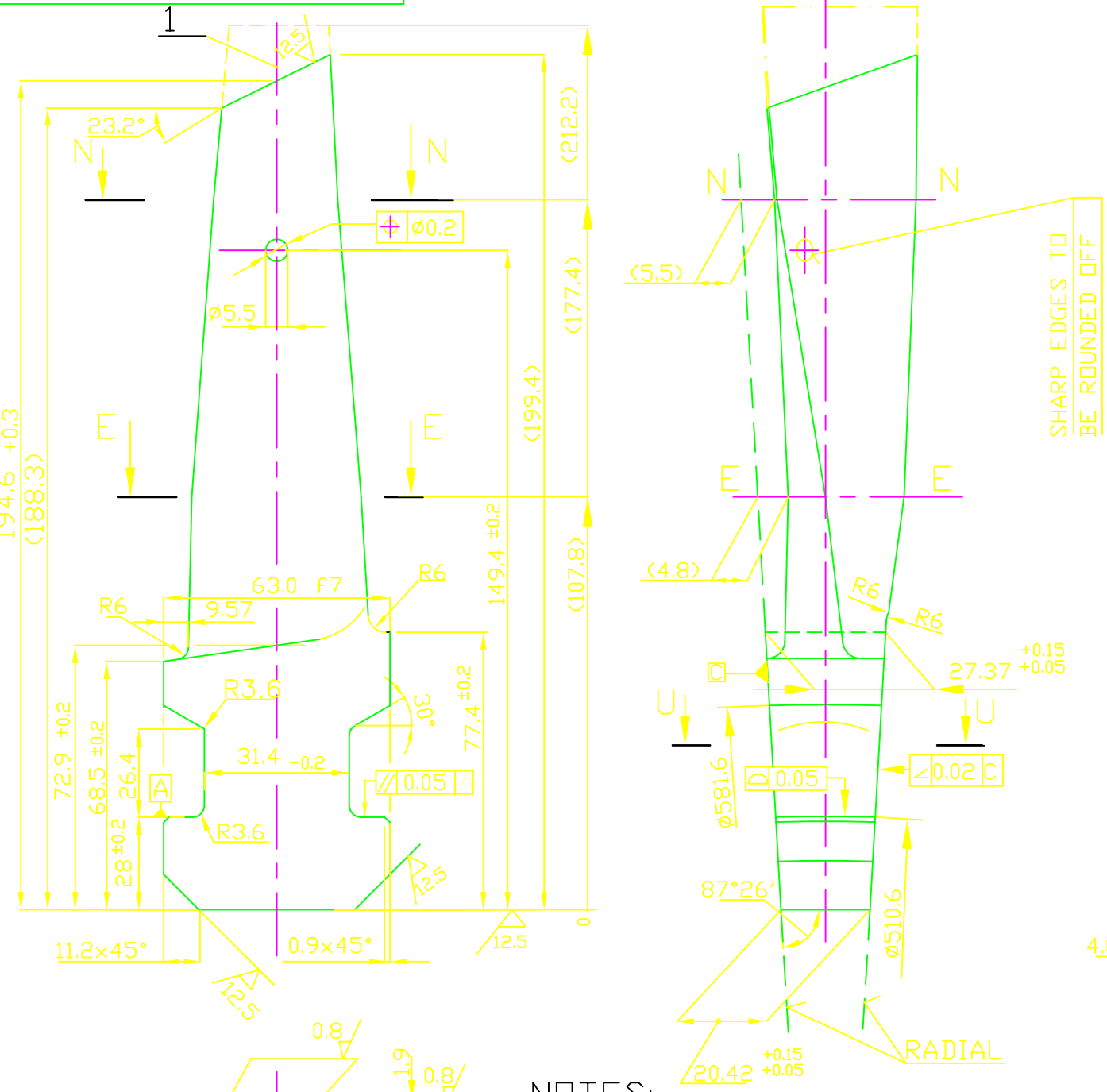

SECTION N-N

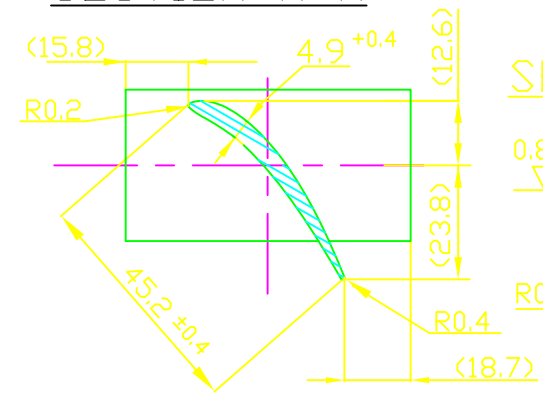

SECTION U-U

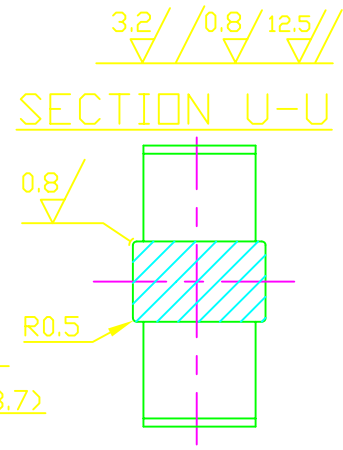

SECTION E-E

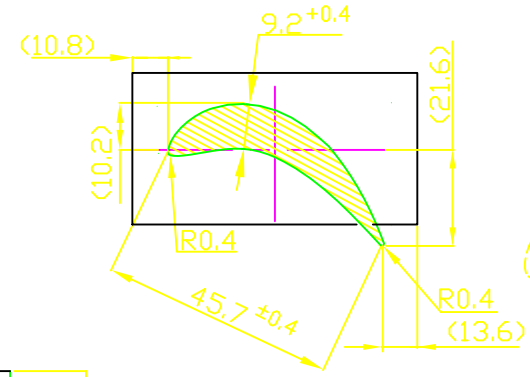

TOLERANCE ON PROFILE

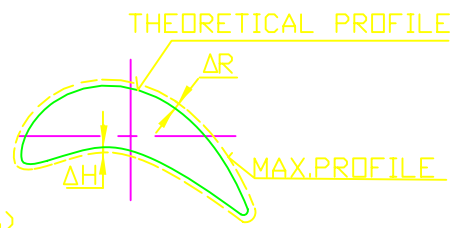

ΔRmax = 0.6 ΔRmin = 0 ΔHmax = 0.2

ΔHmin = 0 max. difference ΔR= 0.4

Σ(ΔR + ΔH)max =0.6 Σ (ΔR+ ΔH)min= 0.2

DIRECTION ROTATION IS ANTI-CLOCK WISE WHEN SEEN IN THE DIRECTION OF STEAM FLOW.

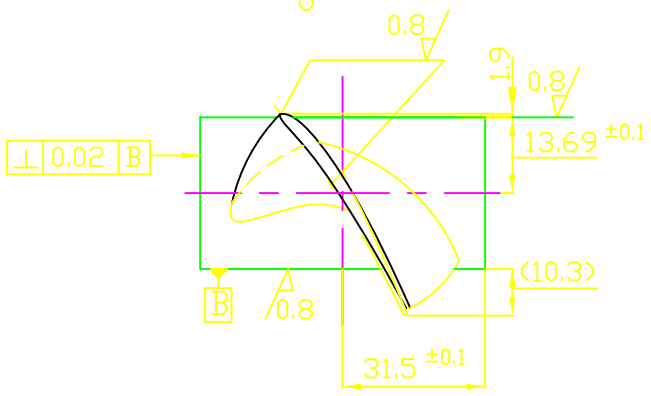

NOTES:

1. PROFILE CO-ORDINATES AS PER DRG.No.1-303-19-00007-00 (2sh)
2. FINAL MACHINING AS PER BLADING PLAN.
3. MISSING DIMENSIONS OF Pos.No.2. TO BE SEEN IN Pos.No.1.
4. EY FOR FULL ANGLE = 22.43
   EY FOR HALF ANGLE = 11.23

DESCRIPTION	Mat. Spc.	Wt.	No.Of Pcs.	POS.	VAR.
FL. 75 x 46	HY10764	0.76	1	2	-00
FL. 75 x 46		0.76	69	1	

TYPE OF PRODUCT OR NAME OF CUSTOMER/PROJECT

	NAME	SIGN.	DATE	NO.OF VAR.
DRN.	UAKPR RAJU		21.02.98	-N.A-
CHD.	TS PRABHAKAR		21.02.98	
APPD.	M ROSI BABU		21.02.98	

REV.	DATE	ALTERED	CHD/APPD
01	17.11.2004	TS PRABHAKAR	CNV RAMANA

Tolerance on Blade Hieght +0.7 was +1.3
+0.3 +0.8

DEPT. I.T.D. CODE 415 | UNTOL. DIMS. GR. ~~C/M/F~~ | SCALE N.T.S | WEIGHT (KG) -N.A- | REF. TO ASSY. DRG. -N.A.- | ITEM NO. -N.A.- | NO.OF ITEMS -N.A.-

TITLE LP MOVING BLADE SK 63-1 LEFT

CARD CODE N.A.

DRAWING NO. 3-303-19-00019 REV. 01

SHT. No 01 NO. OF SHT. 01

GENERAL DIMENSIONAL LIMITS,FITS & TOLERANCES AS PER HY0230261

SIGN. AND DATE | REF. DRG. NO. 4-2227-1105-00 | REV: F | COMPUTER FILE NAME D3190019.DWG

INVENTORY NO