THIRD ANGLE PROJECTION

(ALL DIMENSIONS ARE IN mm)

DRG. NO. 0-351-29-61020 SH. 01 OF 01

NOTES:

1. FOR APPLICABLE DRAWING NOTES SEE ITEM 2.

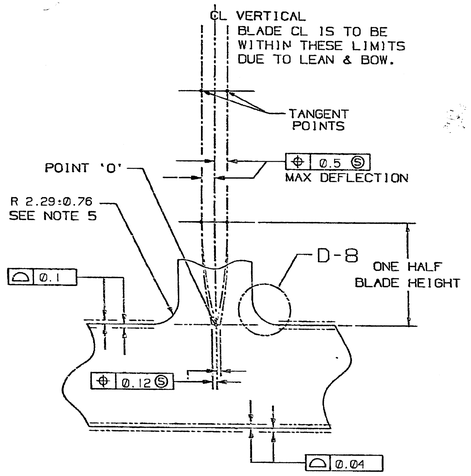

SECTION F-7 (G-3)

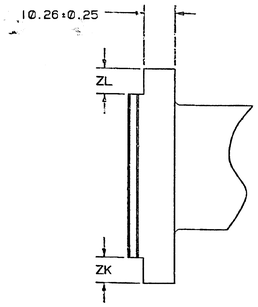

VIEW F-5 (G-5)

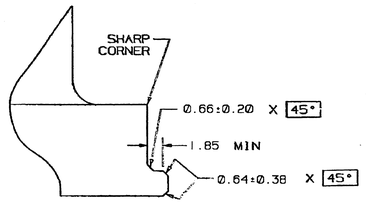

DETAIL E-5 (C-3)
(APPLIES TO BOTH SIDES OF BASE)

F-5

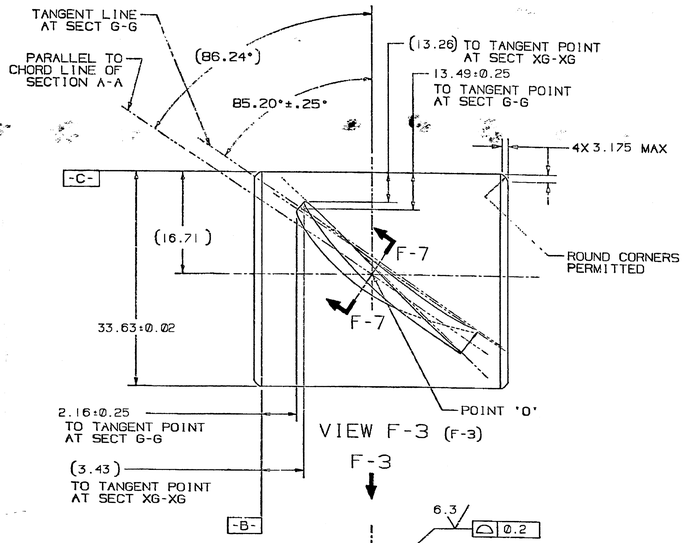

VIEW F-3 (F-3)

F-3

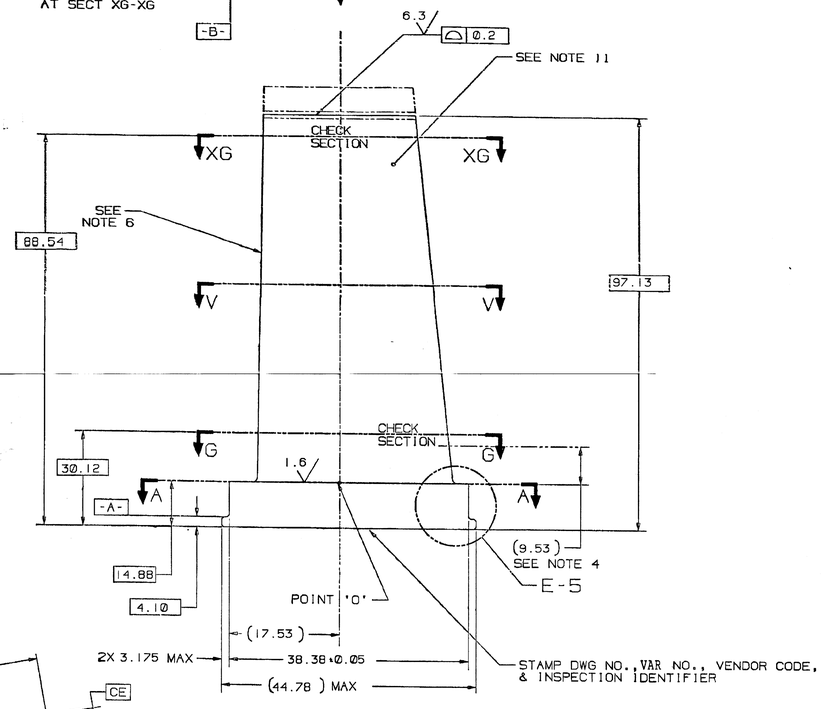

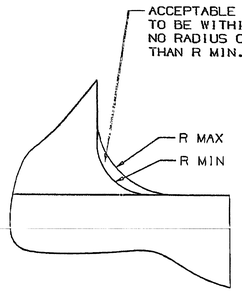

DETAIL D-8 (G-7)

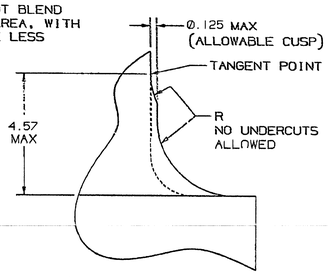

ALTERNATE METHOD OF MANUFACTURE
(REFER TO DETAIL D-8)

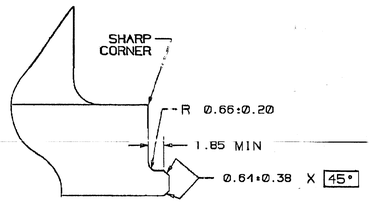

ALTERNATE METHOD OF MANUFACTURE
(REFER TO DETAIL E-5)

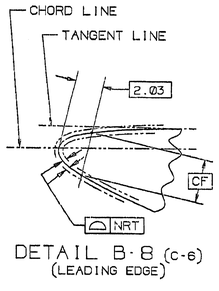

DETAIL B-8 (C-6)
(LEADING EDGE)

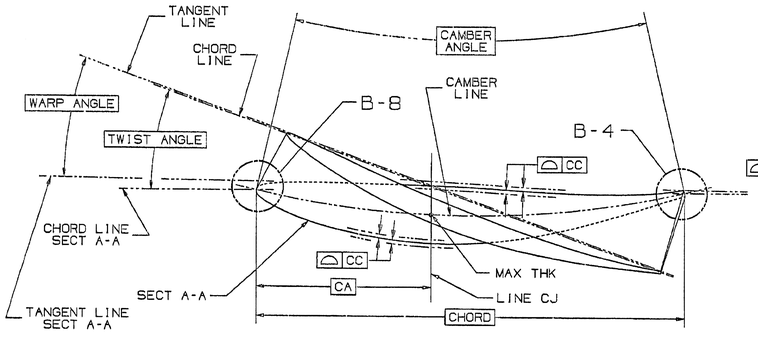

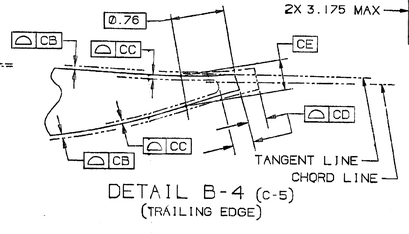

DETAIL B-4 (C-5)
(TRAILING EDGE)

VAR	ZK± 0.12	ZL±0.12	MATERIAL	COATING
01	OMIT	OMIT	HY10988	OMIT
02	OMIT	6.73	HY10988	OMIT
03	6.73	OMIT	HY10988	OMIT
04	OMIT	OMIT	HY10988	ITEM 6
05	OMIT	6.73	HY10988	ITEM 6
06	6.73	OMIT	HY10988	ITEM 6
07	OMIT	OMIT	HY10988	ITEM 7
08	OMIT	6.73	HY10988	ITEM 7
09	6.73	OMIT	HY10988	ITEM 7

-C-	G-4	1
-B-	F-3	1
-A-	D-4	1
DATUM	ZONE	SHEET

MATING PART REFERENCE DATA	
POINT 'O' Ø	1113.76
CONE ANGLE	.000

SECTION	SECTION HEIGHT	CHORD	PERCENT THICKNESS	CAMBER ANGLE	TWIST ANGLE	WARP ANGLE	THICKNESS AT 'CA'	CA	CB	CC	CD	CE	CF	NRT
A-A	0.00	34.80	13.500	29.5	0.00	0.00	4.694	13.920	0.038	0.079	0.348	0.612	2.108	0.076
G-G	15.24	34.14	12.800	29.8	0.625	0.50	4.376	13.655	0.038	0.076	0.340	0.594	1.979	0.076
V-V	45.72	32.79	11.604	30.3	1.821	1.50	3.835	13.116	0.038	0.076	0.328	0.584	1.763	0.076
XG-XG	73.66	31.55	10.399	30.8	2.785	2.30	3.335	12.619	0.038	0.076	0.315	0.574	1.552	0.076

7	COATING, ALUMINUM-INORGANIC	P16A-A93	GT10125
6	COATING, ALUMINUM-INORGANIC	P16A-A95	GT10606
5	ACPT REQT-BLADES & VANES	P29A-A9900	GT10128
4	COMPR VANES-PROCESSING	P3C-A980	GT10263
3	X-Y COORDS (21693421)	342A1111	GT10350
2	APPLICABLE DWG NOTES	314A5140	GT10459
1	APPLIED PRACTICES	348A9200	HY02302061
IT.	NOMENCLATURE	IDENT	BHEL SPEC
	LIST OF COMPLEMENTARY DOCUMENTS		

TYPE OF PRODUCT OR NAME OF CUSTOMER/PROJECT: GAS TURBINE FR-6B

BHARAT HEAVY ELECTRICALS LIMITED
HYDERABAD

	NAME	SIGN.	DATE	NO.OF VAR.
DRN.	CNBS		18.04.89	NA
CHD.	R.SRINIVAS		18.04.89	
APPD.	R.N.M		18.04.89	

DEPT. PTE CODE. 423 | UNTOL. DIMS. ±0.1/±1/F | SCALE NTS | WEIGHT (KG) 0.22 | REF. TO ASSY. DRG. – NA | ITEM NO. NA | NO.OF ITEMS NA

TITLE: VANE STATOR EGV2

CARD CODE | DRAWING NO. 0-351-29-61020 | REV. 00 | SHT. No. 01 | NO OF SHT. 01

REV.	DATE	ALTERED	CHD/APPD	ZONE

THE INFORMATION ON THIS DOCUMENT IS THE PROPERTY OF BHARAT HEAVY ELECTRICALS LIMITED. IT MUST NOT BE USED DIRECTLY OR INDIRECTLY IN ANY WAY DETRIMENTAL TO THE INTEREST OF THE COMPANY

GENERAL DIMENSIONAL LIMITS,FITS & TOLERANCES AS PER HY02302061

SCH. AND DATE | REF. DRG. NO. 10955169 REV - | COMPUTER FILE NAME 01282201.FTP

INFORMATION AND

THIRD ANGLE PROJECTION

(ALL DIMENSIONS ARE IN mm)

SH. 01 OF 01 DRG. NO 0-35129-91010

NOTES:

1. FOR APPLICABLE DRAWING NOTES SEE ITEM 2.

DRAWING		PRECISION MASTER	
PT NO	REV	DWG NO	REV
1-9, 102-103	C	217X237	–

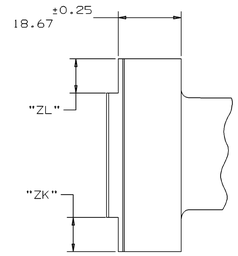

VIEW G-5 (G-4)

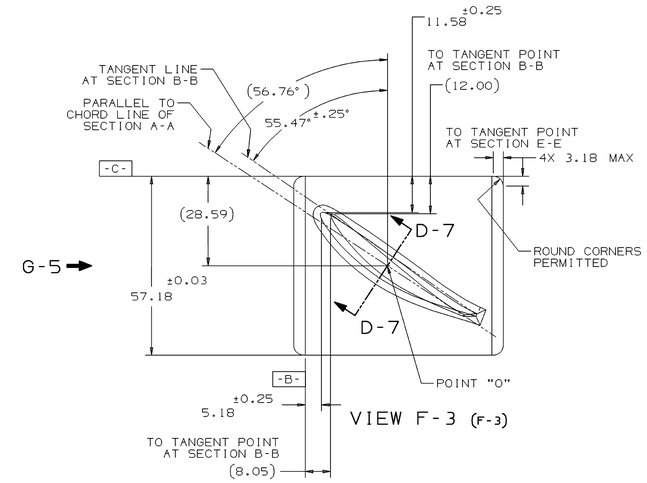

VIEW F-3 (F-3)

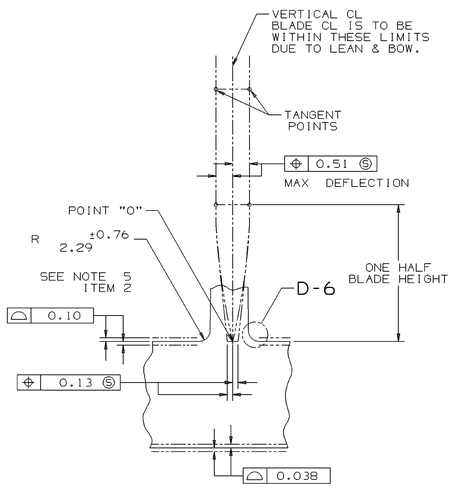

SECTION D-7 (G-3)

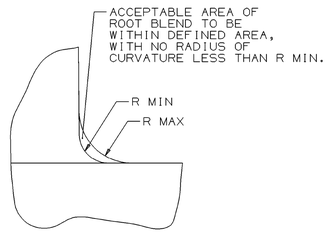

DETAIL D-6 (E-7)

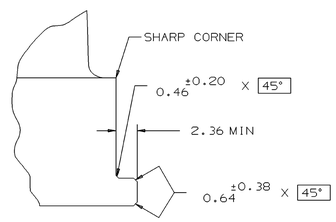

DETAIL D-5 (C-2)
(APPLIES TO BOTH SIDES OF BASE)

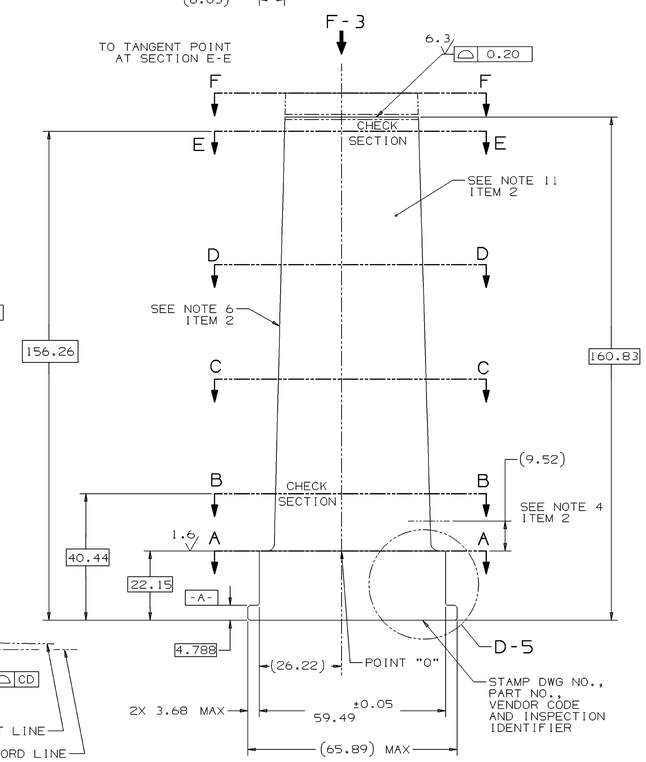

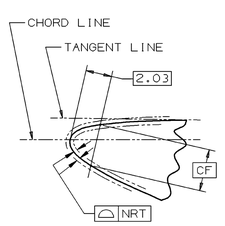

DETAIL B-8 (C-6)
(LEADING EDGE)

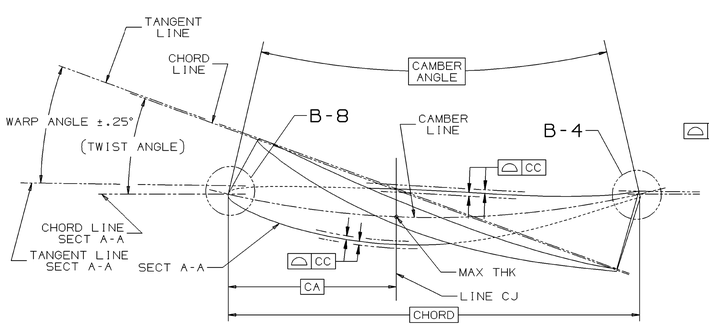

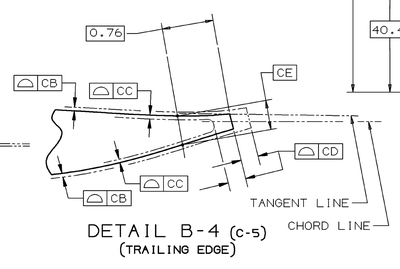

DETAIL B-4 (C-5)
(TRAILING EDGE)

SEE NOTES 9 & 10, ITEM 2

SECTION	SECTION HEIGHT FROM POINT "O"	CHORD	PERCENT THICKNESS	CAMBER ANGLE	TWIST ANGLE	WARP ANGLE ±.25	THICKNESS AT "CA"	CA	CB	CC	CD	CE	CF	NRT
A-A	0.000	59.436	342.900	24.6000	.0000	.0000	8.019	23.774	0.066	0.135	0.594	0.980	2.784	0.076
B-B	18.288	58.623	331.343	24.6000	.5000	.3840	7.643	23.449	0.064	0.127	0.587	0.935	2.672	0.076
C-C	54.864	57.023	308.204	24.6000	1.5500	1.2410	6.914	22.809	0.058	0.114	0.569	0.848	2.449	0.076
D-D	91.440	55.397	285.064	24.6000	2.7000	2.2480	6.213	22.159	0.051	0.104	0.554	0.765	2.233	0.076
E-E	134.112	53.518	258.064	24.6000	4.0500	3.4590	5.433	21.407	0.046	0.091	0.536	0.671	1.984	0.076
F-F	146.304	52.984	250.368	24.6000	4.4500	3.8270	5.220	21.194	0.043	0.086	0.531	0.645	1.915	0.076

03	P103	OMIT	11.91
02	P102	11.91	OMIT
01	P001	OMIT	OMIT
VAR	GE PT. NO.	ZK±0.13	ZL±0.13

MATING PART REFERENCE DATA	
POINT 'O' Ø	1893.42
CONE ANGLE	.000

7	COATING, ALUMINUM INORGANIC	P16A-AG3	
6	COATING, ALUMINUM INORGANIC	P16A-AG5	
5	ACPT REQT BLADES & VANES	P29A-AG900	GT10128
4	COMPR VANES PROCESSING	P3C-AG60	GT10083
3	X-Y COORDS	287A7837	GT10698
2	APPLICABLE DWG NOTES	314A5112	GT10459
1	APLD FRAC, GENL MACH	348A9200	GT10582
NOMENCLATURE		IDENT	BHELSPEC
LIST OF COMPLEMENTARY DOCUMENTS			

C	H-3	1
B	G-8	2
A	F-6	1
DATUM	ZONE	SHEET

THIRD ANGLE PROJECTION

GENERAL DIMENSIONAL LIMITS, FITS & TOLERANCES AS PER HY0230261

THE INFORMATION ON THIS DOCUMENT IS THE PROPERTY OF BHEL NOT BE USED DIRECTLY OR INDIRECTLY IN ANY WAY

COMPUTER FILE NAME: 0351299101GSOP400.TIF

REF DWG: 109E5113 REV C

SIGN. AND DATE

INVENTORY NO

REV.	DATE	ALTERED CHD/APPD	ZONE

TYPE OF PRODUCT OR

NAME OF CUSTOMER/PROJECT

	NAME	SIGN.	DATE	NO.OF VAR.
DRN.	SCS		06-12-06	NA
CHD.	AJAY		06-12-06	
APPD.	S.SRIRAM		06-12-06	

DEPT. GTD CODE 423 | UNTOL. DIMS. GR. B/M/F | SCALE NTS | WEIGHT (KG) 0.86 | REF. TO ASSY. DRG. 109E5113 | ITEM NO. NA | NO.OF ITEMS NA

TITLE: VANE STATOR STG 10

CARD CODE

DRAWING NO. 0-35129-91010 | REV. 00

SHT. No 01 | NO OF SHT. 01

THIRD ANGLE PROJECTION

(ALL DIMENSIONS ARE IN mm)

DRG. NO. 0-353-05-61009 SH. 1 OF 1

NOTES:

1. FOR APPLICABLE DRAWING NOTES SEE ITEM 2.

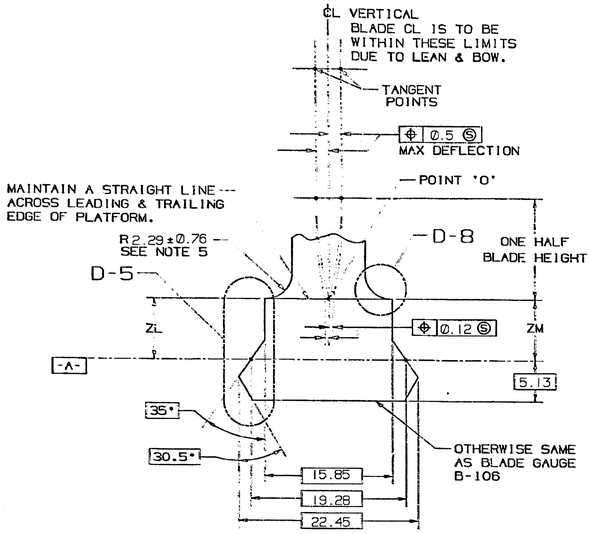

SECTIONS BA-BA, BB-BB & BC-BC (G-3)

SEE NOTE 6

SECTION	ZL +0.000 -0.508	ZM +0.000 -0.508
BA-BA	3.023	5.791
BB-BB	6.985	6.985
BC-BC	6.146	3.708

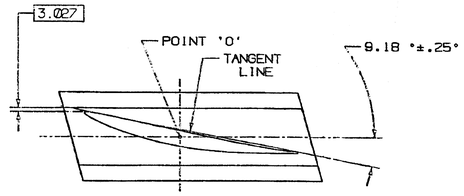

SECTION E-E (E-3)

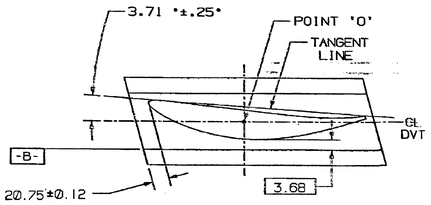

SECTION B-B (D-3)

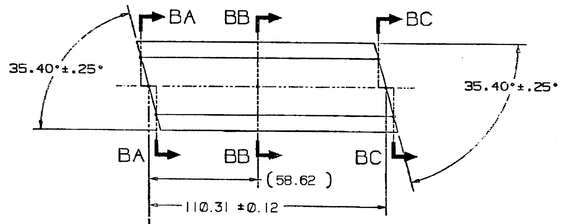

VIEW G-3 (F-3)
(AIRFOIL DELETED FOR CLARITY)

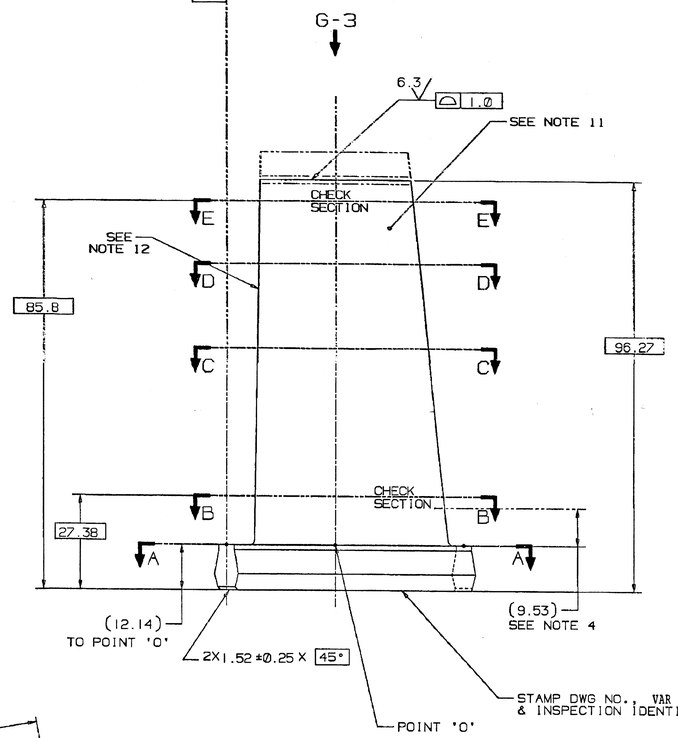

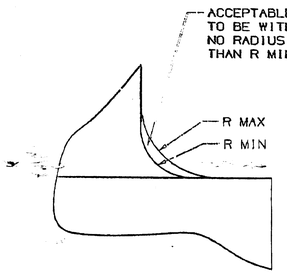

DETAIL D-8 (G-7)

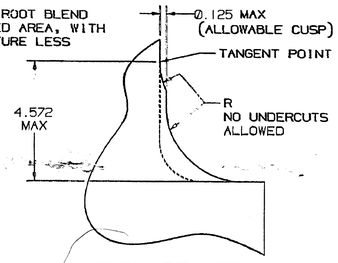

ALTERNATE METHOD OF MANUFACTURE
(REFER TO DETAIL D-8)

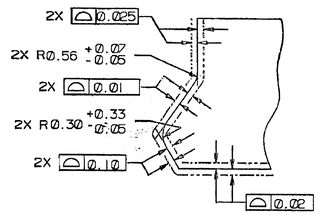

DETAIL D-5 (G-7)

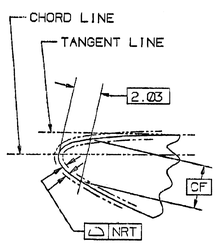

DETAIL B-8 (C-6)
(LEADING EDGE)

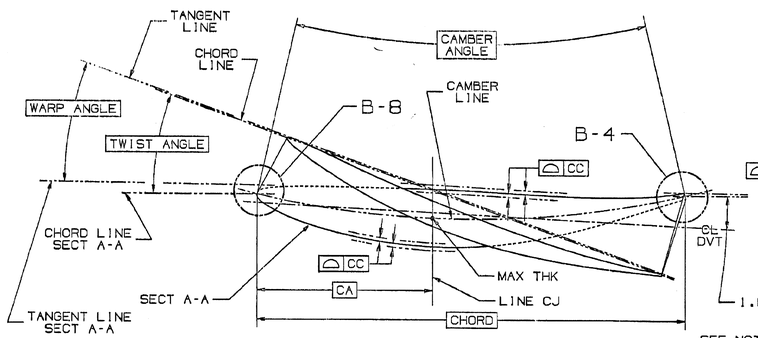

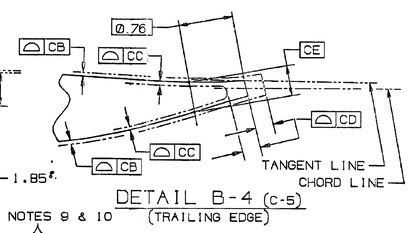

DETAIL B-4 (C-5)
(TRAILING EDGE)

SEE NOTES 9 & 10

SECTION	SECTION HEIGHT	CHORD	PERCENT THICKNESS	CAMBER ANGLE	TWIST ANGLE	WARP ANGLE	THICKNESS AT 'CA'	CA	CB	CC	CD	CE	CF	NRT
A-A	0.00	54.43	17.500	19.000	.000	.000	9.517	21.772	0.079	0.160	0.544	1.176	3.462	0.114
B-B	15.24	54.43	14.000	16.700	2.800	1.637	7.615	21.772	0.064	0.127	0.544	0.939	2.774	0.076
C-C	30.48	54.43	11.400	15.000	5.200	3.174	6.200	21.772	0.051	0.104	0.544	0.767	2.261	0.076
D-D	45.72	54.43	9.800	13.500	7.400	4.970	5.330	21.772	0.046	0.089	0.544	0.658	1.946	0.076
E-E	73.66	54.43	7.400	11.400	10.200	7.102	4.049	21.772	0.038	0.076	0.544	0.556	1.471	0.076

-C-	F-4	1
-B-	F-ft	1
-A-	F-8	1
DATUM	ZONE	SHEET

MATL HY10996 (C450)OWSA VAR 01	-	10
COAT PER ITEM 7 OWSA VAR 01	P3	03
COAT PER ITEM 6 OWSA VAR 01	P2	02
MATL HY10988 (AISI 403 Cb)	P1	0
DESCRIPTION	REF	VAR

MATING PART REFERENCE DATA	
POINT 'O' Ø	948.44
RIM ANGLE	.000
DOVETAIL ANGLE	35.400

7	COATING, ALUMINUM-INORGANIC	P16A-A63	GT10125
6	COATING, ALUMINUM-INORGANIC	P16A-A95	GT70606
5	ACPT REOT-BLADES & VANES	P29A-A9900	GT10123
4	COMPR VANES-PROCESSING	P3C-A960	GT10033
3	X-Y COORDS (FOR 217X412)	342A1100	GT10357
2	APPLICABLE DWG NOTES	314A5112	GT10607
1	APPLIED PRACTICES	348A9200	HY0230261
IT.	NOMENCLATURE	IDENT	SPECN
LIST OF COMPLEMENTARY DOCUMENTS			

TYPE OF PRODUCT OR NAME OF CUSTOMER/PROJECT: GAS TURBINE FR-6

BHARAT HEAVY ELECTRICALS LIMITED
HYDERABAD

	NAME	SIGN.	DATE
DRN.	SCS	R.Ganesh	24-3-99
CHD.	RS	R.Ganesh	24-3-99
APPD.	KNM	K.Neelam	24-3-99

DEPT. GTD CODE 423 | UNTOL. DIMS. GR. C/M/F | SCALE NTS | WEIGHT (KG) 0.32 | REF. TO ASSY. DRG. NA | ITEM NO. NA | NO.OF ITEMS NA

TITLE: BLADE, ROTOR-STG 17

CARD CODE NA | DRAWING NO. 0-353-05-61009 | REV. 00 | SHT. no 1 NO OF SHT. 1

REV.	DATE	ALTERED	CHD/APPD	ZONE

GENERAL DIMENSIONAL LIMITS,FITS & TOLERANCES AS PER HY0230261

THE INFORMATION ON THIS DOCUMENT IS THE PROPERTY OF BHARAT HEAVY ELECTRICALS LIMITED. IT MUST NOT BE USED DIRECTLY OR INDIRECTLY IN ANY WAY DETRIMENTAL TO THE INTEREST OF THE COMPANY.

INVENTORY NO | SIGN. AND DATE | REF. DRG. NO. 0-353-01 REV-- | COMPUTERIZED DRAWING 09/06/91 1.1E7

THIRD ANGLE PROJECTION

DRG. NO 0-353-05-61011 | SH. 1 OF 1

(ALL DIMENSIONS ARE IN mm)

NOTES:

1. FOR APPLICABLE DRAWING NOTES SEE ITEM 2.

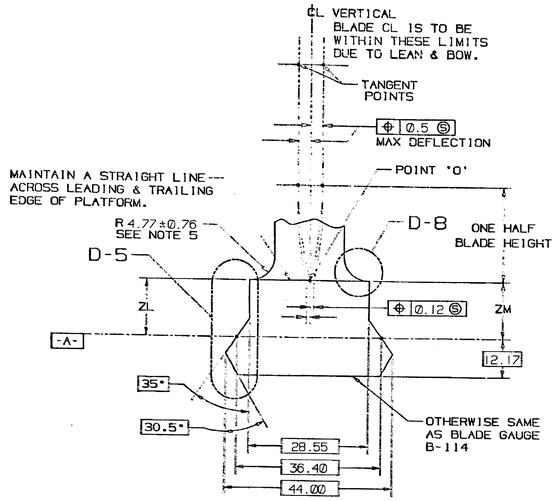

SECTIONS BA-BA, BB-BB & BC-BC (G-3)

SEE NOTE 6

SECTION	ZL ±0.25	ZM ±0.25
BA-BA	8.97	10.10
BB-BB	9.88	9.88
BC-BC	10.08	8.97

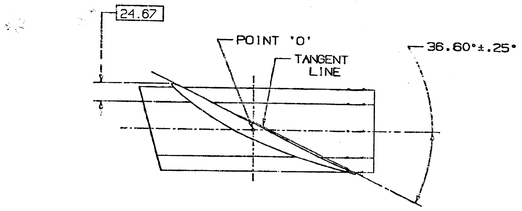

SECTION ZN-ZN (E-3)

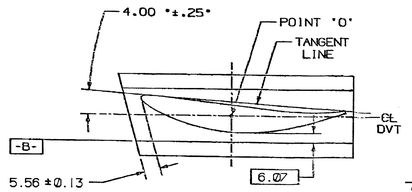

SECTION G-G (D-3)

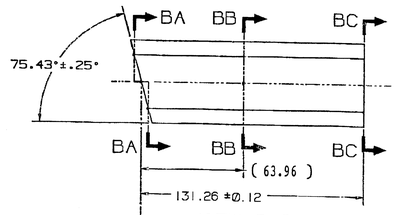

VIEW G-3 (F-3)
(AIRFOIL DELETED FOR CLARITY)

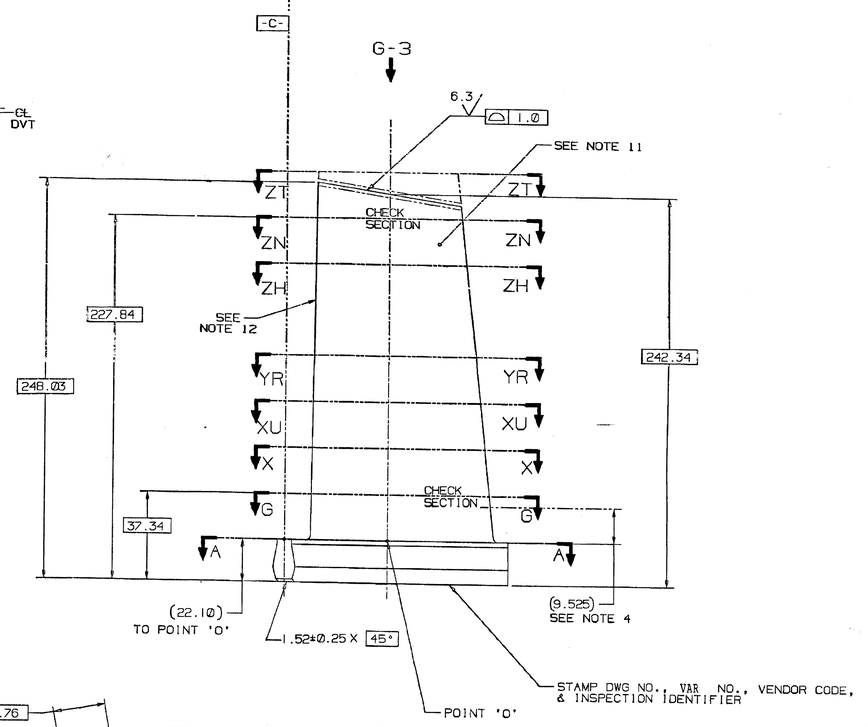

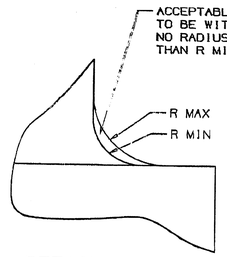

DETAIL D-8 (G-7)

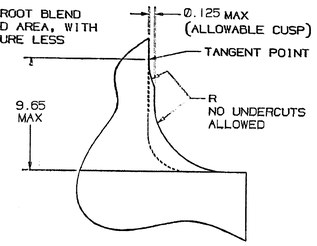

ALTERNATE METHOD OF MANUFACTURE
(REFER TO DETAIL D-8)

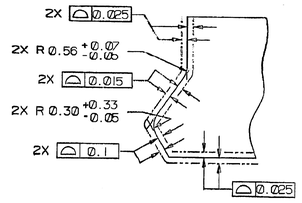

DETAIL D-5 (G-7)

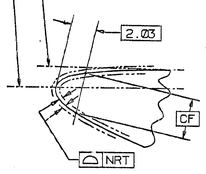

DETAIL B-8 (C-8)
(LEADING EDGE)

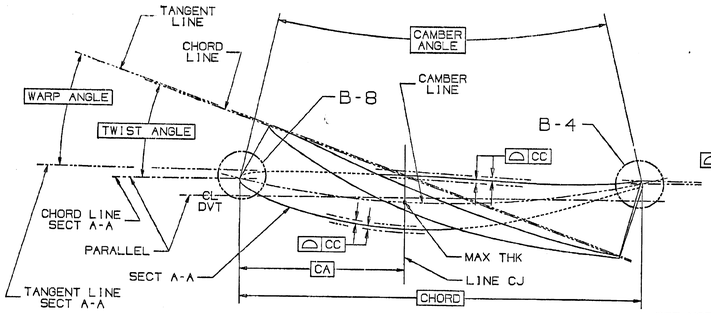

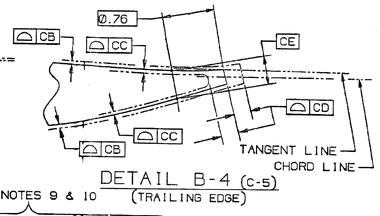

DETAIL B-4 (C-5)
(TRAILING EDGE)

SEE NOTES 9 & 10

SECTION	SECTION HEIGHT	CHORD	PERCENT THICKNESS	CAMBER ANGLE	TWIST ANGLE	WARP ANGLE	THICKNESS AT 'CA'	CA	CB	CC	CD	CE	CF	NRT
A-A	0.000	123.98	13.500	32.000	.000	N/A	16.736	61.989	0.142	0.282	1.240	2.238	2.835	0.119
G-G	15.24	123.98	12.800	29.800	4.000	N/A	15.870	61.989	0.135	0.267	1.240	2.113	2.685	0.111
X-X	50.80	123.98	11.150	24.700	12.500	N/A	13.823	61.989	0.114	0.231	1.240	1.829	2.334	0.094
XU-XU	101.60	123.98	8.800	18.200	22.500	N/A	10.910	61.989	0.091	0.180	1.240	1.435	1.829	0.076
YR-YR	152.40	123.98	6.450	13.000	30.300	N/A	7.996	61.989	0.066	0.132	1.240	1.046	1.336	0.076
ZH-ZH	193.04	123.98	4.600	9.600	35.300	N/A	5.702	61.989	0.046	0.094	1.240	0.744	0.950	0.076
ZN-ZN	205.74	123.98	4.000	8.700	36.600	N/A	4.933	61.989	0.041	0.081	1.240	0.648	0.826	0.076
ZT-ZT	215.90	123.98	3.550	8.000	37.400	N/A	4.402	61.989	0.036	0.071	1.240	0.574	0.734	0.076

-C-	F-4	1
-B-	F-8	1
-A-	F-8	1
DATUM	ZONE	SHEET

MATL HY10996 (C450)	01
DESCRIPTION	VAR

MATING PART REFERENCE DATA	
POINT 'O' Ø	833.92
RIM ANGLE	.000
DOVETAIL ANGLE	75.433

5	ACPT REOT-BLADES & VANES	P29A-A0800	GT10128
4	COMPR VANES-PROCESSING	P3C-A060	GT10083
3	X-Y COORDS (2169966)	324A5255	GT10361
2	APPLICABLE DWG NOTES	314A5112	GT10307
1	APPLIED PRACTICES	348A9200	HY230261
1T.	NOMENCLATURE	IDENT	SPECN

LIST OF COMPLEMENTARY DOCUMENTS

TYPE OF PRODUCT OR NAME OF CUSTOMER/PROJECT: GAS TURBINE FR-6

BHARAT HEAVY ELECTRICALS LIMITED
HYDERABAD

	NAME	SIGN.	DATE	NO. OF VAR.
DRN.	SCS		24-3-99	
CHD.	RS		24-3-99	NA
APPD.	KMM		24-3-99	

DEPT. GTD CODE 423	UNTOL. DIMS. CR C/M/F	SCALE NTS	WEIGHT (KG) 2.4	REF. TO ASSY. DRG. NA	ITEM NO. NA	NO. OF ITEMS NA

TITLE: BLADE ROTOR STG 1

CARD CODE NA | DRAWING NO. 0-353-05-61011 | REV. 00 | SHT. No. 1 | NO OF SHT. 1

REV.	DATE	ALTERED	CHD/APPD

ZONE

THE INFORMATION ON THIS DOCUMENT IS THE PROPERTY OF BHARAT HEAVY ELECTRICALS LIMITED. IT MUST NOT BE USED DIRECTLY OR INDIRECTLY IN ANY WAY DETRIMENTAL TO THE INTEREST OF THE COMPANY

GENERAL DIMENSIONAL LIMITS, FITS & TOLERANCES AS PER HY0230261

SIGN AND DATE | REF DRG. NO. 16PE5170 REV-- | CONVERTED AT HWE 03056111.STEP

INVENTOR NO

THIRD ANGLE PROJECTION

(ALL DIMENSIONS ARE IN mm)

DRG. NO. 0-353-05-61013 | SH. 1 OF 1

NOTES:

1. FOR APPLICABLE DRAWING NOTES SEE ITEM 2.

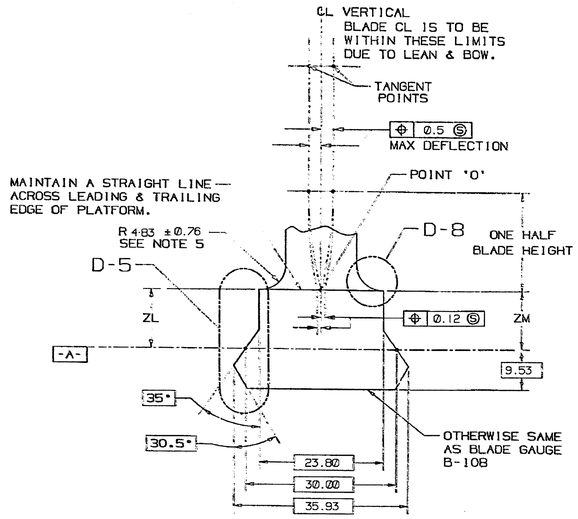

SECTIONS BA-BA, BB-BB & BC-BC (G-3)

SEE NOTE 6

SECTION	ZL ±0.25	ZM ±0.25
BA-BA	7.19	7.87
BB-BB	7.75	7.75
BC-BC	7.85	7.06

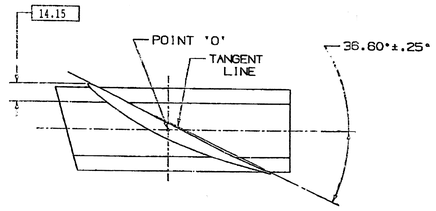

SECTION S-E (E-3)

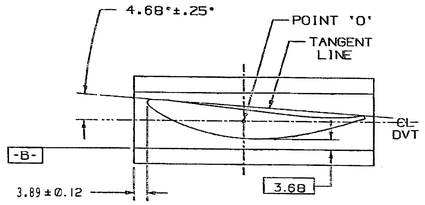

SECTION B-B (D-3)

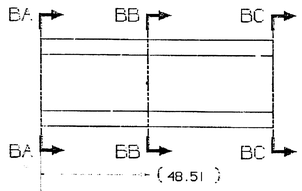

VIEW G-3 (F-3)
(AIRFOIL DELETED FOR CLARITY)

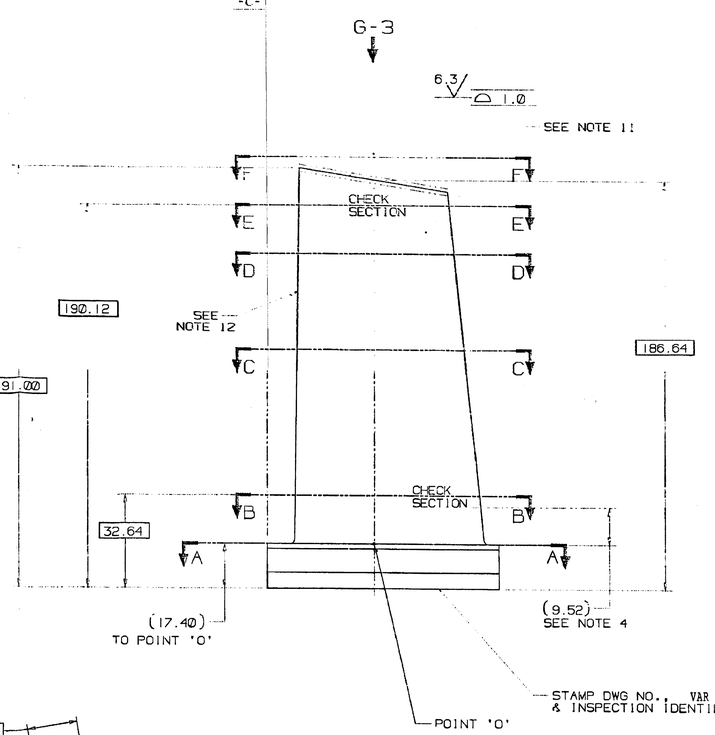

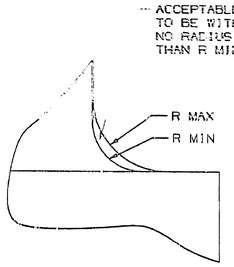

DETAIL D-8 (G-7)

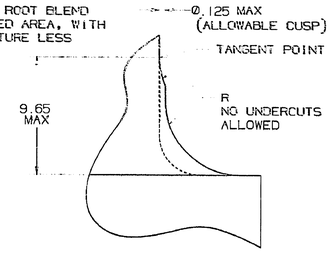

ALTERNATE METHOD OF MANUFACTURE
(REFER TO DETAIL D-8)

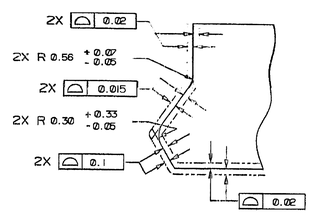

DETAIL D-5 (G-7)

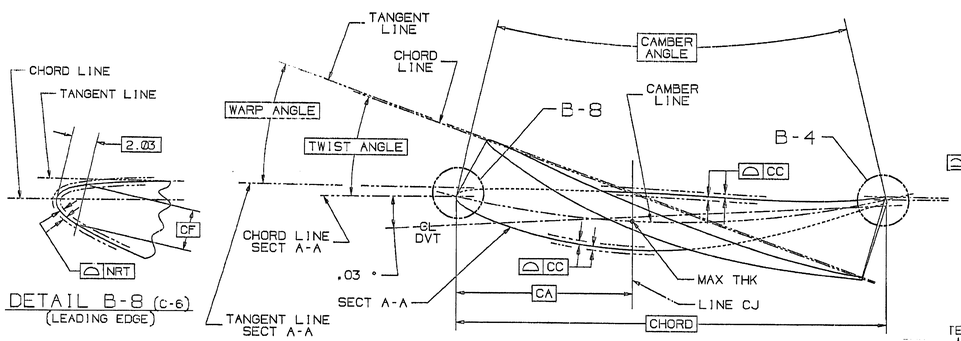

DETAIL B-8 (C-6)
(LEADING EDGE)

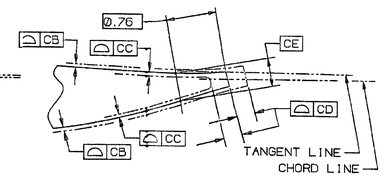

DETAIL B-4 (C-5)
(TRAILING EDGE)

SECTION	SECTION HEIGHT	CHORD	PERCENT THICKNESS	CAMBER ANGLE	TWIST ANGLE	WARP ANGLE	THICKNESS AT 'CA'	CA	CB	CC	CD	CE	CF	NRT
A-A	0.00	99.187	13.500	37.000	.000	.000	13.380	39.675	0.112	0.223	0.990	1.572	3.647	0.125
B-B	15.24	99.187	12.700	34.000	4.384	4.400	12.590	39.675	0.104	0.210	0.992	1.481	3.444	0.109
C-C	101.60	99.187	8.250	21.200	24.271	24.234	8.176	39.675	0.060	0.137	0.990	0.963	2.263	0.076
D-D	152.40	99.187	5.630	15.800	31.706	31.567	5.580	39.675	0.046	0.094	0.990	0.658	1.549	0.076
E-E	172.72	99.187	4.580	13.900	34.250	34.067	4.541	39.675	0.038	0.076	0.990	0.538	1.260	0.076
F-F	190.50	99.187	3.650	12.300	36.642	36.397	3.660	39.675	0.038	0.076	0.990	0.531	1.008	0.076

-C-	F-4	1
-B-	F-6	1
-A-	F-8	1
DATUM	ZONE	SHEET

MATL HY10996 (C450)OWSA VAR 01	-	10
COAT PER ITEM 7 OWSA VAR 01	P3	03
COAT PER ITEM 6 OWSA VAR 01	P2	02
MATL HY10988 (AISI 403 CD)	P1	01
DESCRIPTION	REF	VAR

MATING PART REFERENCE DATA	
POINT 'O' Ø	833.93
RIM ANGLE	.000
DOVETAIL ANGLE	75.433

7	COATING, ALUMINUM-INORGANIC	P16A-AG3	GT10125
6	COATING, ALUMINUM-INORGANIC	P16A-AG5	GT10606
5	ACPT REOT-BLADES & VANES	P29A-AG800	GT10128
4	COMPR VANES-PROCESSING	P3C-AG60	GT10783
3	X-Y COORDS (217X369)	324A5244	GT10560
2	APPLICABLE DWG NOTES	314A5112	GT10607
1	APPLIED PRACTICES	34BA9200	HY030261
IT.	NOMENCLATURE	IDENT	SPCEN
	LIST OF COMPLEMENTARY DOCUMENTS		

TYPE OF PRODUCT OR NAME OF CUSTOMER/PROJECT: GAS TURBINE FR-6

BHARAT HEAVY ELECTRICALS LIMITED
HYDERABAD

	NAME	SIGN.	DATE	NO. OF VAR.
DRN.	SCS		24-3-99	
CHD.	RS		24-3-99	NA
APPD.	KMM		24-3-99	

DEPT.	GTD	UNTO... DIMS.	SCALE	WEIGHT (KG)	REF. TO ASSY. DRG.	ITEM NO.	NO. OF ITEMS
CODE	423	GR. G/W/F	NTS	1.23	NA	NA	NA

TITLE: BLADE, ROTOR-STG 3

CARD CODE: NA | DRAWING NO. 0-353-05-61013 | REV. 00 | SHT. No 1 | NO OF SHT. 1

REV.	DATE	ALTERED	CHD/APPD

ZONE

THE INFORMATION ON THIS DOCUMENT IS THE PROPERTY OF BHARAT HEAVY ELECTRICALS LIMITED. IT MUST NOT BE USED DIRECTLY OR INDIRECTLY IN ANY WAY DETRIMENTAL TO THE INTEREST OF THE COMPANY

GENERAL DIMENSIONAL LIMITS, FITS & TOLERANCES AS PER HY030261

SIGN. AND DATE | REF. DRG. NO. 1198217 | COMPUTER FILE NAME 0353611.TIFF

INVENTORY NO

THIRD ANGLE PROJECTION

(ALL DIMENSIONS ARE IN mm)

SH. 1 OF 1 DRG. NO. 0-353Ø5-61014

NOTES:

1. FOR APPLICABLE DRAWING NOTES SEE ITEM 2.

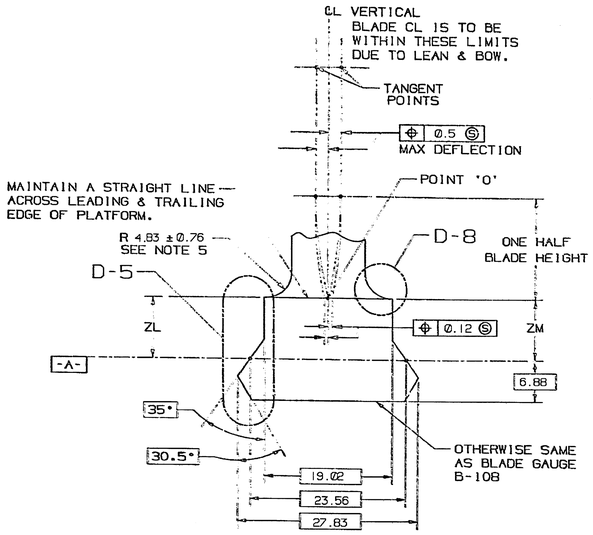

SECTIONS BA-BA, BB-BB & BC-BC (G-3)

SEE NOTE 6

SECTION	ZL ±0.25	ZM ±0.25
BA-BA	5.51	6.04
BB-BB	5.97	5.97
BC-BC	6.02	5.38

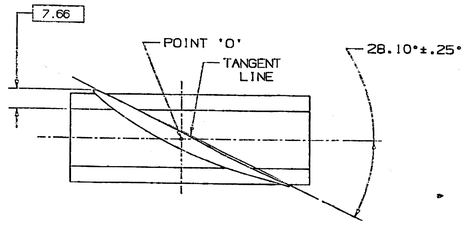

SECTION C-C (E-3)

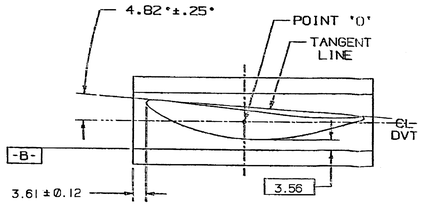

SECTION B-B (D-3)

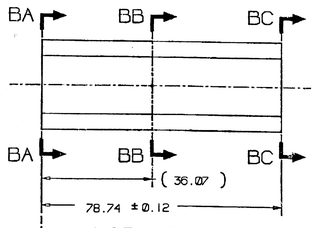

VIEW G-3 (F-3)
(AIRFOIL DELETED FOR CLARITY)

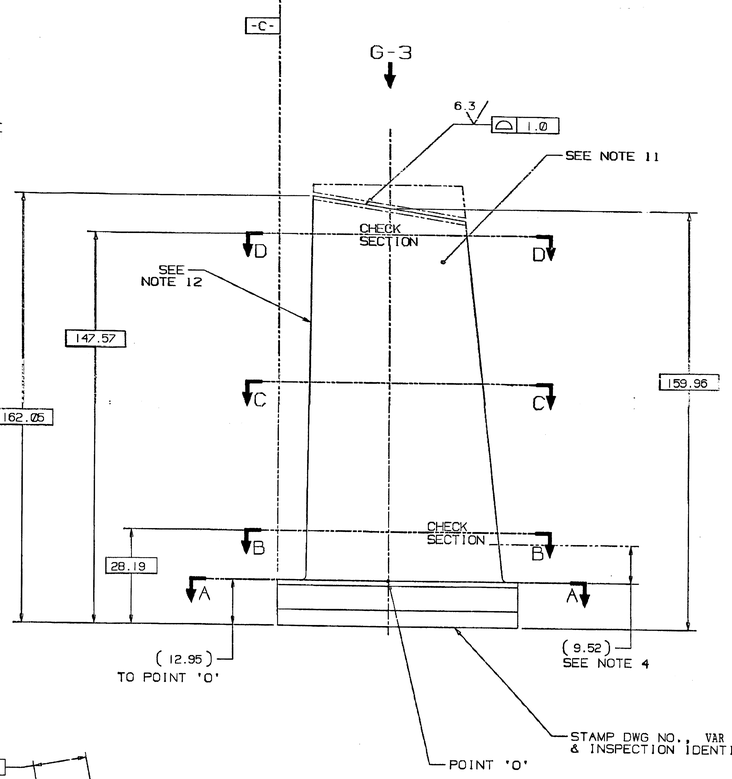

-C-	F-4	1
-B-	F-R	1
-A-	F-B	1
DATUM	ZONE	SHEET

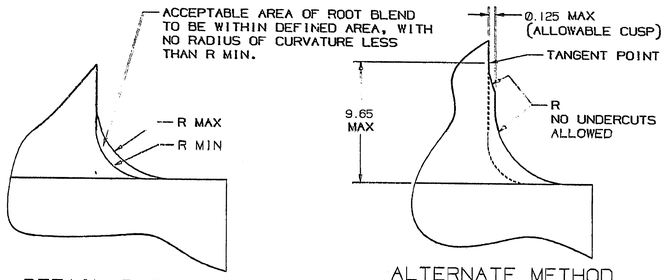

DETAIL D-8 (G-7)

ALTERNATE METHOD OF MANUFACTURE
(REFER TO DETAIL D-8)

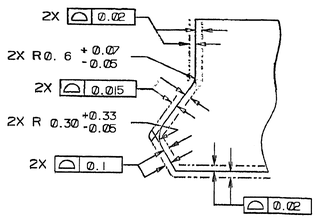

DETAIL D-5 (G-7)

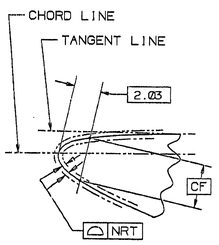

DETAIL B-8 (C-6)
(LEADING EDGE)

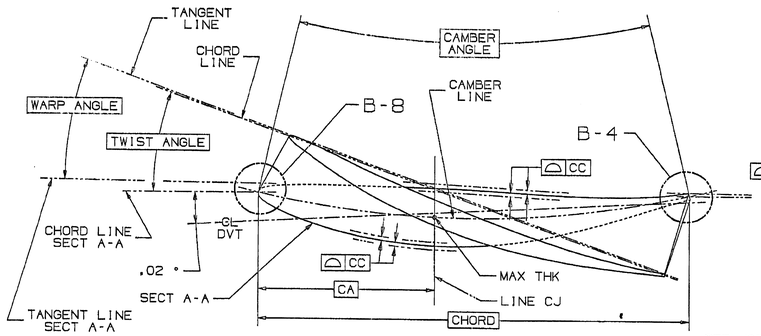

SEE NOTES 9 & 10

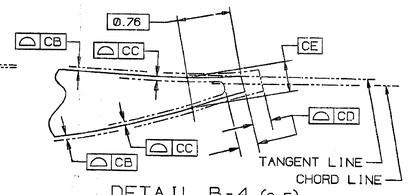

DETAIL B-4 (C-5)
(TRAILING EDGE)

SECTION	SECTION HEIGHT	CHORD	PERCENT THICKNESS	CAMBER ANGLE	TWIST ANGLE	WARP ANGLE	THICKNESS AT 'CA'	CA	CB	CC	CD	CE	CF	NRT
A-A	0.000	72.14	13.500	36.000	.000	.000	9.730	25.854	0.081	0.163	0.721	1.168	3.053	0.090
B-B	15.24	72.14	12.710	33.000	4.484	4.500	9.162	25.854	0.076	0.152	0.721	1.100	2.885	0.081
C-C	71.12	72.14	9.820	22.800	17.947	18.000	7.079	25.854	0.058	0.117	0.721	0.851	2.250	0.076
D-D	134.62	72.14	6.530	16.100	27.875	27.783	4.707	25.854	0.038	0.079	0.721	0.566	1.501	0.076

MATL HY10996 (C450)OMSA VAR 01	-	10
COAT PER ITEM 7 OMSA VAR 01	P3	03
COAT PER ITEM 6 OMSA VAR 01	P2	02
MATL HY10988 (AISI 403 Cb)	P1	01
DESCRIPTION	REF	VAR

MATING PART REFERENCE DATA

POINT 'O' Ø	833.93
RIM ANGLE	.000
DOVETAIL ANGLE	72.733

7	COATING, ALUMINUM-INORGANIC	P16A-AG3	GT10125
6	COATING, ALUMINUM-INORGANIC	P16A-AG5	GT10608
5	ACPT REQT-BLADES & VANES	P29A-AG900	GT10128
4	COMPR VANES-PROCESSING	P3C-AG60	GT10253
3	X-Y COORDS [217X370]	324A5245	GT10559
2	APPLICABLE DWG NOTES	314A5112	GT10607
1	APPLIED PRACTICES	348A9200	HY023026I
IT.	NOMENCLATURE	IDENT	SPECN

LIST OF COMPLEMENTARY DOCUMENTS

TYPE OF PRODUCT OR NAME OF CUSTOMER/PROJECT: GAS TURBINE FR-6

BHARAT HEAVY ELECTRICALS LIMITED, HYDERABAD

	NAME	SIGN.	DATE	NO. OF VAR.
DRN.	SCS		24-3-99	NA
CHD.	RS		24-3-99	
APPD.	FNM		24-3-99	

DEPT. GTD CODE 423 | UNTOL. DIMS. CR. C/M/F | SCALE NTS | WEIGHT (KG) 0.55 | REF. TO ASSY. DRG. NA | ITEM NO. NA | NO. OF ITEMS NA

TITLE: BLADE, ROTOR-STG 4

CARD CODE NA | DRAWING NO. 0-353-05-61014 | REV. 00 | SHT. No 1 | NO OF SHT. 1

REV.	DATE	ALTERED	CHD/APPD

ZONE

THE INFORMATION ON THIS DOCUMENT IS THE PROPERTY OF BHARAT HEAVY ELECTRICALS LIMITED. IT MUST NOT BE USED DIRECTLY OR INDIRECTLY IN ANY WAY DETRIMENTAL TO THE INTEREST OF THE COMPANY

GENERAL DIMENSIONAL LIMITS, FITS & TOLERANCES AS PER HY023026I

SIGN. AND DATE | REF DWG. NO. 1095173 REV '-' | DRAWING NO. AND NAME 03056141.11IT

INVENTORY NO

THIRD ANGLE PROJECTION

(ALL DIMENSIONS ARE IN mm)

DRG. NO. 0-353-05-61015 SH. 1 OF 1

NOTES:

1. FOR APPLICABLE DRAWING NOTES SEE ITEM 2.

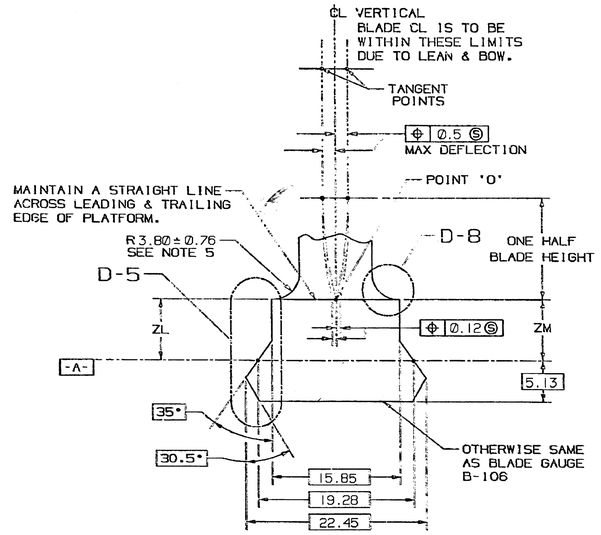

SECTIONS BA-BA, BB-BB & BC-BC (G-3)

SEE NOTE 6

SECTION	ZL ±0.25	ZM ± 0.25
BA-BA	5.23	4.88
BB-BB	5.64	4.80
BC-BC	5.54	4.14

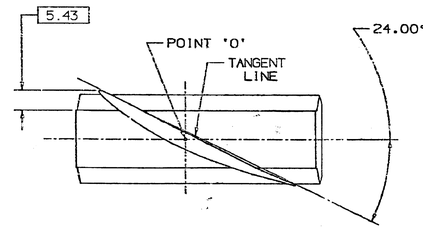

SECTION D-D (E-3)

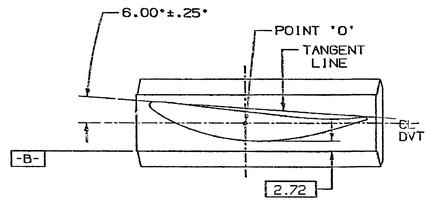

SECTION B-B (D-3)

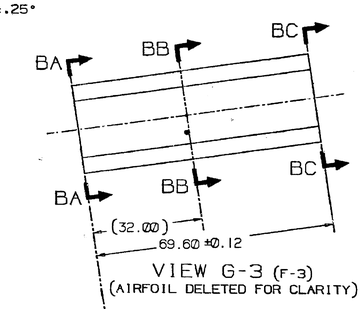

VIEW G-3 (F-3)
(AIRFOIL DELETED FOR CLARITY)

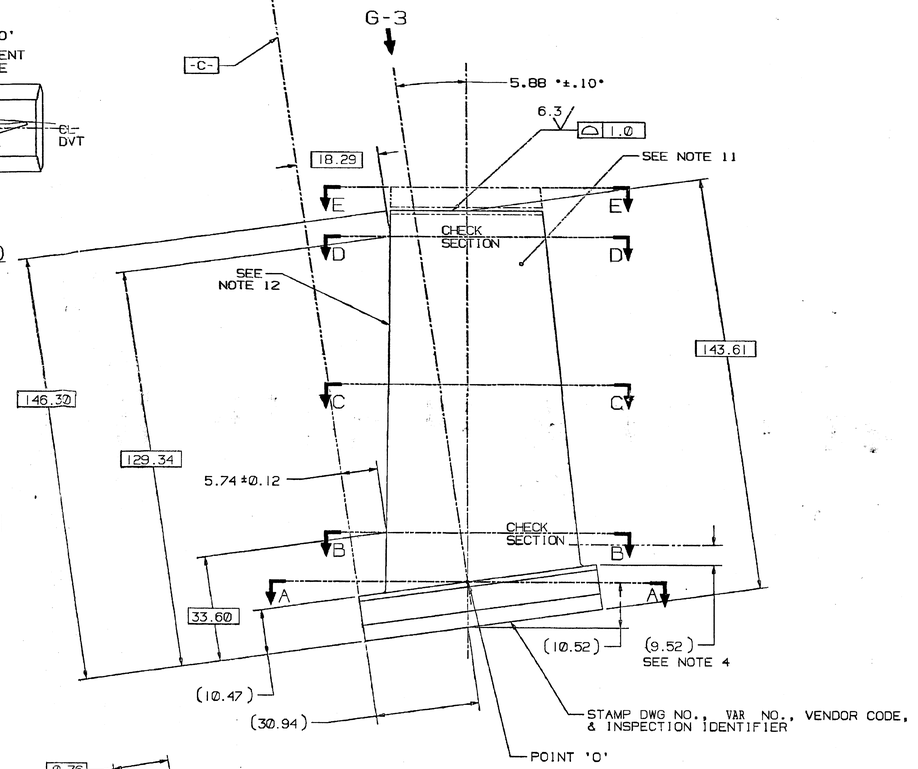

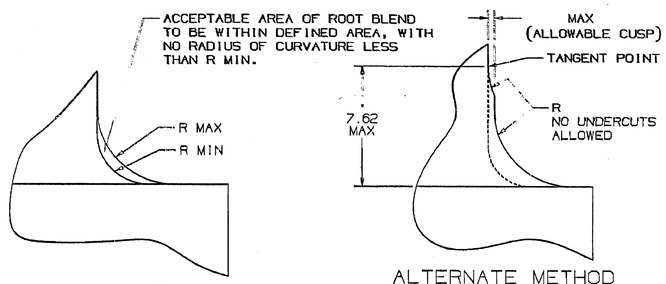

DETAIL D-8 (G-7)

ALTERNATE METHOD OF MANUFACTURE
(REFER TO DETAIL D-8)

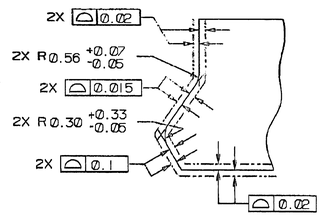

DETAIL D-5 (G-7)

-C-	F-4	1
-B-	F-R	1
-A-	F-B	1
DATUM	ZONE	SHEET

MATL HY10996 (C450) OWSA VAR 01	-	10
COAT PER ITEM 7 OWSA VAR 01	P3	03
COAT PER ITEM 6 - OWSA VAR 01	P2	02
MATL HY10988 (AISI 403 Cb)	P1	01
DESCRIPTION	REF	VAR

MATING PART REFERENCE DATA	
POINT 'O' Ø	847.04
RIM ANGLE	6.767
DOVETAIL ANGLE	63.900

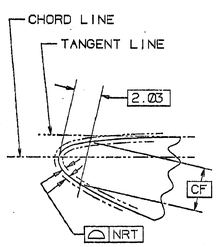

DETAIL B-8 (C-6)
(LEADING EDGE)

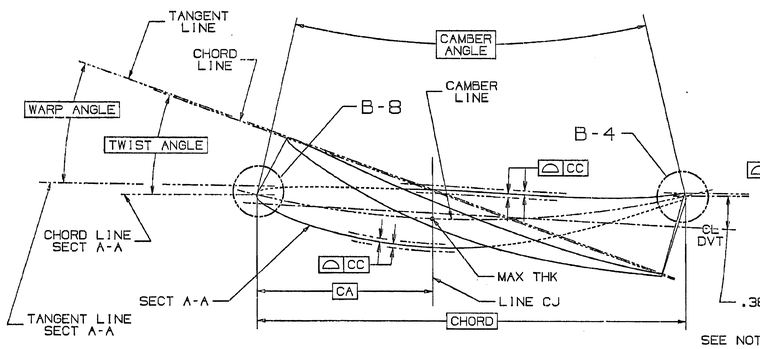

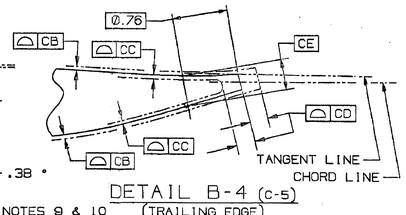

DETAIL B-4 (C-5)
(TRAILING EDGE)

SEE NOTES 9 & 10

SECTION	SECTION HEIGHT	CHORD	PERCENT THICKNESS	CAMBER ANGLE	TWIST ANGLE	WARP ANGLE	THICKNESS AT 'CA'	CA	CB	CC	CD	CE	CF	NRT
A-A	0.00	63.5	13.500	33.250	.000	.000	8.565	25.400	0.071	0.142	0.635	1.039	2.860	0.079
B-B	20.32	63.5	12.600	29.500	5.959	6.000	7.996	25.400	0.066	0.135	0.635	0.970	2.700	0.076
C-C	76.20	63.5	10.000	21.500	17.642	17.700	6.345	25.400	0.053	0.107	0.635	0.772	2.141	0.076
D-D	116.84	63.5	8.700	17.000	23.886	24.000	5.519	25.400	0.046	0.091	0.635	0.671	1.869	0.076
E-E	137.16	63.5	7.200	15.200	26.692	26.650	4.569	25.400	0.038	0.076	0.635	0.556	1.547	0.076

7	COATING, ALUMINUM-INORGANIC	P16A-AG3	GT10125
6	COATING, ALUMINUM-INORGANIC	P16A-AG5	GT10606
5	ACPT REOT-BLADES & VANES	P29A-AG900	GT10128
4	COMPR VANES-PROCESSING	P3C-AG60	GT10083
3	X-Y COORDS (217X367)	324A5242	GT10358
2	APPLICABLE DWG NOTES	314A5112	GT10607
1	APPLIED PRACTICES	348A9200	HY0230261
IT.	NOMENCLATURE	IDENT	SPCEN

LIST OF COMPLEMENTARY DOCUMENTS

TYPE OF PRODUCT OR NAME OF CUSTOMER/PROJECT: GAS TURBINE FR-6

BHARAT HEAVY ELECTRICALS LIMITED
HYDERABAD

	NAME	SIGN.	DATE	NO. OF VAR.
DRN.	SCS		24-3-99	
CHD.	RS		24-3-99	NA
APPD.	KMM		24-3-99	

DEPT.	UNTOL. DIMS.	SCALE	WEIGHT (KG)	REF. TO ASSY. DRG.	ITEM NO.	NO. OF ITEMS
GTD CODE 423	GR. C/M/F	NTS	0.41	NA	NA	NA

TITLE: BLADE, ROTOR-STG 5

CARD CODE: NA

DRAWING NO. 0-353-05-61015 REV. 00

SHT. No 1 NO OF SHT. 1

REV.	DATE	ALTERED	CHD/APPD	ZONE

THE INFORMATION ON THIS DOCUMENT IS THE PROPERTY OF BHARAT HEAVY ELECTRICALS LIMITED. IT MUST NOT BE USED DIRECTLY OR INDIRECTLY IN ANY WAY DETRIMENTAL TO THE INTEREST OF THE COMPANY

GENERAL DIMENSIONAL LIMITS, FITS & TOLERANCES AS PER HY0230261

SIGN AND DATE | REF DRG. NO. 0-353-14 REF-1 | CONTROL NO. 0-353-61.1EF

INVENTORY NO

THIRD ANGLE PROJECTION

(ALL DIMENSIONS ARE IN mm)

DRG. NO. 0-353-05-91001 SH. 1 OF 1

DRAWING		PRECISION MASTER	
PT NO	REV	DWG NO	REV
1	—	217X239	—

NOTES:

1. FOR APPLICABLE DRAWING NOTES SEE ITEM 2.

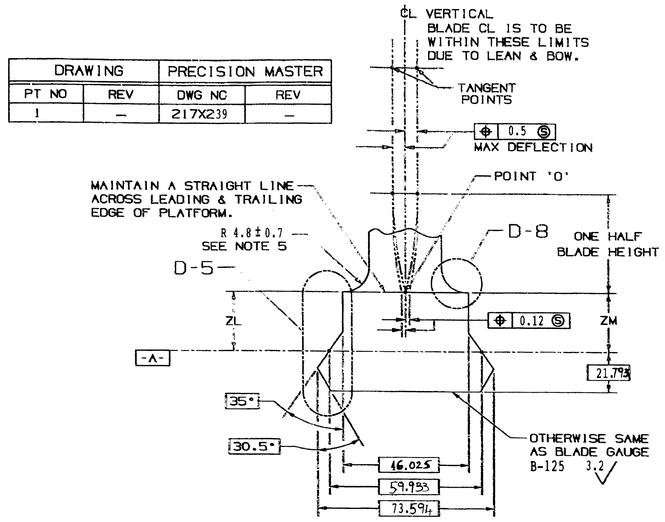

SECTIONS BA-BA, BB-BB & BC-BC (G-3)

SEE NOTE 6

SECTION	ZL ± 0.2	ZM ± 0.2
BA-BA	15.6	17.4
BB-BB	17.1	17.1
BC-BC	17.4	15.6

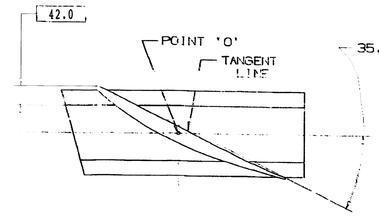

SECTION F-F (E-3)

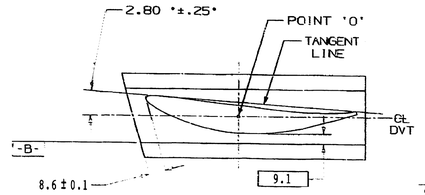

SECTION B-B (D-3)

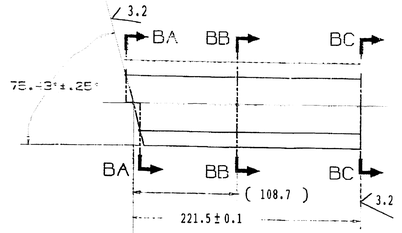

VIEW G-3 (F-3)
(AIRFOIL DELETED FOR CLARITY)

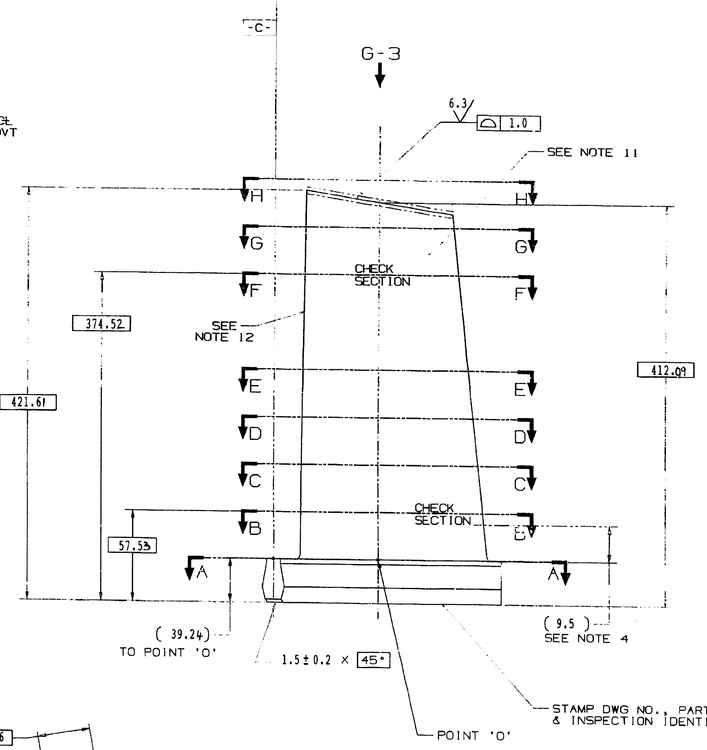

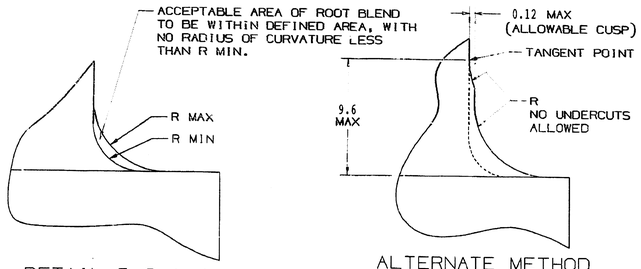

DETAIL D-8 (G-7)

ALTERNATE METHOD OF MANUFACTURE
(REFER TO DETAIL D-8)

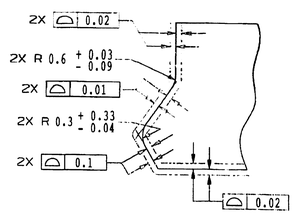

DETAIL D-5 (G-7)

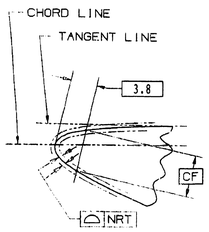

DETAIL B-8 (C-6)
(LEADING EDGE)

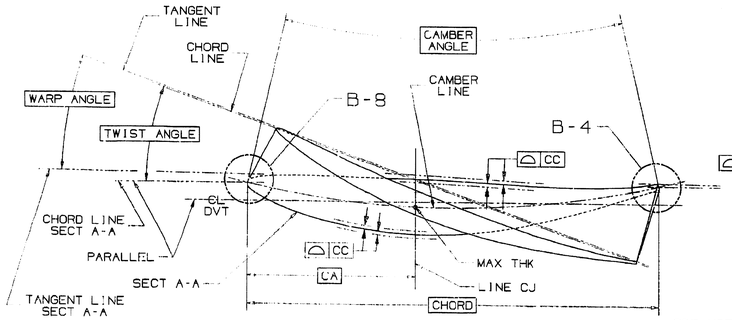

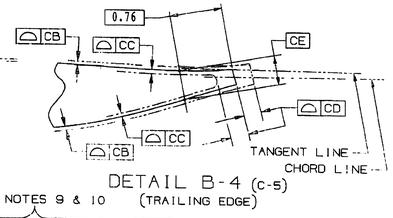

DETAIL B-4 (C-5)
(TRAILING EDGE)

SEE NOTES 9 & 10

SECTION	SECTION HEIGHT	CHORD	PERCENT THICKNESS	CAMBER ANGLE	TWIST ANGLE	WARP ANGLE	THICKNESS AT 'CA'	CA	CB	CC	CD	CE	CF	NRT
A-A	000.0	210.74	13.500	32.000	.000	N/A	28.45	105.372	0.24	0.48	1.05	3.56	4.98	0.20
B-B	018.28	210.74	13.004	30.450	2.800	N/A	27.40	105.372	0.23	0.46	1.05	3.41	4.8	0.19
C-C	091.44	210.74	11.021	24.350	13.000	N/A	23.23	105.372	0.19	0.39	1.05	2.87	4.05	0.15
D-D	182.88	210.74	8.543	17.500	23.500	N/A	18.00	105.372	0.14	0.30	1.05	2.21	3.12	0.11
E-E	274.32	210.74	6.064	12.200	31.500	N/A	12.78	105.372	0.10	0.21	1.05	1.56	2.21	0.07
F-F	335.28	210.74	4.411	9.350	35.600	N/A	09.30	105.372	0.076	0.15	1.05	1.13	1.6	0.07
G-G	365.76	210.74	3.585	8.000	37.300	N/A	07.55	105.372	0.06	0.12	1.05	0.92	1.3	0.07
H-H	384.05	210.74	3.100	7.217	38.200	N/A	06.53	105.372	0.05	0.11	1.05	0.80	1.13	0.07

MATING PART REFERENCE DATA	
POINT 'O' Ø	1417.68
RIM ANGLE	.000
DOVETAIL ANGLE	75.433

5	ACPT REOT-BLADES & VANES	P29A-A9900	GT10128
4	COMPR VANES-PROCESSING	P3C-A660	GT10083
3	X-Y COORDS	287A7859	GT10653
2	APPLICABLE DWG NOTES	314A5112	GT10459
1	APPLIED PRACTICES	34BA9200	HY230261
IT.	NOMENCLATURE	IDENT	BHEL SPEC
LIST OF COMPLEMENTARY DOCUMENTS			

THE INFORMATION ON THIS DOCUMENT IS THE PROPERTY OF BHARAT HEAVY ELECTRICALS LIMITED. IT MUST NOT BE USED DIRECTLY OR INDIRECTLY IN ANY WAY DETRIMENTAL TO THE INTEREST OF THE COMPANY

GENERAL DIMENSIONAL LIMITS,FITS & TOLERANCES AS PER HY230261

SIGN. AND DATE | REF. DWG. NO. 10995123 REV 'A' | COMPUTER FILE NAME 0353995101-050-089.prt

INVENTORY NO

REV.	DATE	ALTERED CHD/APPD
ZONE		

TYPE OF PRODUCT OR NAME OF CUSTOMER/PROJECT

BHARAT HEAVY ELECTRICALS LIMITED
HYDERABAD

	NAME	SIGN.	DATE	NO.OF VAR.
DRN.	SCS		4.1.2000	NA
CHD.	SKR		4.1.2000	
APPD.	SSR		4.1.2000	

DEPT.	UNTOL. DIMS. OR	SCALE	WEIGHT (KG)	REF. TO ASSY. DRG.	ITEM NO.	NO.OF ITEMS
STG CODE 423		NA	11.82	NA	NA	NA

TITLE: BLADE ROTOR STG 1

CARD CODE

DRAWING NO. 0-353-05-91001 REV. 00

SHT. no 1 NO OF SHT. 1

THIRD ANGLE PROJECTION

(ALL DIMENSIONS ARE IN mm)

DRG. NO. 0-353-05-91003 SH. 1 OF 1

DRAWING		PRECISION MASTER	
PT NO	REV	DWG NO	REV
1	—	217X240	—

NOTES:

1. FOR APPLICABLE DRAWING NOTES SEE ITEM 2.

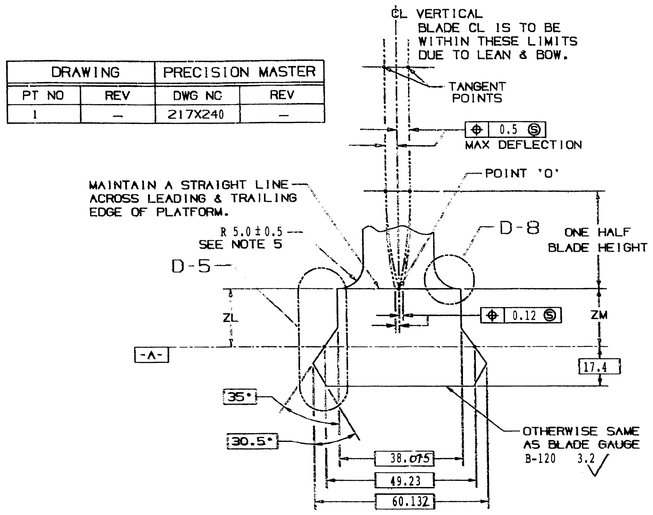

SECTIONS BA-BA, BB-BB & BC-BC (G-3)

SEE NOTE 6

SECTION	ZL ± 0.2	ZM ± 0.2
BA-BA	15.8	16.9
BB-BB	16.6	16.6
BC-BC	16.8	15.5

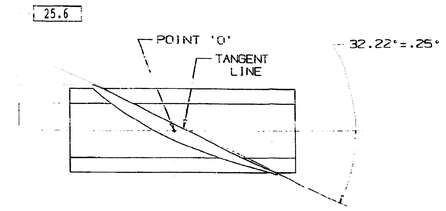

SECTION F-F (E-3)

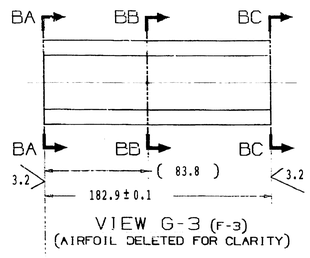

VIEW G-3 (F-3)
(AIRFOIL DELETED FOR CLARITY)

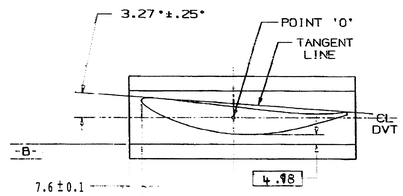

SECTION B-B (D-3)

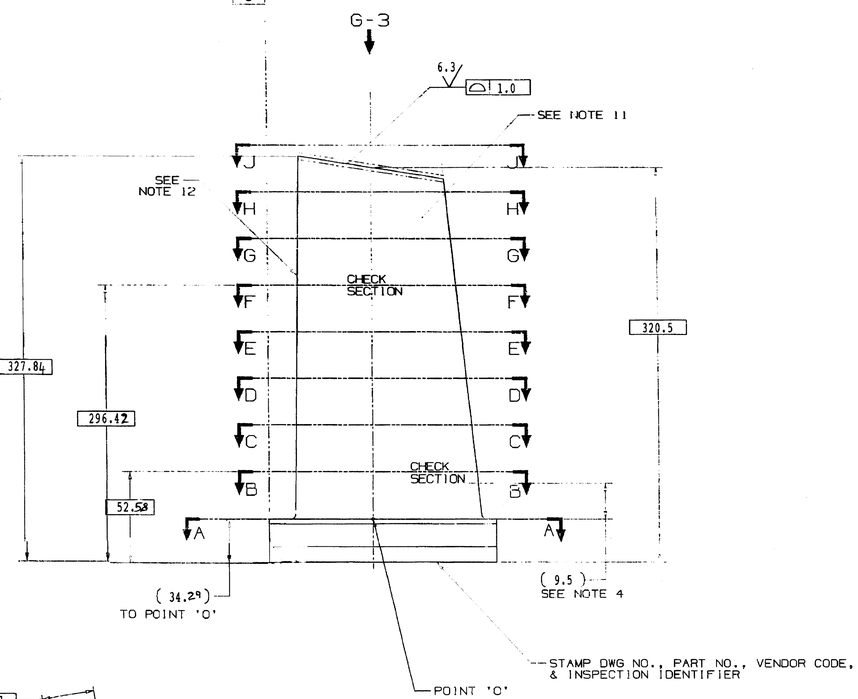

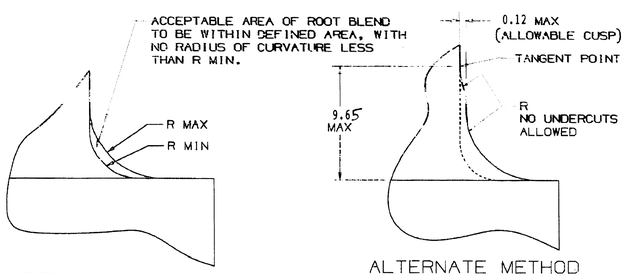

DETAIL D-8 (G-7)

ALTERNATE METHOD OF MANUFACTURE
(REFER TO DETAIL D-8)

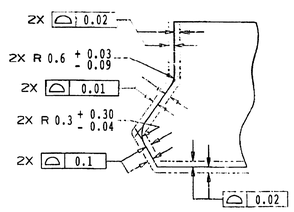

DETAIL D-5 (G-7)

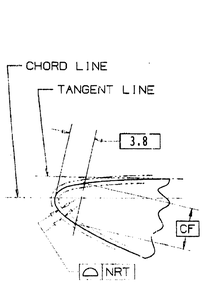

DETAIL B-8 (C-6)
(LEADING EDGE)

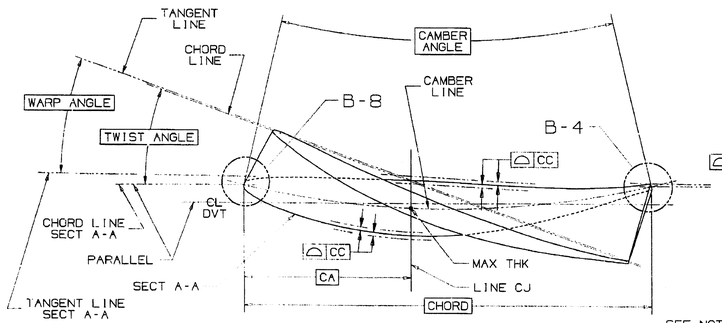

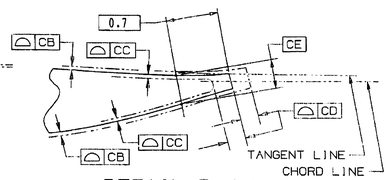

DETAIL B-4 (C-5)
(TRAILING EDGE)

SEE NOTES 9 & 10

SECTION	SECTION HEIGHT	CHORD	PERCENT THICKNESS	CAMBER ANGLE	TWIST ANGLE	WARP ANGLE	THICKNESS AT 'CA'	CA	CB	CC	CD	CE	CF	NRT
A-A	00.00	168.63	13.500	37.000	.000	.000	22.75	67.452	0.19	0.38	1.69	2.61	6.469	0.21
B-B	18.29	168.63	12.945	35.000	3.000	3.009	21.81	67.452	0.18	0.36	1.69	2.51	6.218	0.19
C-C	073.15	168.63	11.279	29.500	11.800	11.815	19.001	67.452	0.16	0.32	1.69	2.19	5.468	0.13
D-D	128.02	168.63	9.613	24.500	19.100	19.100	16.20	67.452	0.13	0.27	1.69	1.86	4.663	0.1
E-E	182.88	168.63	7.947	20.300	25.000	24.959	13.39	67.452	0.11	0.22	1.69	1.54	3.866	0.07
F-F	262.13	168.63	5.541	15.600	32.100	31.958	09.34	67.452	0.08	0.15	1.69	1.07	2.703	0.07
G-G	298.70	168.63	4.430	13.800	34.700	34.510	7.47	67.452	0.06	0.12	1.69	0.86	2.164	0.07
H-H	323.09	168.63	3.690	12.700	36.300	36.083	6.22	67.452	0.05	0.10	1.69	0.72	1.803	0.07
J-J	338.33	168.63	3.250	12.000	37.283	37.050	5.48	67.452	0.046	0.09	1.69	0.63	1.588	0.07

MATING PART REFERENCE DATA	
POINT 'O' Ø	1417.68
RIM ANGLE	.000
DOVETAIL ANGLE	75.433

5	ACPT REOT-BLADES & VANES	P29A-AG900	GT10128
4	COMPR VANES-PROCESSING	P3C-AG60	GT10083
3	X-Y COORDS	287A7860	GT10656
2	APPLICABLE DWG NOTES	314A5112	GT10459
1	APPLIED PRACTICES	348A9200	HY230261
IT.	NOMENCLATURE	IDENT	BREL SPEC

LIST OF COMPLEMENTARY DOCUMENTS

THE INFORMATION ON THIS DOCUMENT IS THE PROPERTY OF THE COMPANY. IT MUST NOT BE USED DIRECTLY OR INDIRECTLY IN ANY WAY DETRIMENTAL TO THE INTEREST OF THE COMPANY

GENERAL DIMENSIONAL LIMITS, FITS & TOLERANCES AS PER HY0230261

SIGN. AND DATE | REF. DRG. NO. 109E5125 REV A' | COMPUTER FILE NAME 235395103-E90-281.FTF | INVENTORY NO

TYPE OF PRODUCT OR

NAME OF CUSTOMER/PROJECT

	NAME	SIGN.	DATE	NO. OF VAR.
DRN.	SCS		4.1.2000	
CHK.	SKR		4.1.2000	NA
APPD.	SSR		4.1.2000	

DEPT. GTD CODE	UNTOL. DIMS. GR.	SCALE	WEIGHT (KG)	REF. TO ASSY. DRG.	ITEM NO.	NO. OF ITEMS
423		NA	6.4	NA	NA	NA

TITLE: BLADE ROTOR STG 3

CARD CODE | DRAWING NO. 0-353-05-91003 | REV. 00 | SHT. No. 1 | NO OF SHT. 1

REV.	DATE	ALTERED	CHD/APPD

THIRD ANGLE PROJECTION

(ALL DIMENSIONS ARE IN mm)

DRG. NO. 0-353-05-91004 SH. 1 OF 1

DRAWING		PRECISION MASTER	
PT NO	REV	DWG NO	REV
1-3	—	217X241	—

NOTES:

1. FOR APPLICABLE DRAWING NOTES SEE ITEM 2.

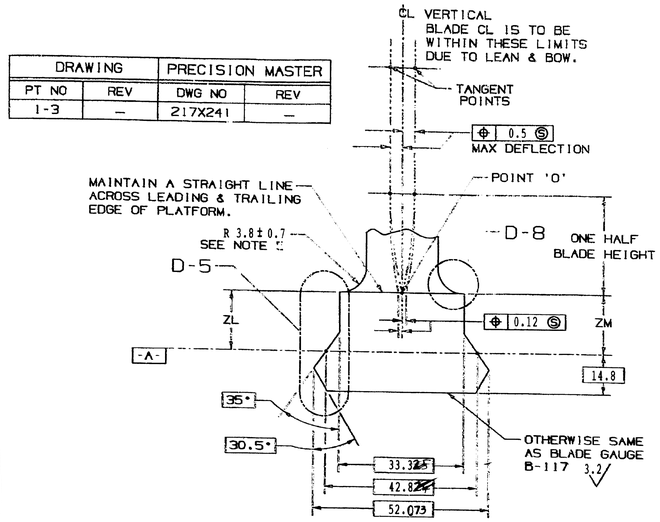

SECTIONS BA-BA, BB-BB & BC-BC (G-3)

SEE NOTE 6

SECTION	ZL ± 0.2	ZM ± 0.2
BA-BA	10.90	11.6
BB-BB	11.4	11.4
BC-BC	11.6	10.77

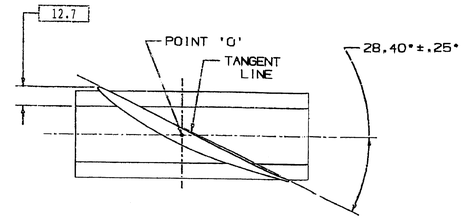

SECTION F-F (E-3)

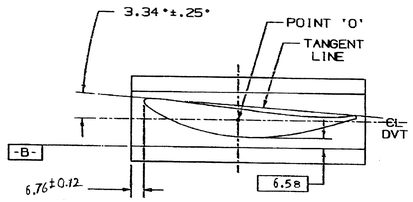

SECTION B-B (D-3)

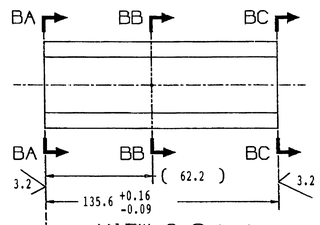

VIEW G-3 (F-3)
(AIRFOIL DELETED FOR CLARITY)

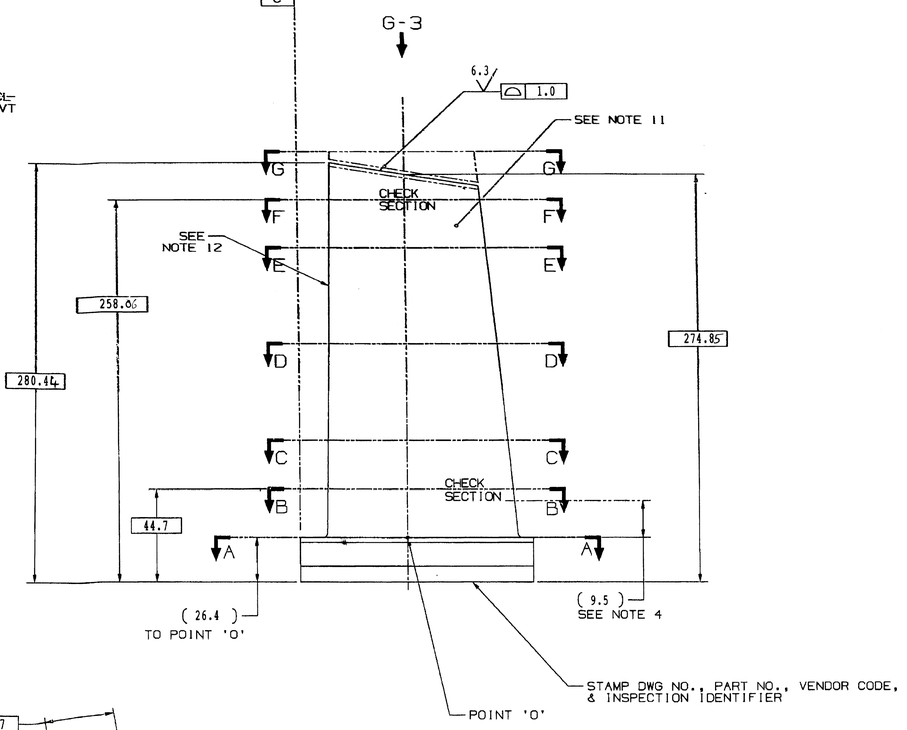

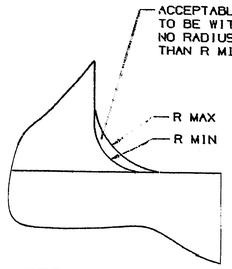

DETAIL D-8 (G-7)

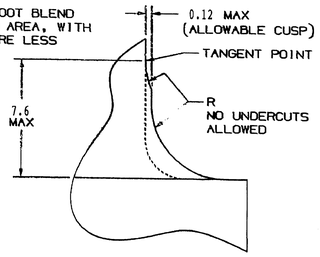

ALTERNATE METHOD OF MANUFACTURE
(REFER TO DETAIL D-8)

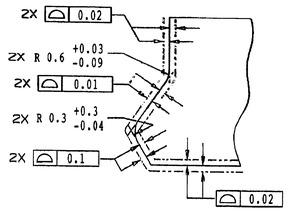

DETAIL D-5 (G-7)

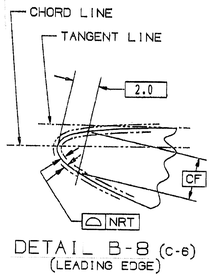

DETAIL B-8 (C-6)
(LEADING EDGE)

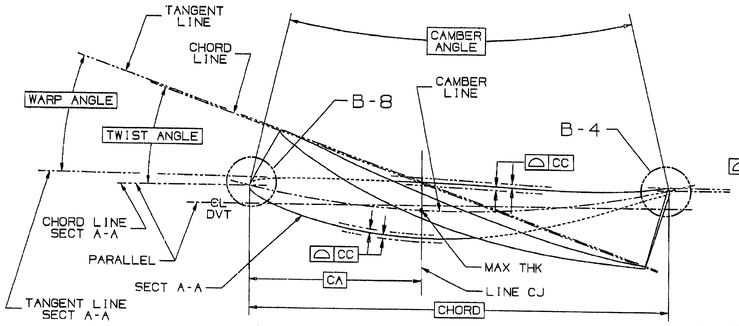

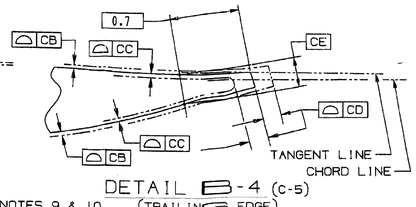

DETAIL B-4 (C-5)
(TRAILING EDGE)

SEE NOTES 9 & 10

SECTION	SECTION HEIGHT	CHORD	PERCENT THICKNESS	CAMBER ANGLE	TWIST ANGLE	WARP ANGLE	THICKNESS AT 'CA'	CA	CB	CC	CD	CE	CF	NRT
A-A	00.00	122.63	13.500	36.000	.000	.000	16.543	49.052	0.14	0.28	1.23	1 — 93	4.117	0.15
B-B	18.29	122.63	12.943	32.700	3.000	3.046	15.86	49.052	0.13	0.26	1.23	1 — 85	3.962	0.14
C-C	73.15	122.63	11.271	27.500	11.800	11.841	13.813	49.052	0.11	0.23	1.23	1 — 61	3.47	0.11
D-D	128.02	122.63	9.600	22.600	18.667	18.701	11.763	49.052	0.1	0.2	1.23	1 — 37	2.967	0.08
E-E	182.90	122.63	7.928	18.700	24.200	24.181	9.716	49.052	0.08	0.16	1.23	1 — 13	2.456	0.076
F-F	231.65	122.63	6.442	15.900	28.200	28.105	7.894	49.052	0.066	0.13	1.23	0 — 92	2.0	0.076
G-G	256.03	122.63	5.699	14.800	29.800	29.663	6.982	49.052	0.06	0.12	1.23	0 — 82	1.77	0.076

MATING PART REFERENCE DATA	
POINT 'O' Ø	1417.62
RIM ANGLE	.000
DOVETAIL ANGLE	75.067

7	COATING, ALUMINUM-INORGANIC	P18A-A93	GT10125
6	COATING, ALUMINUM-INORGANIC	P18A-A95	GT10606
5	ACPT REQT-BLADES & VANES	P29A-A9900	GT10128
4	COMPR VANES-PROCESSING	P3C-A960	GT10083
3	X-Y COORDS	287A7861	GTI06564
2	APPLICABLE DWG NOTES	314A5112	GT10459
1	APPLIED PRACTICES	348A9200	HY230261
IT.	NOMENCLATURE	IDENT	BHEL SPEC

LIST OF COMPLEMENTARY DOCUMENTS

THE INFORMATION ON THIS DOCUMENT IS THE PROPERTY OF BHARAT HEAVY ELECTRICALS LIMITED. IT MUST NOT BE USED DIRECTLY OR INDIRECTLY IN ANY WAY DETRIMENTAL TO THE INTEREST OF THE COMPANY

GENERAL DIMENSIONAL LIMITS,FITS & TOLERANCES AS PER HY0230261

SIGN. AND DATE | REF. DWG. NO. 109B5126 REV A | COMPUTER FILE NAME: 1353051004-0353091.DT

INVENTORY NO

REV.	DATE	ALTERED	CHD/APPD

TYPE OF PRODUCT OR NAME OF CUSTOMER/PROJECT

BHARAT HEAVY ELECTRICALS LIMITED
HYDERABAD

	NAME	SIGN.	DATE	NO. OF VAR.
DRN.	SCS		4.1.2000	NA
CHD.	SKR		4.1.2000	
APPD.	SSR		4.1.2000	

DEPT. CTD CODE	UNTOL. DIMS. CR.	SCALE	WEIGHT (KG)	REF. TO ASSY. DRG.	ITEM NO.	NO. OF ITEMS
423	NIL	NA	3.1	NA	NA	NA

TITLE: BLADE ROTOR STG 4

CARD CODE | DRAWING NO. 0-353-05-91004 | REV. 00

SHT. No 1 OF SHT. 1

THIRD ANGLE PROJECTION

(ALL DIMENSIONS ARE IN mm)

DRG. NO. 0-353-05-91012 SH. 1 OF 1

DRAWING		PRECISION MASTER	
PT NO	REV	DWG NO	REV
1-3	—	217X247	—

NOTES:

1. FOR APPLICABLE DRAWING NOTES SEE ITEM 2.

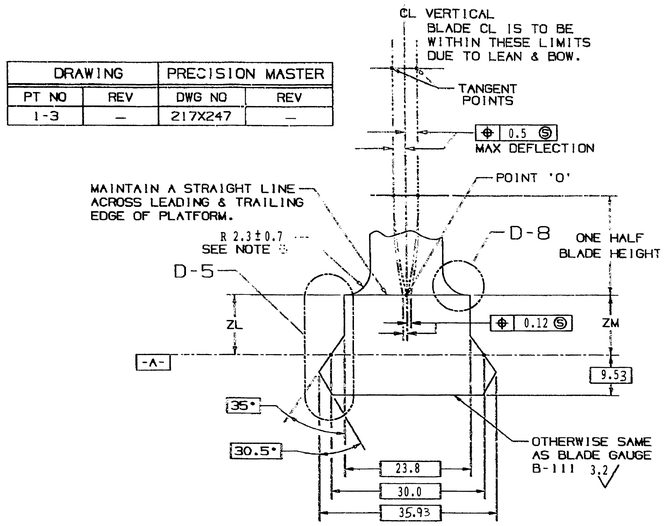

SECTIONS BA-BA, BB-BB & BC-BC (G-3)

SEE NOTE 6

SECTION	ZL $^{+0.0}_{-0.4}$	ZM $^{+0.0}_{-0.4}$
BA-BA	7.37	11.07
BB-BB	12.98	12.98
BC-BC	11.63	8.38

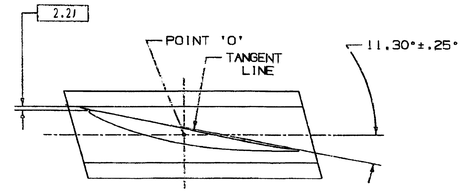

SECTION G-G (E-3)

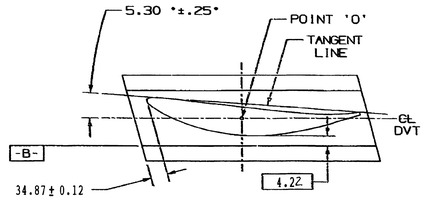

SECTION B-B (D-3)

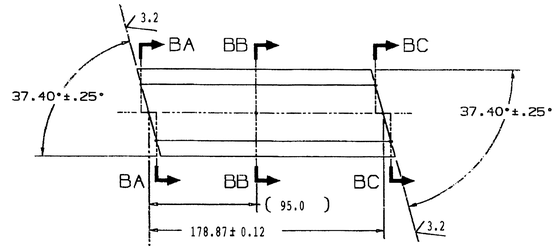

VIEW G-3 (F-3)
(AIRFOIL DELETED FOR CLARITY)

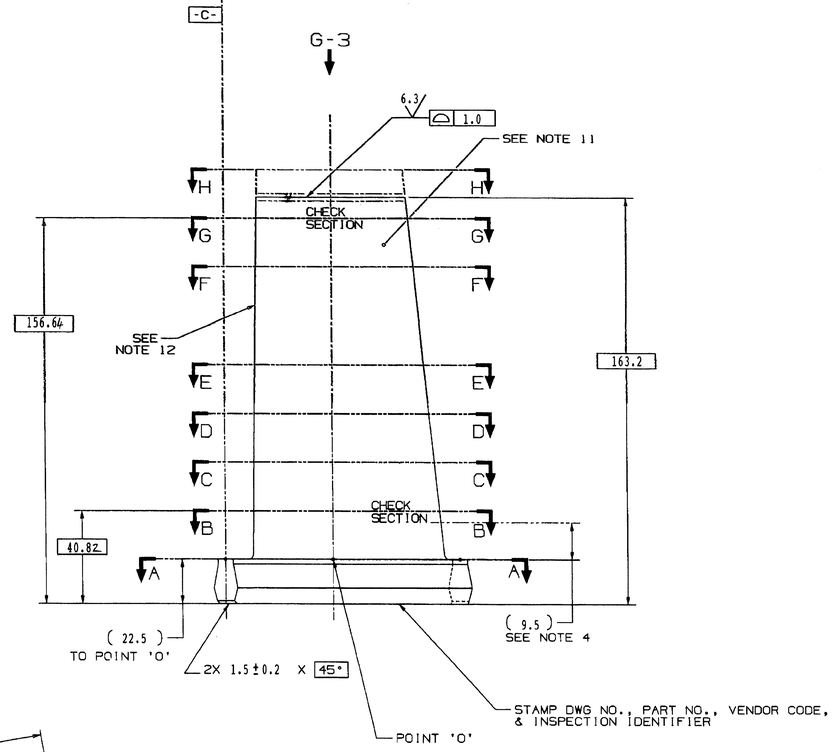

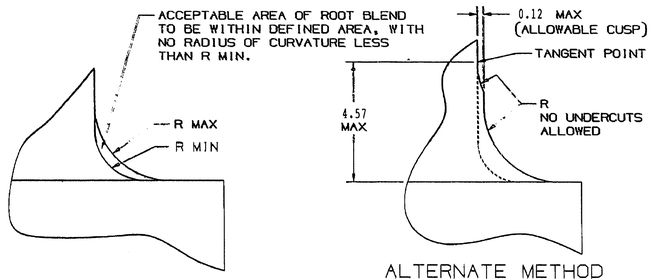

DETAIL D-8 (G-7)

ALTERNATE METHOD OF MANUFACTURE
(REFER TO DETAIL D-8)

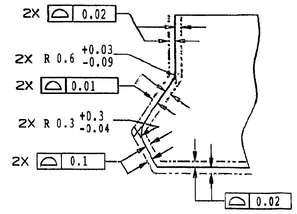

DETAIL D-5 (G-7)

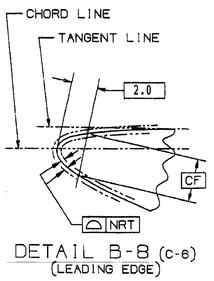

DETAIL B-8 (C-6)
(LEADING EDGE)

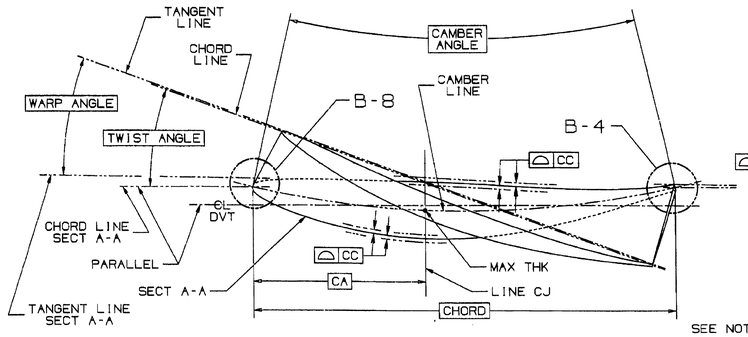

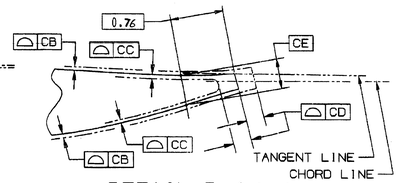

DETAIL B-4 (C-5)
(TRAILING EDGE)

SEE NOTES 9 & 10

SECTION	SECTION HEIGHT	CHORD	PERCENT THICKNESS	CAMBER ANGLE	TWIST ANGLE	WARP ANGLE	THICKNESS AT 'CA'	CA	CB	CC	CD	CE	CF	NRT
A-A	00.00	92.53	16.300	18.800	.000	.000	15.07	37.01	0.12	0.25	0.92	1.78	4.3	0.17
B-B	18.29	92.53	14.833	17.400	2.300	1.921	13.72	37.01	0.114	0.23	0.92	1.62	3.92	0.14
C-C	27.43	92.53	14.100	16.700	3.300	2.733	13.04	37.01	0.11	0.22	0.92	1.54	3.73	0.13
D-D	54.86	92.53	11.900	14.800	5.700	4.516	11.00	37.01	0.09	0.18	0.92	1.3	3.15	0.09
E-E	82.3	92.53	9.700	13.200	7.600	5.737	8.97	37.01	0.07	0.15	0.92	1.06	2.57	0.076
F-F	109.73	92.53	8.425	11.900	9.200	7.039	7.79	37.01	0.066	0.13	0.92	0.92	2.23	0.076
G-G	134.11	92.53	7.300	11.000	10.400	7.920	6.75	37.01	0.056	0.11	0.92	0.8	1.93	0.076
H-H	146.3	92.53	6.734	10.600	10.800	8.156	6.23	37.01	0.05	0.1	0.92	0.74	1.78	0.076

MATING PART REFERENCE DATA	
POINT 'O' Ø	1612.3
RIM ANGLE	.000
DOVETAIL ANGLE	37.400

IT.	NOMENCLATURE	IDENT	BHEL SPEC
7	COATING, ALUMINUM-INORGANIC	P18A-A93	GT10125
6	COATING, ALUMINUM-INORGANIC	P18A-A95	GT10606
5	ACPT REOT-BLADES & VANES	P29A-A9900	GT10128
4	COMPR VANES-PROCESSING	P3C-A980	GT10083
3	X-Y COORDS	287A7867	GT10661
2	APPLICABLE DWG NOTES	314A5112	GT10459
1	APPLIED PRACTICES	348A9200	HY230261

LIST OF COMPLEMENTARY DOCUMENTS

TYPE OF PRODUCT OR NAME OF CUSTOMER/PROJECT: FRAME - 9

BHARAT HEAVY ELECTRICALS LIMITED HYDERABAD

	NAME	SIGN.	DATE	NO.OF VAR.
DRN.	SCS		4.1.2000	
CHK.	SKR		4.1.2000	NA
APPD.	SSR		4.1.2000	

DEPT. STD CODE	UNITS. DIMS. GR.	SCALE	WEIGHT (KG)	REF. TO ASSY. DRG.	ITEM NO.	NO.OF ITEMS
423		NA	1.6	NA	NA	NA

TITLE: BLADE ROTOR STG 17

CARD CODE | DRAWING NO. 0-353-05-91012 | REV. 00 | SHT. No 1 | NO OF SHT. 1

REV.	DATE	ALTERED CHD/APPD	ZONE

THE INFORMATION ON THIS DOCUMENT IS THE PROPERTY OF BHARAT HEAVY ELECTRICALS LIMITED, IT MUST NOT BE USED DIRECTLY OR INDIRECTLY IN ANY WAY DETRIMENTAL TO THE INTEREST OF THE COMPANY

GENERAL DIMENSIONAL LIMITS, FITS & TOLERANCES AS PER HY0230261

SCH. AND DATE | REF. DRG. NO. 1093134 REF'-1 | COMPUTER FILE NAME 1093093112-09-05.TIF | INVENTORY NO

THIRD ANGLE PROJECTION

(ALL DIMENSIONS ARE IN mm)

DRG. NO. 1-351-29-61001 SH. 1 OF 1

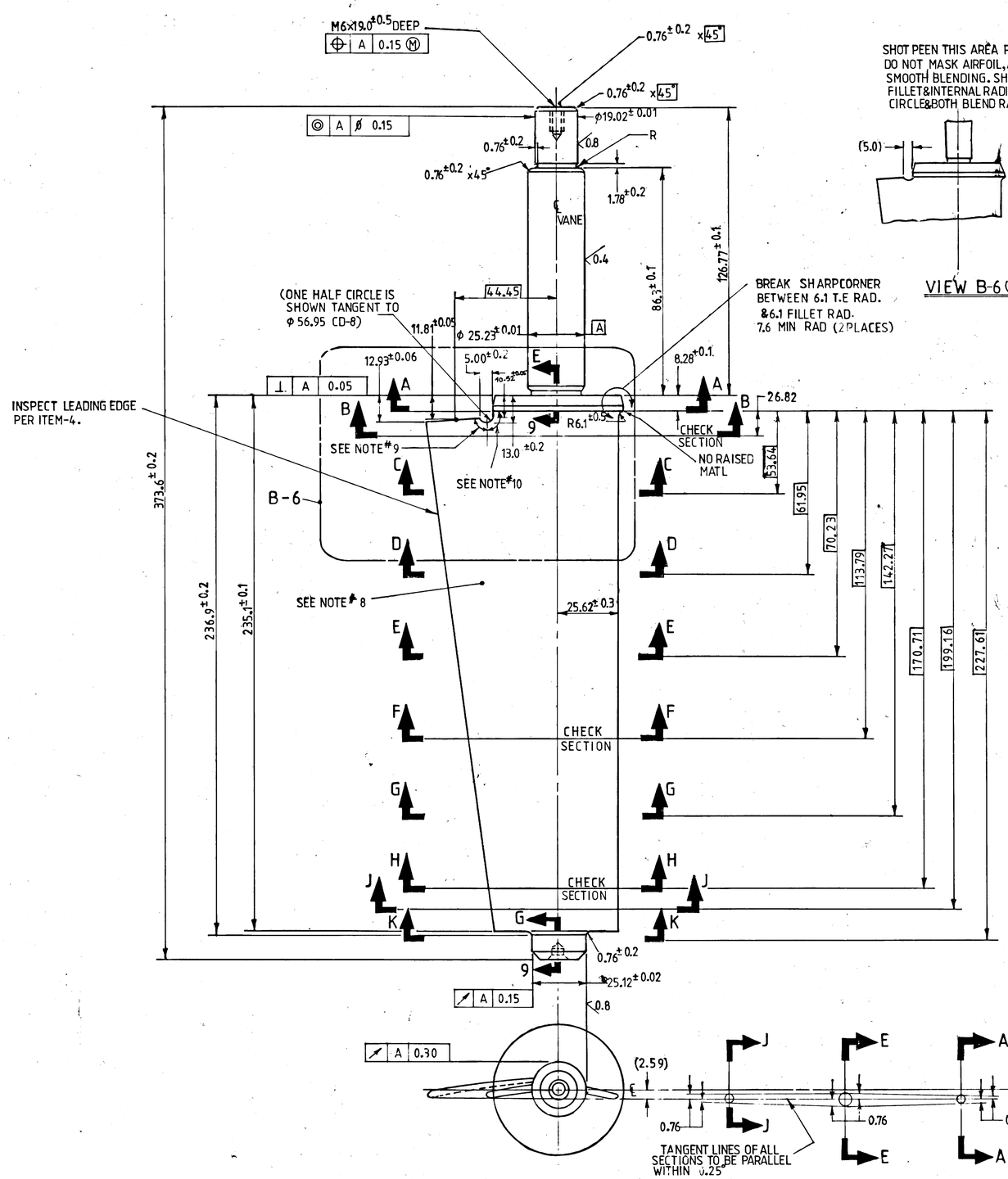

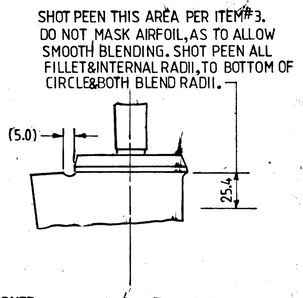

VIEW B-6 (C-2)

TABLE 1			TOL. IN MM		
SECT	CHORD	"B"	"C"	"D"	"E"
A-A	84.51	29.578	0.84	0.25	0.13
B-B	81.05	28.369	0.81	0.25	0.13
C-C	77.57	27.15	0.79	0.25	0.13
D-D	76.50	26.777	0.76	0.23	0.13
E-E	75.44	26.403	0.76	0.23	0.13
F-F	69.80	24.43	0.71	0.20	0.10
G-G	66.12	23.14	0.66	0.20	0.10
H-H	62.46	21.862	0.63	0.18	0.10
J-J	58.78	20.571	0.58	0.18	0.10
K-K	55.10	19.281	0.56	0.18	0.10

NOTES:

1. PROCESS PER ITEM# 3,4.
2. FOR DETAILS OF VANE AIRFOIL, SEE ITEM#2.
3. PRECISION MASTER DRG. 217X320 DEFINES THE AIRFOIL CONTOUR. AN APPROVED REPRODUCTION ON STABLE MATERIAL SHALL BE USED IN THE PRODUCTION AND INSPECTION OF THIS PIECE.
4. CHECK BLADE SECTION CONTOURS AT THOSE HEIGHTS LABELED CHECK SECTION.
5. WHEN CHECKING BLADE PROFILE, IMAGE MUST BE REGISTERED WITH TRAILING EDGE CENTER ZEROED OUT AND THE LEADING EDGE CENTERED. AN ACCEPTABLE PROFILE MUST FALL WITHIN THE TOLERANCE LIMITS IN A UNIFORM MANNER.
6. TOLERANCE VARIES AS FOLLOWS:
   A. BETWEEN TRAILING EDGE AND LINE "A" THE MINIMUM TOLERANCE TO REMAIN CONSTANT.
   B. BETWEEN TRAILING EDGE AND LINE "A" THE MAXIMUM TOLERANCE TO INCREASE IN PROPORTION TO DISTANCE ALONG PROFILE LINE.
7. FOR AIRFOIL X,Y COORDINATES SEE ITEM# 2.
8. INK STAMP VANE WITH DRG.NO., VAR NO, REV, MP STAMP, HEAT LOT CODE, VENDOR IDENT. USING APPROVED INK.
9. BLEND IS ACCEPTABLE, NOT REQD.
10. BLEND CORNERS FROM PLATFORM TO CIRCLE FILLET RUNOUT AT END OF BOTH SIDES OF AIRFOIL TO A 1.27 RADIUS MIN. THESE FINISHES TO BE 1.6.
11. THIS VANE IS DESIGNED FOR AN 82° RUNNING ANGLE.

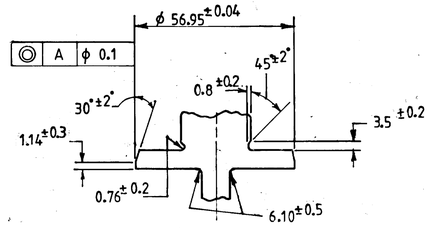

SECTION E-9 (C-4)

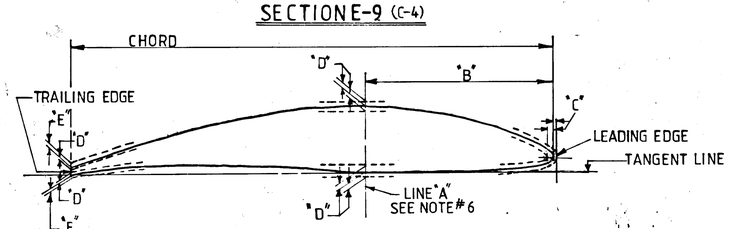

FOR TOLERANCE VALUES SEE TABLE AT ZONE B-8

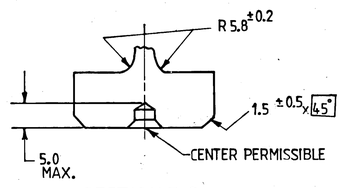

SECTION G-9 (G-4)

C450	01
MATL	VAR NO.

ITEM	DESCRIPTION	BHEL REF NO.	GE REF NO.
5			
4	PROCESS	GT10128	P29A-AG 900
3	PROCESS	GT10083	P3C-AG-60
2	X&Y COORDIN	GT10437	315 A9644 (REF REL. 217X320)
1	APPLIED PRACTICES	HY0230261	118D5700

LIST OF COMPLEMENTARY DOCUMENTS

TYPE OF PRODUCT OR NAME OF CUSTOMER/PROJECT

BHARAT HEAVY ELECTRICALS LTD. HYDERABAD

	NAME	SIGN.	DATE
DRN.	C.PRAVEEN	C.Praveen	28.4.95
CHD.	K.MADAN	K.Madan	28.04.95
APPD.	K.R.M.RAO	Rao	28.4.95

NO. OF VAR. | NO. OF ITEMS

DEPT. GTD | DEPT. CODE 423 | UNTOL. DIMS. GR. FINE | SCALE NTS | WEIGHT (KG) 3,0 | REF. TO ASSY. DRG. | ITEM NO.

TITLE: VANE - INLET GUIDE, VARIABLE

CARD CODE N.A.

DRAWING NO. 1-351-29-61001 REV. 00

SHT. No 1 NO. OF SHT. 1

ALTERED CHD/APPD	REV.	DATE	ALTERED CHD/APPD	REV.	DATE	ALTERED CHD/APPD	REV.	DATE	ALTERED CHD/APPD	REV.	DATE	ALTERED CHD/APPD	REV.	DATE	ALTERED CHD/APPD	REV.	DATE	ALTERED CHD/APPD	REV.	DATE	ALTERED CHD/APPD
	ZONE			ZONE			ZONE			ZONE			ZONE			ZONE			ZONE		

THE INFORMATION ON THIS DOCUMENT IS THE PROPERTY OF BHARAT HEAVY ELECTRICALS LIMITED. IT MUST NOT BE USED DIRECTLY OR INDIRECTLY IN ANY WAY DETRIMENTAL TO THE INTEREST OF THE COMPANY

GENERAL DIMENSIONAL LIMITS, FITS & TOLERANCES AS PER HY0230261

INVENTORY NO | SIGN. AND DATE | REF. DRG. NO. 151D8781, REV:E | COMPUTER FILE NAME