FIRST ANGLE PRJECTION

ALL DIMENSIONS ARE IN MM

DRAWING NO. PE-DG-329-616-C011

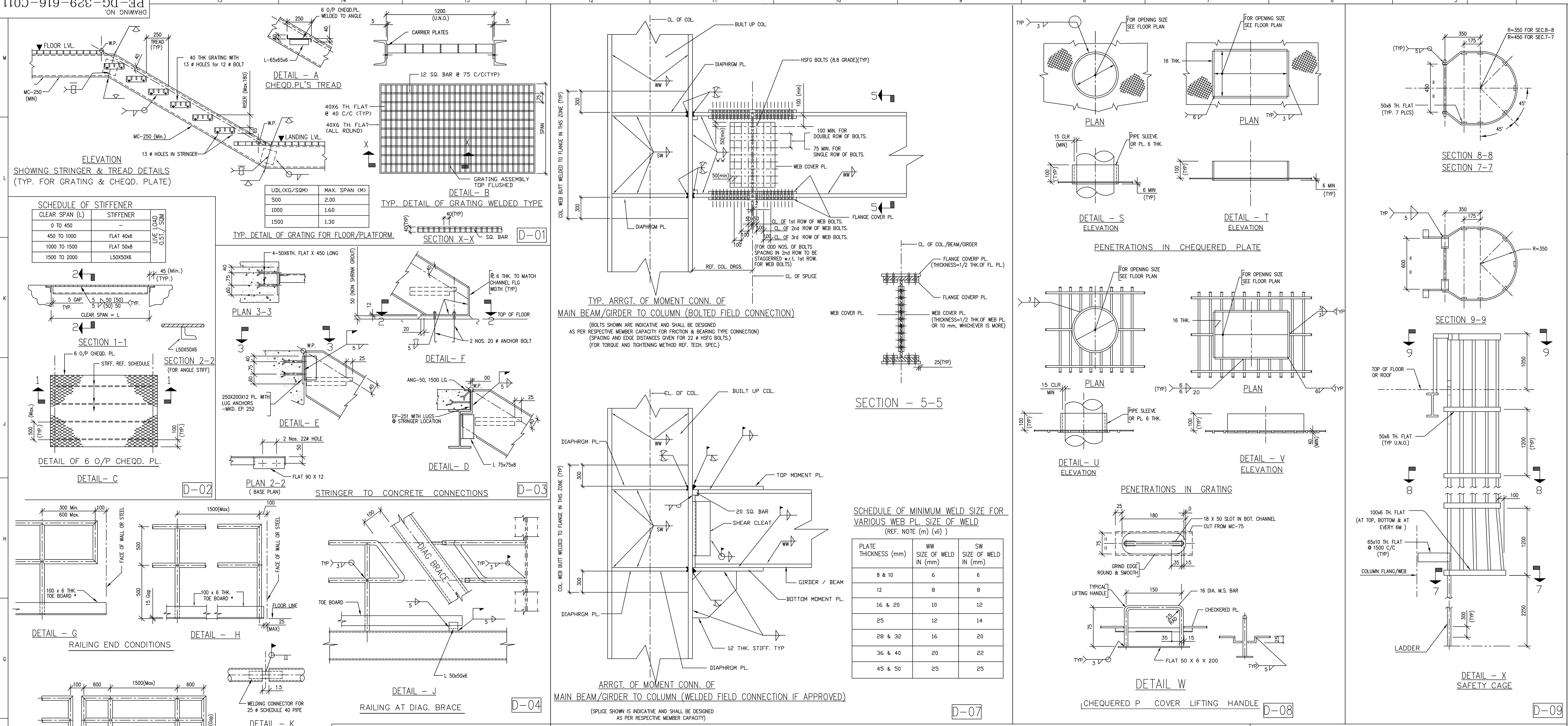

SCHEDULE OF STIFFENER

CLEAR SPAN (L)	STIFFENER	
0 TO 450	–	LIVE LOAD 0.5T./ SQM
450 TO 1000	FLAT 40x6	
1000 TO 1500	FLAT 50x8	
1500 TO 2000	L50X50X6	

UDL(KG/SQM)	MAX. SPAN (M)
500	2.00
1000	1.60
1500	1.30

SCHEDULE OF MINIMUM WELD SIZE FOR VARIOUS WEB PL. SIZE OF WELD
(REF. NOTE (m) (vii))

PLATE THICKNESS (mm)	WW SIZE OF WELD IN (mm)	SW SIZE OF WELD IN (mm)
8 & 10	6	6
12	8	8
16 & 20	10	12
25	12	14
28 & 32	16	20
36 & 40	20	22
45 & 50	25	25

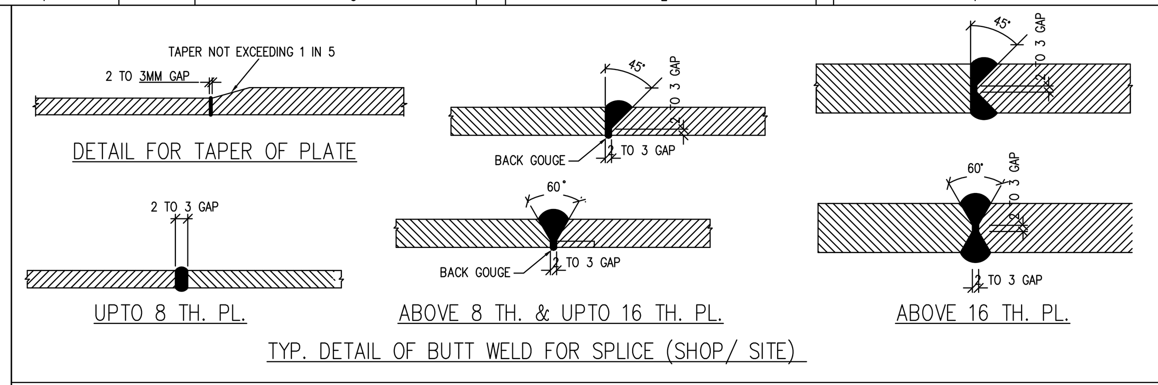

GENERAL NOTES FOR STRUCTURAL STEEL AND MISCELLANEOUS STEEL WORKS

A. GENERAL

a.) ALL DIMENSIONS ARE IN MILLIMETRES EXCEPT FLOOR ELEVATIONS AND PLANT GRID WHICH ARE IN METRE UNLESS STATED OTHERWISE.

b.) ALL ELEVATIONS ARE WITH RESPECT TO MAIN POWER HOUSE BUILDING GROUND FLOOR LEVEL AS EL.(±)0.00 M. WHICH CORRESPONDS TO RL.***** ABOVE M.S.L.

c.) ALL DRAWINGS SHALL BE READ IN CONJUNCTION WITH THE TERMS, CONDITIONS AND SPECIFICATIONS OF THE CONTRACT.

d.) THE FABRICATION & ERECTION OF STRUCTURAL STEEL SHALL BE IN ACCORDANCE WITH IS:800 – CODE OF PRACTICE FOR GENERAL CONSTRUCTION IN STEEL AND AS SPECIFIED IN THE CONTRACT TECHNICAL SPECIFICATIONS.

B. MATERIAL

a.) ALL MATERIALS SHALL BE NEW, CLEAN, RUST FREE AND STRAIGHTENED IF NECESSARY BEFORE BEING WORKED.

b.) ALL WELDING ELECTRODES SHALL BE OF LOW HYDROGEN TYPE CONFORMING TO IS:814 AND SHALL BE EB5426H3JX TYPE. ALL ELECTRODES, FLUX, WIRE ETC. SHALL BE OF ADOR WELDING LTD., ESAB INDIA LTD., D&H SECHERON ELECTRODES PVT. LTD.

c.) ALL MILD STEEL BOLTS SHALL BE OF PROPERTY CLASS 4.6 GRADE–C CONFORMING TO IS:1367.

d.) ALL HIGH STRENGTH STRUCTURAL BOLTS SHALL BE OF PROPERTY CLASS 8.8 GRADE–A CONFORMING TO IS:1367 & SHALL BE SUPPLIED CONFORMING TO IS:3757

e.) ALL NUTS SHALL BE OF HEAVY DUTY HEXAGONAL TYPE AND SHALL BE COMPATIBLE WITH THE BOLTS. MS NUTS SHALL BE OF CARBON STEEL PRODUCT GRADE–C OF IS:1363 AND OF PROPERTY CLASS 5 OF IS:1367

f.) ALL NUTS & WASHERS FOR HIGH STRENGTH BOLTS (H.S.F.G.) SHALL CONFORM TO IS:6623 & IS:6649 RESPECTIVELY.

g.) WASHERS FOR MILD STEEL BOLTS SHALL BE OF MILD STEEL CONFORMING TO IS:5369 / IS:5372 OR IS:5374 OR IS:2016 AS THE CASE MAY BE.

h.) ALL ANCHOR BOLTS SHALL BE MILD STEEL OF GRADE 4.6 CONFORMING TO IS:5624

I.) ALL STRUCTURAL AND MISCELLANEOUS STEEL WORK SHALL BE OF MILD STEEL CONFORMING TO FOLLOWING INDIAN STANDARDS:–

i) STRUCTURAL SHAPES	IS:2062 (GRADE A)
ii) PLATE UPTO 20 MM. THICKNESS	IS:2062 (GRADE A)
iii) PLATE ABOVE 20 MM. THICKNESS (KILLED & NORMALISED)	IS:2062 (GRADE B)
iv) PLATE FOR CRANE GIRDER	IS:2062 (GRADE C)
v) STRUCTURAL PIPES	IS:806 (YST 25)
vi) STRUCTURAL HOLLOW SECTIONS (SQUARE & RECTANGULAR)	IS:4923
vii) M.S PIPES HANDRAIL	IS:1239(MEDIUM CLASS)
viii) CHEQUERED PLATE (6 MM. THK.)	IS:3502
ix) 3.15MM STAINLESS STEEL BUNKER LINNER	AISI 304

C CONNECTIONS

a.) UNLESS STATED OTHERWISE, ALL SHOP CONNECTIONS SHALL BE BY WELDING AND FIELD CONNECTION GENERALLY SHALL BE BOLTED USING HIGH STRENGTH FRICTION GRIP (HSFG) BOLTS OF 8.8 GRADE EXCEPT FOR SECONDARY TO MAIN BEAMS SHALL WITH WELDING.

b.) ALL CONNECTIONS SHALL BE DEVELOPED IN LINE WITH GOOD ENGINEERING PRACTICE AND SHALL BE SUBJECT TO THE APPROVAL OF THE ENGINEER.

c.) THE SIZE OF FILLET WELD SHALL BE 6 MM. MINIMUM UNLESS NOTED OTHERWISE.

d.) THE FIELD CONNECTION OF PURLINS SHALL BE WITH WELDED & FOR SAG ANGLE & WALL BEAMS SHALL BE DONE WITH M.S BOLTS

e.) THE DIAMETER OF BOLT SHALL BE 20MM (MINIMUM) FOR HIGH STRENGTH FRICTION GRIP AND 16 MM. (MINIMUM) FOR MS BOLTS.

f.) ALL BOLT CONNECTIONS SHALL HAVE MINIMUM TWO BOLTS.

g.) LENGTH OF FILLET WELDS SHALL NOT BE LESS THAN FOUR TIMES OF THE NOMINAL SIZE OF THE WELD OR 40 MM. WHICHEVER IS MORE.

h.) FILLET WELD TERMINATING AT ENDS MUST HAVE RETURN AROUND CORNERS NOT LESS THAN TWICE THE NOMINAL SIZE OF THE WELD.

I.) BUTT WELDS SHALL BE FULL PENETRATION BUTT WELD.

j.) THE DIAMETER OF BOLT HOLES SHALL NOT BE MORE THAN 2 MM. OF THE DIAMETER OF BOLT UNLESS STATED OTHERWISE.

k.) THE ERECTION CLEARENCE FOR END OF MEMBERS SHALL NOT BE MORE THAN 5 MM. AT EACH END UNLESS STATED OTHERWISE.

L.) GUSSET/END PLATES SHALL BE OF FOLLOWING MINIMUM THICKNESS UNLESS SPECIFIED OTHERWISE :–
i) FOR BEAMS OF DEPTH LESS THAN 450 :– 8 MM.
ii) FOR BEAMS OF DEPTH 450 TO 600 :– 10 MM.
iii) TRUSS/BRACINGS, WITH MEMBER THICKNESS 8 MM. & LESS :– 8MM.
iv) TRUSS/BRACINGS, WITH MEMBER THICKNESS 10MM & MORE :–12MM.

m.) UNLESS OTHERWISE STATED IN THE DESIGN DRAWINGS, THE CONNECTION SHALL BE DESIGNED FOR THE FOLLOWING LOADS:–

i) MOMENT CONNECTIONS DESIGNATED AS 'MC' TO BE DESIGNED FOR THE FULL CAPACITY OF THE MEMBER.

ii) SHEAR CONNECTIONS WILL BE DESIGNED FOR 75% OF SECTION STRENGTH FOR ROLLED SECTIONS AND 80% OF SECTION STRENGTH FOR BUILT UP SECTION OR ROLLED SECTION WITH COVER PLATES. IN ANY CASE, THE DESIGNED VALUE SHALL NOT BE LESS THAN THE ACTUAL SHEAR.

iii) CONNECTIONS FOR BEAMS IN MAIN AXIS/GRID TO BE DESIGNED FOR THE MINIMUM AXIAL LOAD OF 7.5 MT.(TENSION/COMPRESSION) UNLESS HIGHER LOAD IS SPECIFIED IN ADDITION TO REQUIRED SHEAR/ MOMENT LOAD. IN ANY CASE, THE DESIGNED AXIAL LOAD SHALL NOT BE LESS THAN THAN THE ACTUAL TENSION/ COMPRESSION.

iv) COLUMN SPLICE TO BE DESIGNED FOR FULL CAPACITY PLUS 5% ADDITION CAPACITY OF LOWER SECTIONS.

v) CONNECTION FOR ALL TRUSS MEMBERS TO BE DESIGNED FOR FULL TENSILE STRENGTH OF THE MEMBER.

vi) CONNECTION FOR BRACING MEMBERS TO BE DESIGNED FOR FULL TENSILE STRENGTH OF THE MEMBER.

vii) SIZE OF FILLET WELD FOR FLANGE TO WEB CONNECTION FOR BUILT UP SECTION SHALL BE AS FOLLOWS :
a) FULL SHEAR CAPACITY OR ACTUAL SHEAR WHICHEVER IS MORE FOR BOX SECTION.
b) 80% OF FULL SHEAR CAPACITY OR ACTUAL SHEAR OR 0.5 OF WEB THICKNESS, WHICHEVER IS MORE. FOR BUILT–UP SECTION, WELD SHALL BE DOUBLE FILLET.

viii) THE CONNECTION BETWEEN TOP FLANGE AND WEB OF CRANE GIRDER SHALL BE FULL PENETRATION BUTT WELD AND FOR BOTTOM FLANGE CONNECTION, FILLET WELD MAY BE PROVIDED.

ix) CONNECTION OF BASE PLATE AND GUSSET MEMBERS WITH COLUMNS SHALL BE DONE CONSIDERING THAT TOTAL LOAD GETS TRANSFERED THROUGH WELD

n.) IN ALL CASES, THE UNTHREADED PORTION OF THE BOLT SHALL BEAR ON THE MEMBERS CONNECTED. A WASHER OF ADEQUATE THICKNESS MAY BE PROVIDED TO EXCLUDE THE THREADS FROM THE BEARING THICKNESS IF A LARGER GRIP BOLT HAS TO BE USED FOR THIS PURPOSE. ALL ERECTION BOLT HOLES SHALL BE SUITABLY PLUGGED.

o.) FOR ERECTION AND TEMPORARY ASSEMBLY M.S BLACK BOLTS TO BE USED, WHICH SHALL BE REMOVED AFTER FINAL WELDING. OPENING OF HOLES THUS LEFT SHALL BE PLUG WELDED.

p.) FOR COLUMNS FOUNDATION BOLTS, AT LEAST DOUBLE NUTS SHALL BE PROVIDED.

q.) OVER HEAD WELDING SHALL NOT BE RESORTED TO UNLESS SPECIFICALLY PROVIDED IN DRAWING..

r.) PROPER PRE–HEATING TEMPERATURE SHALL BE MAINTAINED AS PER SPEC.

s.) THE WELDING SEQUENCE/ PROCESS SHALL BE SO ADOPTED THAT NO ACCUMULATION OF SECONDARY WELDING STRESSES TAKES PLACE IN THE MEMBERS.

t.) DESIGN CALCULATIONS FOR MAJOR CONNECTIONS SHALL BE FURNISHED BY BHEL FOR APPROVAL DURING PREPARATION OF FABRICATION/ DETAIL DRGS.

D PAINTING

FOR INDOOR & OUTDOOR STEEL STRUCTURES
(ALL STRUCTURAL STEEL AND M.S HANDRAILS SHALL BE PAINTED AS FOLLOWS)

7.1 ONE OR MORE SHOP COAT OF EPOXY RESIN BASED ZINC PHOSPHATE PRIMER (IS:2074) DURING FABRICATION (DFT NOT LESS THAN 25 MICRONS)

7.2 ONE ADDITIONAL COAT OF EPOXY RESIN BASED ZINC PHOSPHATE PRIMER AND FINISHING COATS OF EPOXY RESIN BASED PAINT PIGMENTED WITH TITANIUM DIOXIDE APPROVED SHADE AND QUALITY SHALL BE PROVIDED AFTER COMPLETION OF ERECTION. AS PER SPEC. (DFT NOT LESS THAN 25 MICRONS)

7.3 THE FINISHING PAINT SHALL BE WITH MINIMUM TWO OR MORE COATS OF EPOXY RESIN BASED PAINT PIGMENTED WITH TITANIUM DIOXIDE AND THE TOTAL DRY FILM THICKNESS (DFT) OF THE FINISHED PAINT SHOULD NOT BE LESS THAN 100 MICRON.(EXCLUDING PRIMER)

7.4 FOR INDOOR STRUCTURES SURFACE PREPARATION SHALL BE DONE EITHER MANUALLY OR BY ANY OTHER APPROVED METHOD.(EXCEPT SAND BLASTING SHOT BLASTING/FLAME CLEANING)

7.5 FOR OUTDOOR STRUCTURES SURFACE PREPARATION SHALL BE DONE WITH MECHANICAL POWER TOOLS AS PER IS:1477(PART–1) SUCH THAT THE RUST, DIRT & SCALES ETC., ARE COMPLETELY REMOVED.

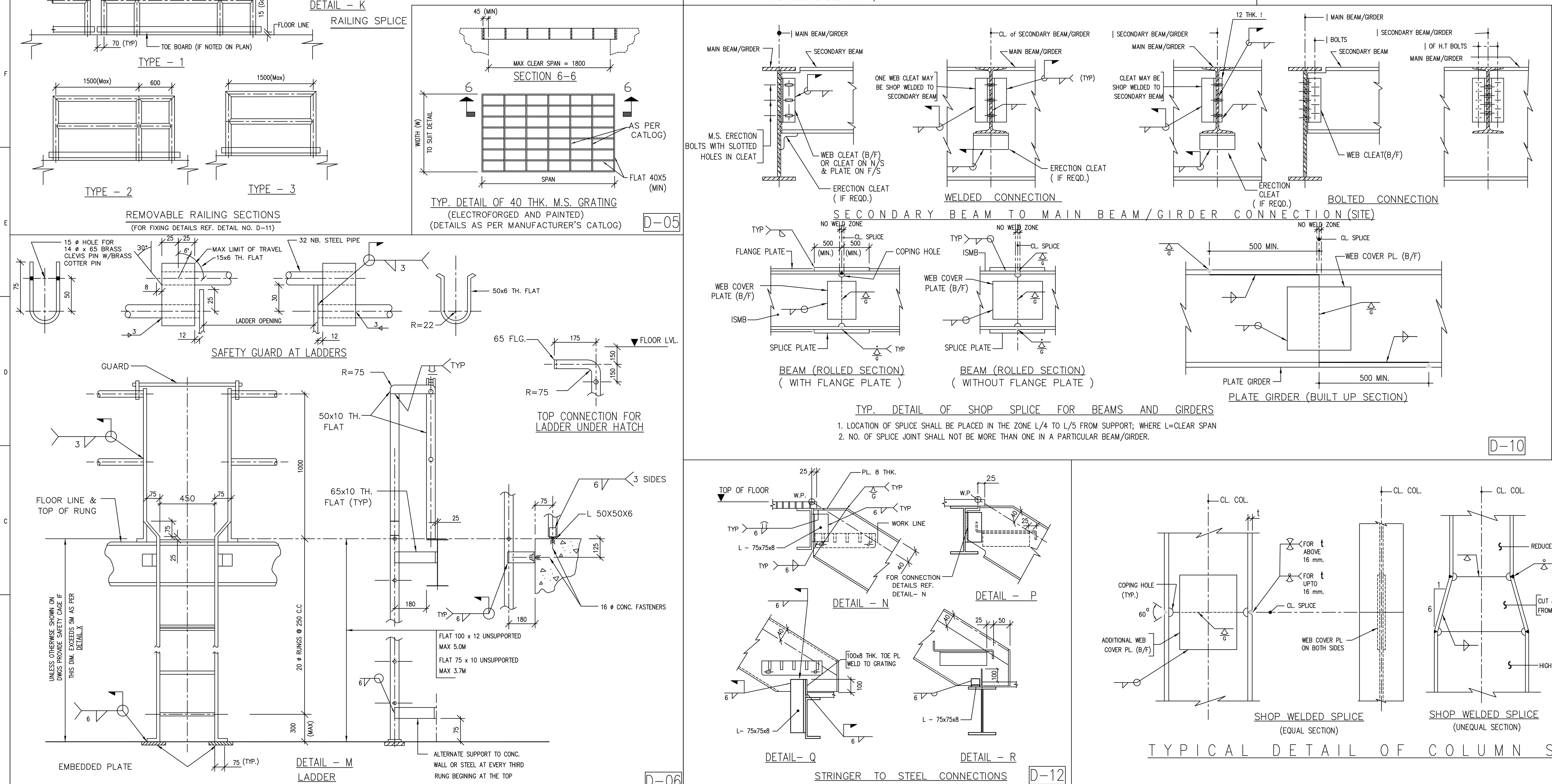

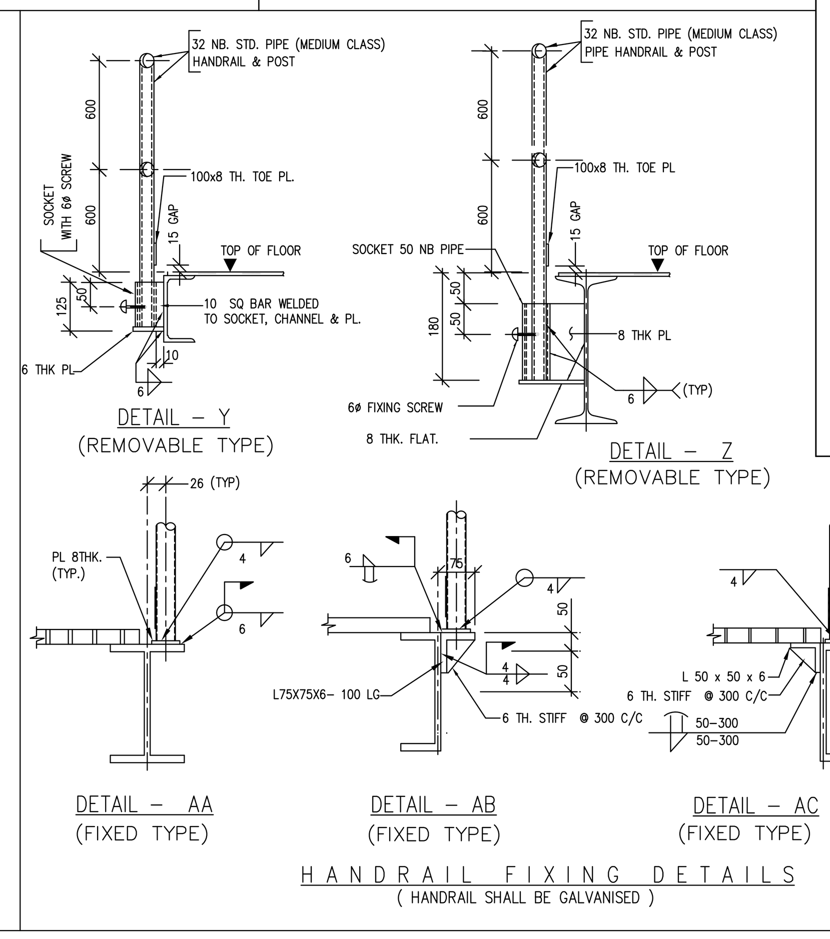

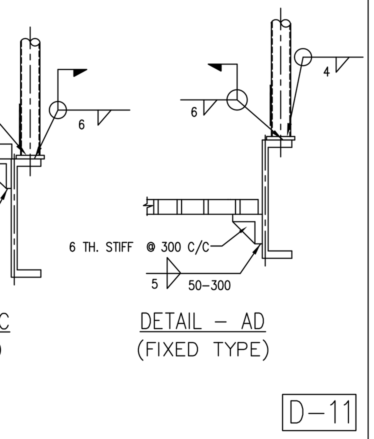

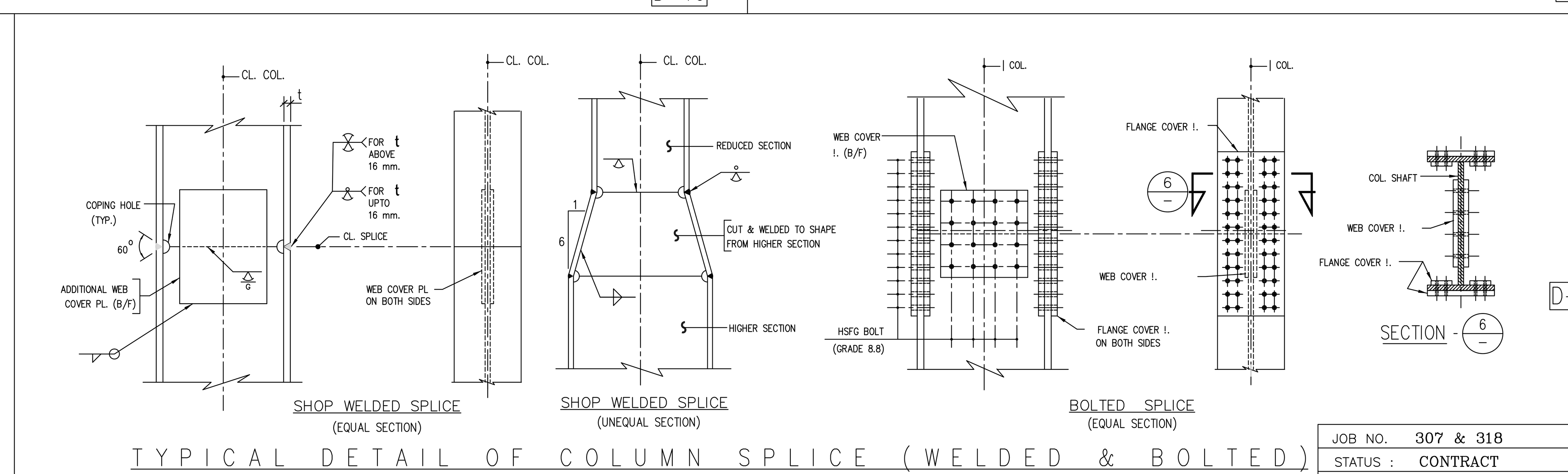

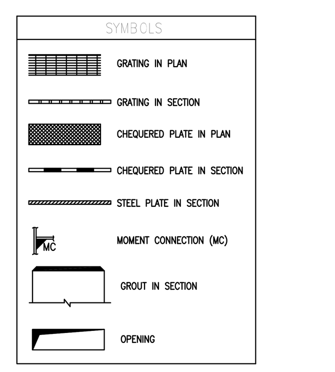

FOR PLANNING PURPOSE ONLY

COPY RIGHT AND CONFIDENTIAL
The information on this document is the property of BHARAT HEAVY ELECTRICALS LIMITED it must not be used directly or indirectly in any way deterimental to the interest of the company.

CAD FILE NAME: C:\3061027 data\KyaKar\FDrv\manibh\NEW PROJECTS\4x600MW OPJSTPP\Drg\General Str Steel Drg 616\R0\PE-DG-329-616-C011 R0 STD DET STEEL DRG.dwg

DATE	ALTD	CHD	APPD	REV.	DATE	ALTD	CHD	APPD	REV.	DATE	ALTD	CHD	APPD	REV.	DATE	ALTD	CHD	APPD	REV.	DATE	ALTD	CHD	APPD	REV.	DATE	ALTD	CHD	APPD	REV.	DATE	ALTD	CHD	APPD	REV.	DATE	ALTD	CHD	APPD	REV.	DATE	ALTD	CHD	APPD

JOB NO. 307 & 318

STATUS : CONTRACT

CUSTOMER'S CONSULTANT : DEVELOPMENT CONSULTANT PVT LTD.,CHENNAI

CUSTOMER : JINDAL

O.P. JINDAL SUPER THERMAL POWER PLANT
4 X 600 MW UNITS PHASE–III
JINDAL POWER LIMITED RAIGARH

BHARAT HEAVY ELECTRICALS LTD
POWER SECTOR
PROJECT ENGINEERING MANAGEMENT
NEW DELHI

DEPT CODE		NAME	SIGN	DATE
C	DRN	DSR	Sd/–	22.07.2009
	DESN	MGA	Sd/–	20.07.2009
	CHD	MP	Sd/–	23.07.2009
	APPD	RK	Sd/–	24.07.2009

TITLE :– MILL AND BUNKER BUILDING
GENERAL NOTES & STANDARD DETAILS FOR STRUCTURAL STEEL WORKS

CIVIL	MPL	ELEC	C&I	MSE	MAX	DEPT.	SCALE 1:100	DRAWING NO.
						SIGN		PE–DG–329–616–C011
						DATE		SHEET 1 OF 1 REV. 0

FORMAT SIZE A0