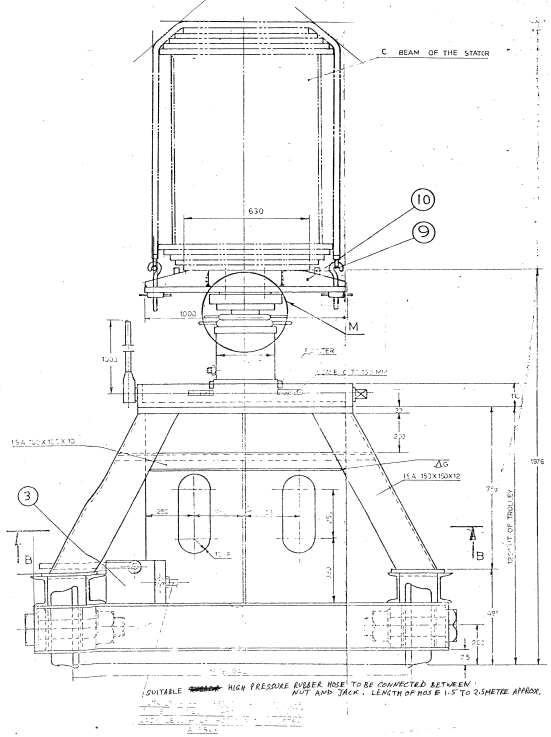

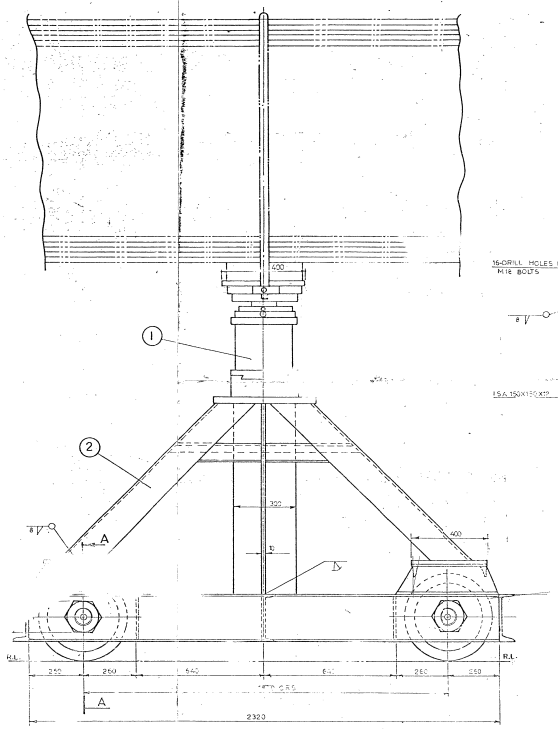

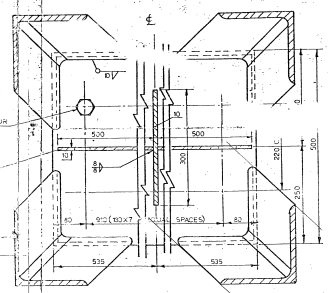

SECTION BB
WITHOUT ISA 100X100X10

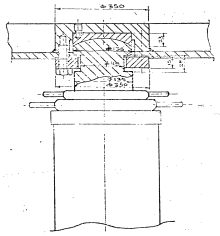

DETAIL FOR EXPLODED VIEW M

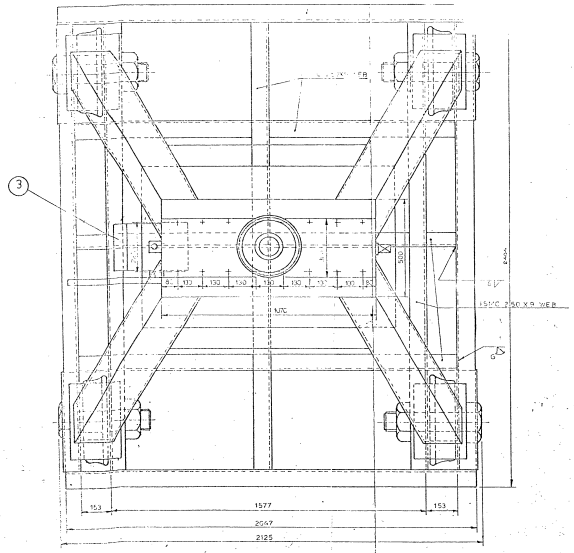

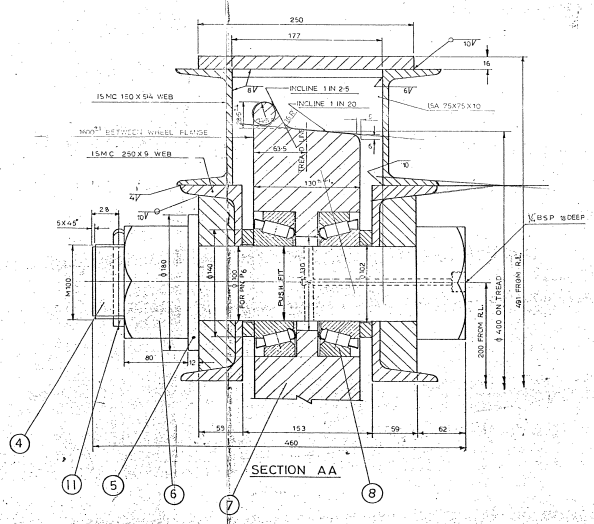

SECTION AA

SPECIFICATIONS

CAPACITY	100 TONNES
STROKE	350 MM
W. PRESSURE	565 BAR
CLOSED HEIGHT	1976 MM
TRAVERSE (OF HYD JACK)	200 MM

DEGREE OF INCLINATION 5° MAX.

SN	DESCRIPTION	QTY	MATL	Weight in kg	REMARKS
11	SPLIT PIN 10 Φ X160 LONG	4	IS 549	0.4	
10	TOP SUPPORTING PLATE	1	M.S		J/1073 B
9	STOPPER	2			J/1073 B
8	BEARING TAPER ROLLER	8			SKF 32220 EJ
7	WHEEL	4	IS 1875 CL 5	116.5	325 BHN
6	NUT FOR M130 PIN	4	IS 1875 CL 5	—	—
5	PLAIN WASHER FOR Φ 100 PIN	4	IS 2016	1.7	—
4	PIN	4	IS 1875 CL 5	28.4	325 BHN
3	HAND PUMP	1	TANSEE	26 KG DRY	ADD 10 LITRE POR OIL
2	TROLLEY FRAME COMPLETE	1	IS 2062 SE 62 W	1500	WD 5-5-2-05 5-2 ALT 1
1	TELESCOPIC JACK WITH TRAVERSE BASE	1	—	—	J/1073 C

6/6/94

OEW	THE ORIENTAL ENGG. WORKS PVT LTD YANUNA NAGAR		
DGN		GEN ARRGT OF LOADING / UNLOADING TROLLEY.	
DRN			
CKD			SCALE 1:10 OFF
TCD			SHT 5 OF 5
FOR B.H.E.L. HARDWAR			DRG NO.