FIRST ANGLE PROJECTION

(ALL DIMENSIONS ARE IN mm)

DRG. NO. 2-302-00-78809

SH. 1 OF 1

THE INFORMATION ON THIS DOCUMENT IS THE PROPERTY OF BHARAT HEAVY ELECTRICALS LIMITED. IT MUST NOT BE USED DIRECTLY OR INDIRECTLY IN ANY WAY DETRIMENTAL TO THE INTEREST OF THE COMPANY

GENERAL DIMENSIONAL LIMITS,FITS & TOLERANCES AS PER HY0230261

COMPUTER FILE NAME

REF. DRG. NO. 4-30200-58909 (Rev.02)

SIGN. AND DATE

INVENTORY NO

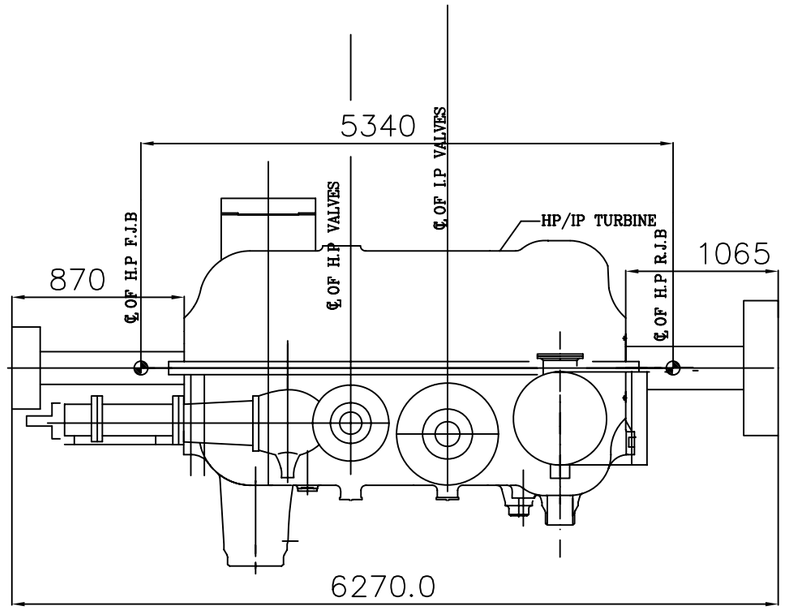

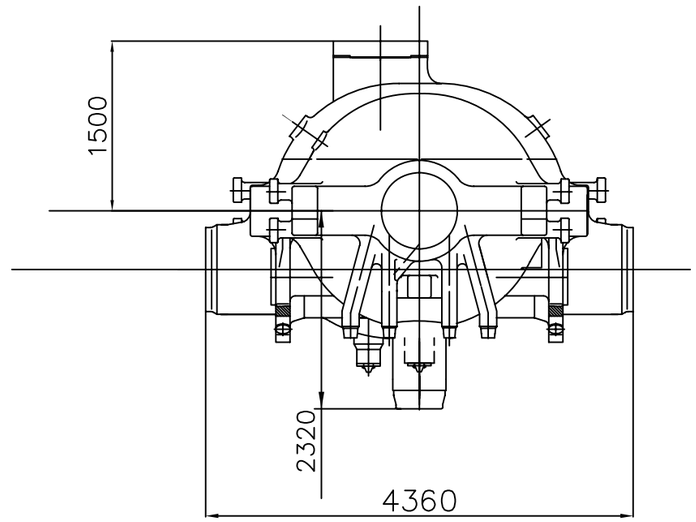

TYPE OF PRODUCT OR NAME OF PROJECT	HP+ IP TURBINE K30-16

BHARAT HEAVY ELECTRICALS LTD. HYDERABAD

	NAME	SIGN.	DATE	NO.OF VAR.
DRN.	GMM		19.01.09	NA
CHD.	DSR		19.01.09	
APPD.	CNVR		19.01.09	

REV.	DATE	ALTERED	REV.	DATE	ALTERED	REV.	DATE	ALTERED	REV.	DATE	ALTERED	REV.	DATE	ALTERED
		CHD/APPD			CHD/APPD			CHD/APPD			CHD/APPD			CHD/APPD
ZONE			ZONE			ZONE			ZONE			ZONE		

DEPT. LTP / DEPT. 415	UNTOL. DIMS. GR. ~~C/M/F~~		SCALE NTS	WEIGHT (KG) NA	REF. TO ASSY. DRG. NA	ITEM NO. NA	NO.OF ITEMS NA
TITLE HP+IP CASING-ROTOR ASSEMBLY FOR TRANSPORT				CARD CODE N.A.	DRAWING NO. 2-302-00-78810		REV. 00
					SHT. No 1	NO. OF SHT. 1	