NOTE:
1. ALL DIMENSIONS ARE IN MM
2. * SEGMENT ANGLES AS PER MANUFACTURERS STANDARD

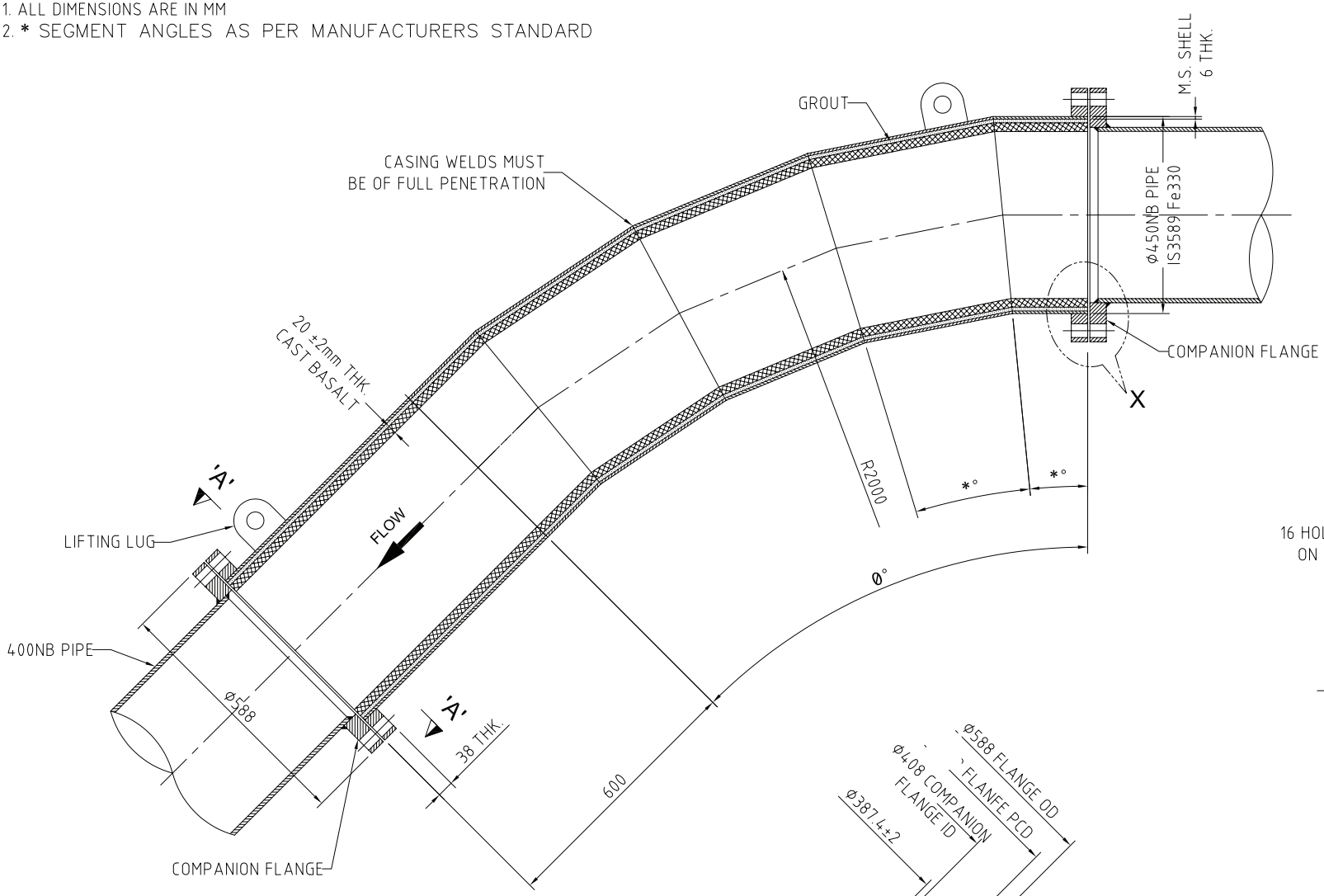

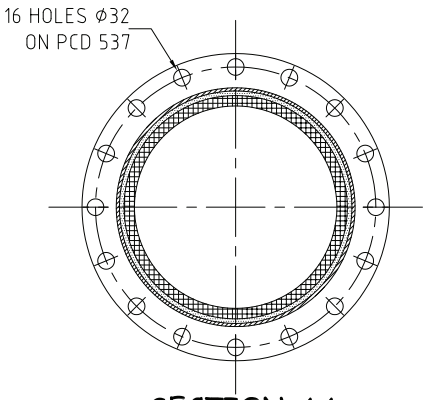

SECTION-AA

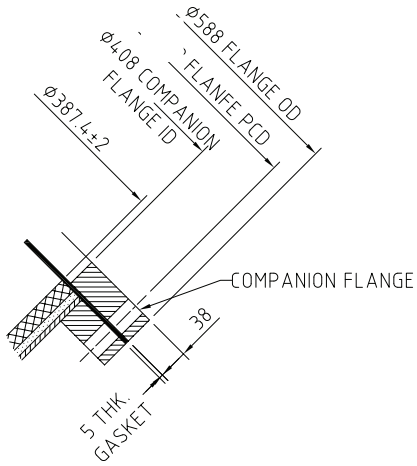

DETAIL-X

PROJECT : 2X660 MW SUPER-CRITICAL THERMAL POWER STATION
Unit 7 & 8, SURATGARH, RAJASTHAN
TITLE : G A OF 400NB CAST BASALT BEND