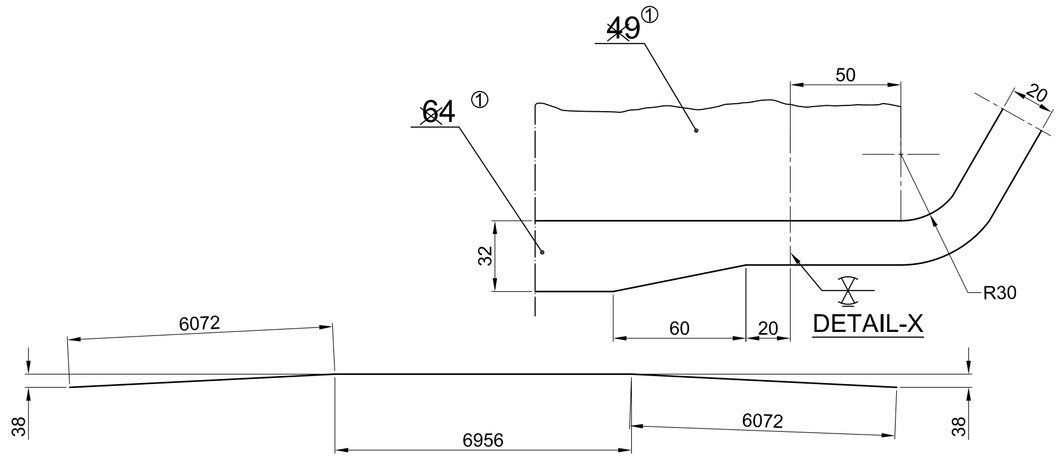

CAMBER

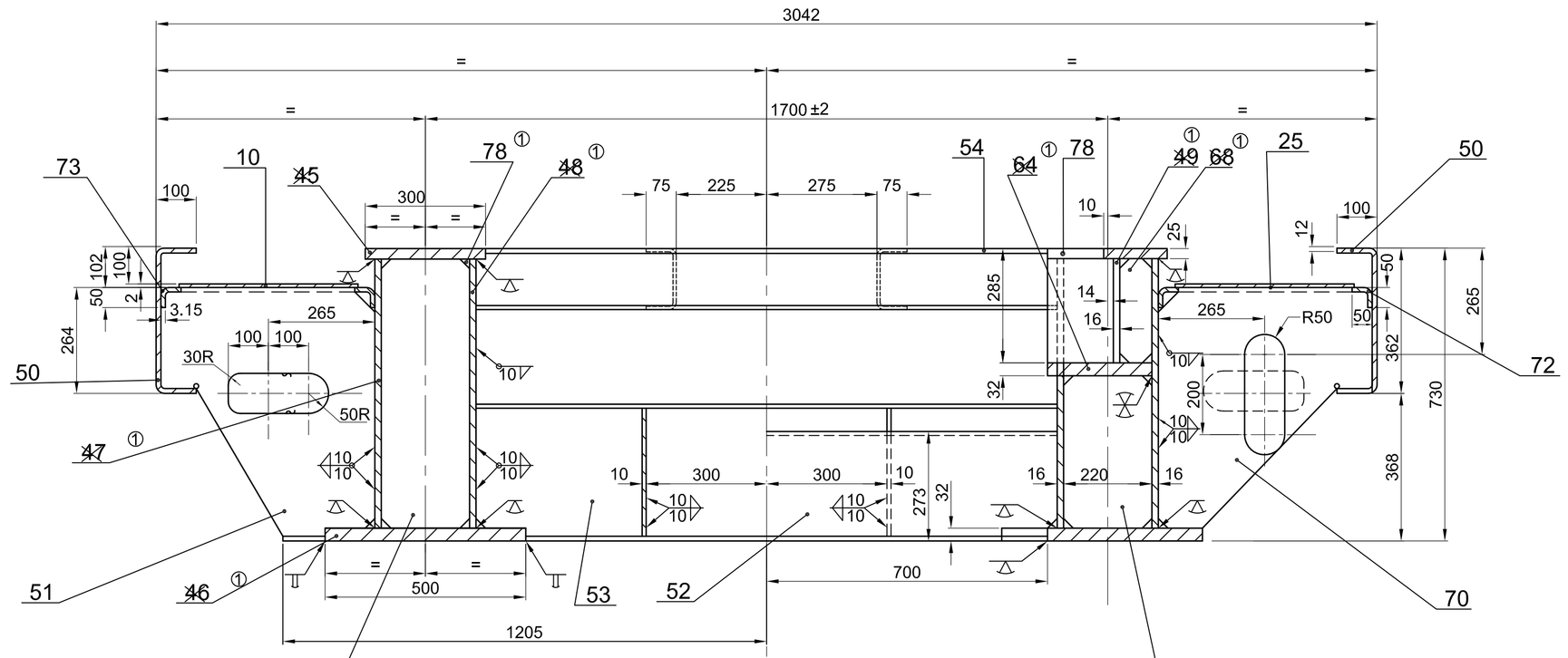

SEC-BB

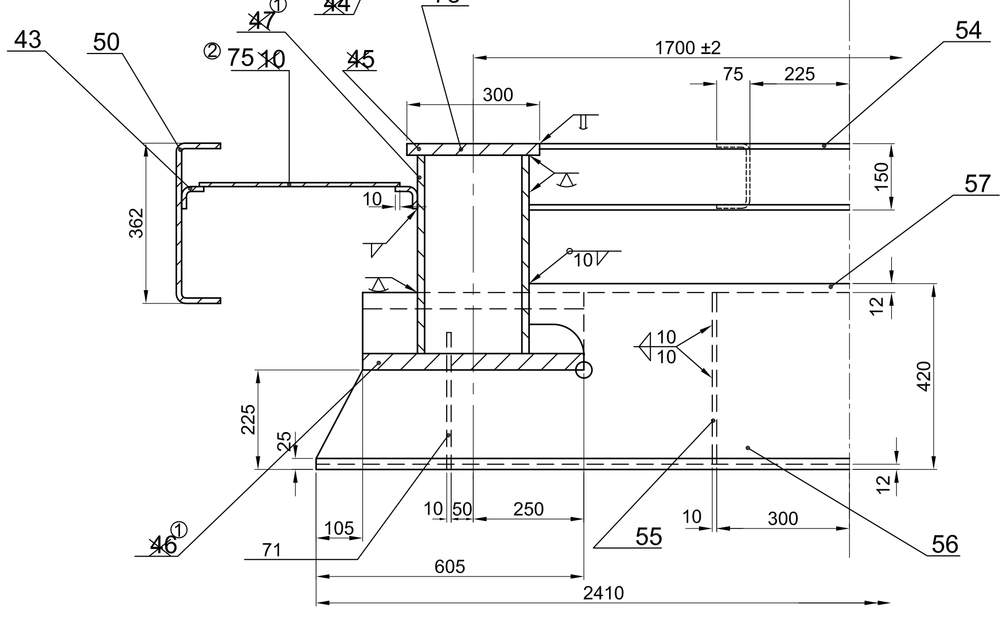

SEC-CC

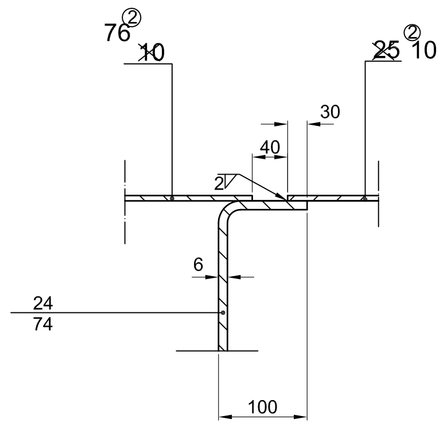

SEC-DD

NOTE:-

1. FOR U/F ASSLY CAB 1 & 2 END CENTRE REFER DRG. NO. 06/1/31/100 & 101
2. TO DRG.NO.06/1/31/105 IN LIEU OF REF. NO.44 TO 49,64 & 67 TO 69 OF THIS DRG. FROM LOCO.NO.HH285 AND ONWARDS.
3. ② ③ ALT. NO. 2 IS TO BE FOLOWED FROM LOCO NO. HH-394 & ONWARDS EXCEPT REF NO.-82 WHICH WILL BE FOLLOWED IN LIEU OF REF. NO. 29 FROM THE PRODUCTION YEAR 1999-2000 & ONWARDS.
4. ③ ALT 5 IS TO BE FOLLOWED FROM THE PRODUTION YEAR 2000-2001 & ONWARDS.
5. ⑦ ALT. 7 IS TO BE FOLLOWED FOR LOCO NO. HH-676 & ONWARDS.

ASSLY C&D NO. P301/214

⑦ TOLERANCE CHART FOR LONGBEAM U/F ASSLY.

SL. NO.	ITEM	DEVIATIONALLOWED
1	SIDE DEFLECTION	< 10 mm.
2	SAGGING	NOT PERMITTED
3	TWIST	< 5 mm.
4	CAMBER AT LONG BEAM	AS SPECIFIEDIN DESIGN DRAWING

REF. NO.	C & D. NO.	PART DRG. NO.	DESCRIPTION	NO/ LOCO	MATL	SPECN	WT. EAC. FIN SHED
⑦	87	06/4/31/124	TIE ANGLE	1	STEEL	IRS-M41	
⑤	86	P301/236	- HEX. HD. SCREW M8X20	1	STEEL	IS:1364	
	85	P301/235	- SPRING WASHER M8B	1	SPRING STEEL	IS:3063	
	84	P301/234	06/4/31/119 PAD 30X30X16 THK.	1	STEEL	IS:2062 GR-6	
④	83	P301/223	06/4/31/110 TIE ANGLE	1LH 1RH	STEEL	IRSM-41 ~~IS:2062 FE-410WC~~	
	82	P301/222	06/2/31/106 CENTRE PIVOT ASSLY	2	STEEL	-	
② ⑦	81	P301/221	06/4/31/109 TIE ANGLE	2LH 1RH	STEEL	FE-410WC IRSM-41	
④ ② ⑦	80	P301/220	06/4/31/108 TIE ANGLE	1	STEEL	''	
⑦	~~79~~	P301/219	06/4/31/107 ~~TIE ANGLE~~	~~1~~	STEEL	~~IS:2062 FE-410WC~~ IRSM-41	
①	78	P301/217	06/1/31/105 LONGITUDINAL BEAM ASSLY	1L.H 1R.H	STEEL	-	
④	77	P301/147	06/4/31/66 GUSSET	4	STEEL	IRSM-41	10.9
②	76	P301/144	FLOOR SHEET 1254X495X2 THK.	2	STEEL	IRSM-41	
	75	P301/143	FLOOR SHEET 1100X495X2 THK.	2	STEEL	IRSM-41	
⑦ ②	74	P301/142	06/4/31/65 ANGLE	1	STEEL	IS:2062 GR-6	12.9
	73	P301/089	- ANGLE 50X50X3.15 THKX1560 lg.	4	STEEL	IRSM-41	
	72	P301/088	- ANGLE 50X50X3.15 THKX1800 lg.	4	STEEL	IRSM-41	
④	71	P301/087	06/4/31/64 RIB [396X100X10 TH]	2	STEEL	IS:2062 GR-6	4.0
⑥	70	P301/216	06/4/31/104 ANGLE	1	STEEL	-	18.6
	~~69~~	~~P301/079~~	~~06/4/31/62~~ ~~GUSSET~~	~~12~~	~~STEEL~~	IS:2062 GR-B	~~0.58~~
	~~68~~	~~P301/078~~	~~06/4/31/61~~ ~~GUSSET~~	~~12~~	~~STEEL~~	IS:2062 GR-B	~~8.0~~
	~~67~~	~~P301/077~~	~~06/4/31/60~~ ~~RIB~~	~~2~~		IS:2062 GR-B	
⑥	66	P301/180	06/3/31/85 LATERAL DAMPER BKT.ASSY.	4		IS:2062 Fe410 We	
④	65	P301/159	06/4/31/72 END SEALING SHEET	8		IRSM-41	
	~~64~~	~~P301/074~~	~~06/3/31/57~~ ~~TRANSFORMER BASE ASSLY~~	~~2~~	~~STEEL~~	-	
⑥	63	P301/073	06/4/31/56 Z-SECTION	1	STEEL	IS:2062 GR-B	5.56
	62	P301/153	06/4/31/71 BOTTOM PLATE	2			
⑦	61	P301/157	06/4/31/68 TIE ANGLE	10 NOS.			
⑥	60	P301/148	06/4/31/67 RIB	1			
④ ①	59	P301/064	06/3/31/52 CROSS MEMBER ASSLY	1	STEEL	-	
	58	P301/063	06/4/31/51 RIB	2	STEEL	IS:2062 GR-B	50.3
⑥	57	P301/062	06/4/31/50 PLATE 12 THK.	1	STEEL	,,	76.6
④ ②	56	P301/061	06/4/31/49 ANGLE	1	STEEL	IS:2062 GR-B	138
	55	P301/060	06/4/31/48 RIB	2	STEEL	IS:2062 GR-B	6.6
④	54	P301/057	06/4/31/47 CHANNEL ASSLY	1	STEEL	-	68.6
	53	P301/054	06/4/31/46 CHANNEL ASSLY	1	STEEL	-	68.1
	52	P301/053	06/4/31/45 Z- SECTION	1	STEEL	IS:2062 GR-B	68.6
⑦ ⑥	51	P301/215	06/4/31/103 SL. SUPPORT	1	STEEL	IS:2062 GR-B	19.2
	50	P301/051	06/4/31/43 SIDE SILL	2	STEEL	IS:2062 GR-B	258.0
	~~49~~	~~P301/050~~	~~06/4/31/42~~ ~~VERT. SUPPORT~~	~~2~~	~~STEEL~~	IS:2062 GR-B	~~82.0~~
	~~48~~	~~P301/049~~	~~06/4/31/41~~ ~~LONG BEAM VERT PLATE~~	~~1RH 1LH~~	~~STEEL~~	IS:2062 GR-B	
	~~47~~	~~P301/048~~	~~06/4/31/40~~ ~~LONG BEAM VERT PLATE~~	~~2~~	~~STEEL~~	IS:2062 GR-B	
	~~46~~	~~P301/047~~	~~06/4/31/39~~ ~~LONG BEAM BOTTOM PLATE~~	~~1RH 1LH~~	~~STEEL~~	IS:2062 GR-B	
	~~45~~	~~P301/046~~	~~06/4/31/38~~ ~~LONG BEAM TOP PLATE~~	~~1RH 1LH~~	~~STEEL~~	IS:2062 GR-B	

⑦A	DY. Mgr. LME BHEL	DRG. NO. UP DATED.		11.11.08
⑦	DY.CEE/D	TOLERANCE CHART INCLUDED AS PER RDSO'S LETT. NO. EL/3.2.119 DT-15/ 16-9-2003. NOTE 5 ADDED		sd-
⑥	DY.CEE/D	REF. NO. 5 TO 9, 11 TO 13, 18 TO 24, 28, 31 TO 35 38, 41, 50 TO 58, 60, 62, 63,71, 74 & 84 MATL. SPECN IS:2062 GR-C WERE 2062 Gr.B REF NO. 14 TO 16, 25 TO 27, 36, 37, 40, 42, 61, 65, 70, 72, 73,75, TO 77, 79 TO 81 & 83 MATL SPECN IRS:M41 WERE IS:5986 FE-410.		sd-
⑤	DY.CEE/D	REF. NO. 84, 85 & 86 AND NOTE 4 ADDED		sd-
④	DY.CEE/D	MATERTAL SPECN AGAINST REF.NO. 50.52 53, 54, 56, 58, 59, 62, 71 & 77, CHANGED TO IS:2062 FE 410 WC, AGAINST REF. NO. 61, 65, 79, 80, 81 & 83 CHANGED TO IRS-41		
③	DY.CEE/D	REF. NO.61 QTY / LOCO 10 WAS 8		sd-
②				
①				
ALT. NO.	AUTHY	DESCRIPTION		DATED INITIAL

IS:3073

SURFACE ROUGHNESS VALLUE TO IS:3073													
NUMBER	N_1	N_2	N_3	N_4	N_5	N_6	N_7	N_8	N_9	N_{10}	N_{11}	N_{12}	
Ra µm	0.025	0.05	0.1	0.2	0.4	0.8	1.6	3.2	6.3	12.5	25	50	
SYMBOL													

WELDING SYMBOL IS FOLLOWED TO IS:813

ASSY. C & D NO. P301/214

DRAWN	
CKD. BY	
S/ELDO (M)	-sd-
AME(D)	
DY CEE (D)	
DATE	
SCALE	1:10, 1:5
APPROVAL REF. NO.	

REFERENCE DRG. NO.

06/1/31/101

SECTION AND DETAILS OF UNDER FRAME (CENTRE)

CHITTARANJAN LOCOMOTIVE WORKS

USED FOR LOCO WAGA 7 (5000 HP)

DRAWING NO. 06 / 1 / 31 / 102