Boiler Auxiliary Plant , Bharat Heavy Electricals Limited , Ranipet Tamilnadu- 632406

Purchase Department

Enquiry No: BAP/PUR/9550663E dt.14.08.2015
Due on:09.09.2015

Item : Sleeve Tubes, Set Ring & Clutch

Synopsis :

(i) **Annexure-I**
- (a) Pre-Qualification Requirement
- (b) Rate contract terms and conditions
- (b) Description of item , R/C Quantity details , Drawing and Relevant specification

(ii) **Annexure-II:** General terms and conditions of the tender.

(iii) **Annexure-III:** Commercial terms and conditions Annexure, MSME split provision & CA certificate format.

Contact Details

Shri. T Venugopal Sr Manger/Purchase Email : tvgopal@bhelrpt.co.in Phone : 04172- 284621 Fax : 04172-241131	Shri. Biswajit Rath Engineer / Purchase Email : biswajit@bhelrpt.co.in Phone : 04172-284007 Fax : 04172-241131

Annexure–I To Open Tender ref: BAP/PUR/9550663E dt.14.08.2015
For Supply Of "Sleeve Tube", "Set Ring" and "Clutch" Due on : 09.09.2015
Pre-Qualification Requirement

01. The bidder shall have experience of having successfully executed general fabrication of mild steel components and have successfully manufactured and supplied as per applicable codes and standards and shall submit the reference for BHEL review. The Vendor shall furnish at least one job order executed/under execution for steel fabrication specific requirement of the offered job.
02. The manufacture/supplier must be having their own fabrication shed with adequate plants and machineries to carry out the general fabrication to manufacture and supply of the indented items to ensure quality product with timely delivery. Details such as a) Address b) Contact Person etc. of the should be furnished.
03. The Manufacturer must submit copies of Work Order/ Purchase Order and Client's certificate detailing about (i) Time of Completion, (ii) Quality ofWork & (iii) Value of work completed for the general fabrication the bidder manufactured and supplied.
04. The bidder should procure raw materials from the reputed sources and should be able to furnish the test certificates.
05. The bidder should employ the skilled man power as required for the intended component manufacturing meeting design drawing requirements.
06. The bidder should have necessary quality procedures/quality plans in place to ensure component quality.
07. The bidder should have all required plant and machineries (Viz Welding, Grinding, Drilling, Press of required capacity, Machining, Electrode oven etc.) in house to ensure complete manufacturing and supply of the intended component.
08. Offers of the Vendor/Supplier not agreeing/failing to submit required documents to any of the above will be liable for rejection.

Annexure–I To Open Tender ref: BAP/PUR/9550663E dt.14.08.2015
For Supply Of "Sleeve Tube", "Set Ring" & "Clutch" , Due on : 09.09.2015
Rate Contract terms and conditions

Tender will be processed through Rate contract with validity of 01 year from the date of R/C LOI OR PO

1. Rate shall be firm and fixed till completion of supplies.

2. The framework agreement shall be valid for one year from the date of finalization of LOI/PO.

3. Separate addendum will be issued against firm requirement as and when requirement is there.

4. Framework Agreement quantity is tentative. No minimum qty is guaranteed.

5. Applicable duties and taxes shall be quoted extra separately.

6. BHEL reserves the right for performance monitoring, quality surveillance at supplier's end and short closing of contract.

Annexure–I To Open Tender ref: BAP/PUR/9550663E dt.14.08.2015
For Supply Of "Sleeve Tube", "Set Ring" & "Clutch" , Due on : 09.09.2015
Description of Item, Qty , Drawing and Relevant Specificatio

Sl No	Description of Itrm	R/C (Qty)	Unit	Delivery Destination
01	942850070000 Set Ring As Per Drg: 6172-0038/Rev 01, Test Certificate Verification For Chemistry, Hardness With Dimensional Inspection. One coat of temporary rust preventive oil Minimum DFT=20 micron	**9000**	**No**	BHEL/Stores/ Ranipet
02	942850210000 Sleeve Tube As Per Drg: 6172-0047/Rev 00, Test Certificate Verification For Chemical, Mechanical Properties with Dimensional Inspection. For Machined surface Temporary Rust Preventive Oil Minimum DFT=20 Micron, For Other Areas Red oxide Zinc Chrome Primer TO IS 2074 Minimum DFT = 25 Micron & Synthetic Enamel Finish Paint To IS 2932 Minimum DFT=20 Micron (SHADE SMOKE GREY)	**1500**	**No**	BHEL/Stores/ Ranipet
03	942850200000 Sleeve Tube As Per Drg: 6172-0046/Rev 01, Test Certificate Verification For Chemical, Mechanical Properties with Dimensional Inspection. For Machined surface Temporary Rust Preventive Oil Minimum DFT=20 Micron, For Other Areas Red oxide Zinc Chrome Primer TO IS 2074 Minimum DFT = 25 Micron & Synthetic Enamel Finish Paint To IS 2932 Minimum DFT=20 Micron (SHADE SMOKE GREY)	**13428**	**No**	BHEL/Stores/ Ranipet
04	942850170000 Sleeve Tube As Per Drg: 6172-0043/Rev 00, Test Certificate Verification For Chemical, Mechanical Properties with Dimensional Inspection. For Machined surface Temporary Rust Preventive Oil Minimum DFT=20 Micron, For Other Areas Red oxide Zinc Chrome Primer TO IS 2074 Minimum DFT = 25 Micron & Synthetic Enamel Finish Paint To IS 2932 Minimum DFT=20 Micron (SHADE SMOKE GREY)	**4500**	**No**	BHEL/Stores /Ranipet
05	942850050000 Clutch As Per Drg: 6172-0036/Rev 00, Test Certificate Verification For Chemistry and Hardness With Dimensional Inspection. Temporary Rust Preventive Oil Minimum DFT=20 Micron.	**600**	**No**	BHEL/Stores /Ranipet

FIRST ANGLE PROJECTION (ALL DIMENSIONS IN MILLIMETRES)

05-229 C

CAUTION THE INFORMATION ON THIS DOCUMENT IS THE PROPERTY OF BHARAT HEAVY ELECTRICALS LTD IT MUST NOT BE USED DIRECTLY OR INDIRECTLY IN ANY WAY DETRIMENTAL TO THE INTEREST OF THE COMPANY

DRAWING NO 6172-0038/01

63 (1.6)

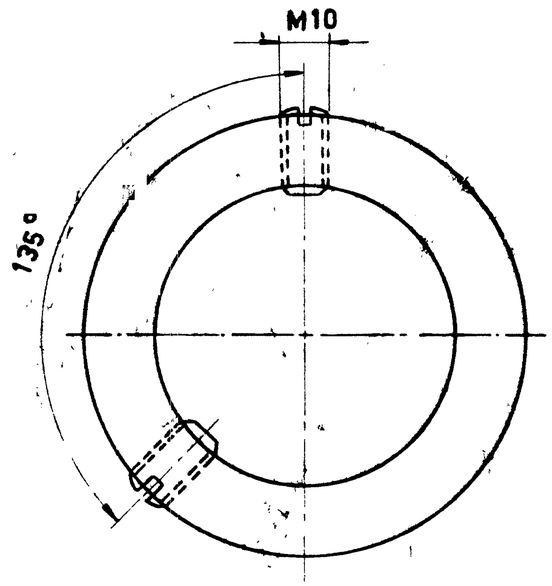

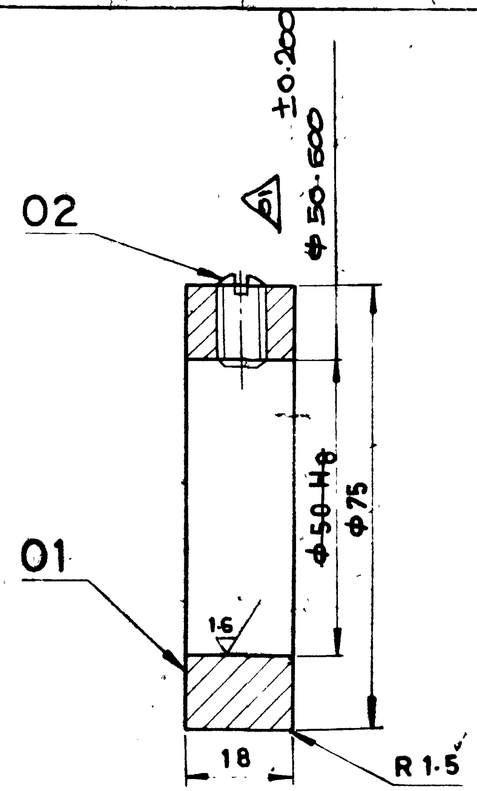

VARIANT NO.	ITEM NO.	DESCRIPTION	STD	BPS CODE	ITEM NO / VAR NO	MATL CODE / MATL SPEC	A C	UNIT	UNIT WT / QTY	SG
	02	SCRU GRUB SLT CP 6.6 M 10 X 16				IS 2388			0007 / 2	
	01	ROUND DIA 75 L-18				SA-105			0330	
01		SET RING		6172-0038-21		94-285-007 / –			0344	

TYPE OF PRODUCT OR NAME OF CUSTOMER PROJECT

Bharat Heavy Electricals Ltd.,
BOILER PLANT UNIT
TIRUCHIRAPALLI-620 014

	NAME	SIGN	DATE	NO. OF SHEETS
DRN	N.D.V.KUMAR		01.01.82	
CHD	T.KRISHNAN		01.01.82	
APPD	S KALIBULLA		01.01.82	

REV	DATE	ALTERED / CHECKED
01	250398	

SET RING INNER DIMN. CHANGED.

DEPT	GRADE OF UNTOL. DIM	SCALE	WEIGHT (kg)	REF TO ASSY / OLD DRG	ITEM NO
SS	¢ M F	1:1	0.344	4-79-016-00038	

CODE 850

TITLE: SET RING

CARD CODE	DRAWING NO	REV
U 01	6172-0038	01

FIRST ANGLE PROJECTION (ALL DIMENSIONS IN MILLIMETRES)

05-249/B

REV 01	DATE	ALTERED	REV 02	DATE	ALTERED
		CHECKED			CHECKED

CAUTION THE INFORMATION ON THIS DOCUMENT IS THE PROPERTY OF BHARAT HEAVY ELECTRICALS LTD. IT MUST NOT BE USED DIRECTLY OR INDIRECTLY IN ANY WAY DETRIMENTAL TO THE INTEREST OF THE COMPANY

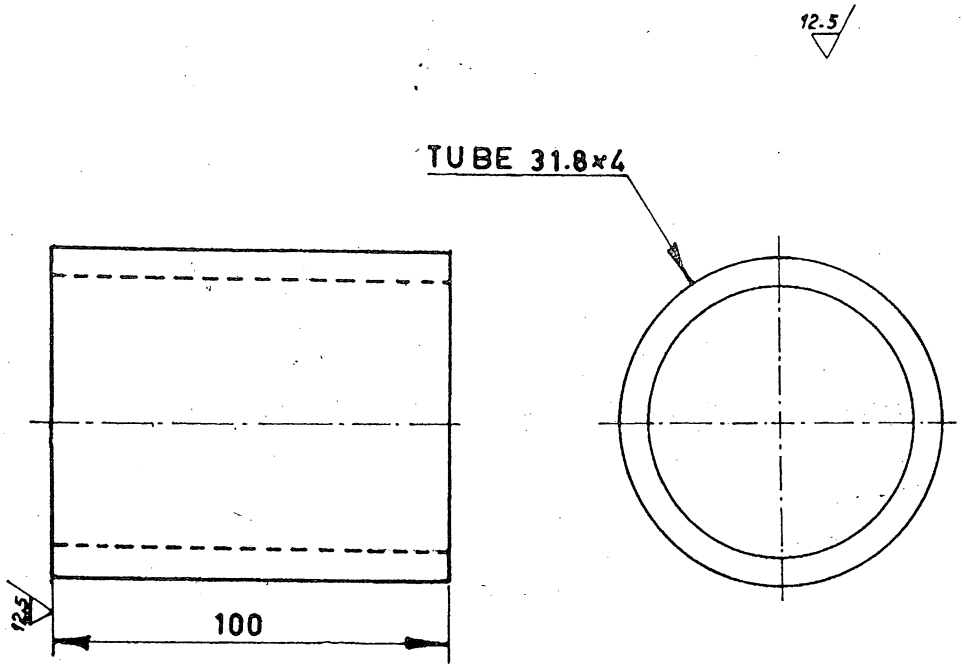

NOTE

★ 1. MARK THE ITEM BY BPS CODE AND BIN CODE No.

VAR No.	★ BPS CODE	DESCRIPTION	STD	★ MATL CODE / MATL SPEC	A / C	UNIT	UNIT WT / QTY
01	6172 0047 21	SLEEVE TUBE-2		94 285 021			0.307

MATERIAL :- SA 210GR A1

Bharat Heavy Electricals Ltd.,
BOILER PLANT UNIT
TIRUCHIRAPALLI-620 014

	NAME	SIGN	DATE
DRN	T. KRISHNAN		17.12.82
CHD	L. GOKUL		
APPD	S. KALIBULLA		

DEPT.	GRADE OF UNTOL. DIM	SCALE	WEIGHT (kg)	REF TO ASSY / OLD DRG	ITEM NO.
SS	±/M/f	NTS	0.307	4-79-016-00039	
CODE 850					

TITLE	CARD CODE	DRAWING NO.	REV
SLEEVE TUBE	U 01	6172 0047	0

Size A4

FIRST ANGLE PROJECTION (ALL DIMENSIONS IN MILLIMETRES)

REV	DATE	REVISED	REV	DATE	ALTERED
01	22/8/87	KJA	02		CHECKED

I.D. TOLERANCE CHANGED

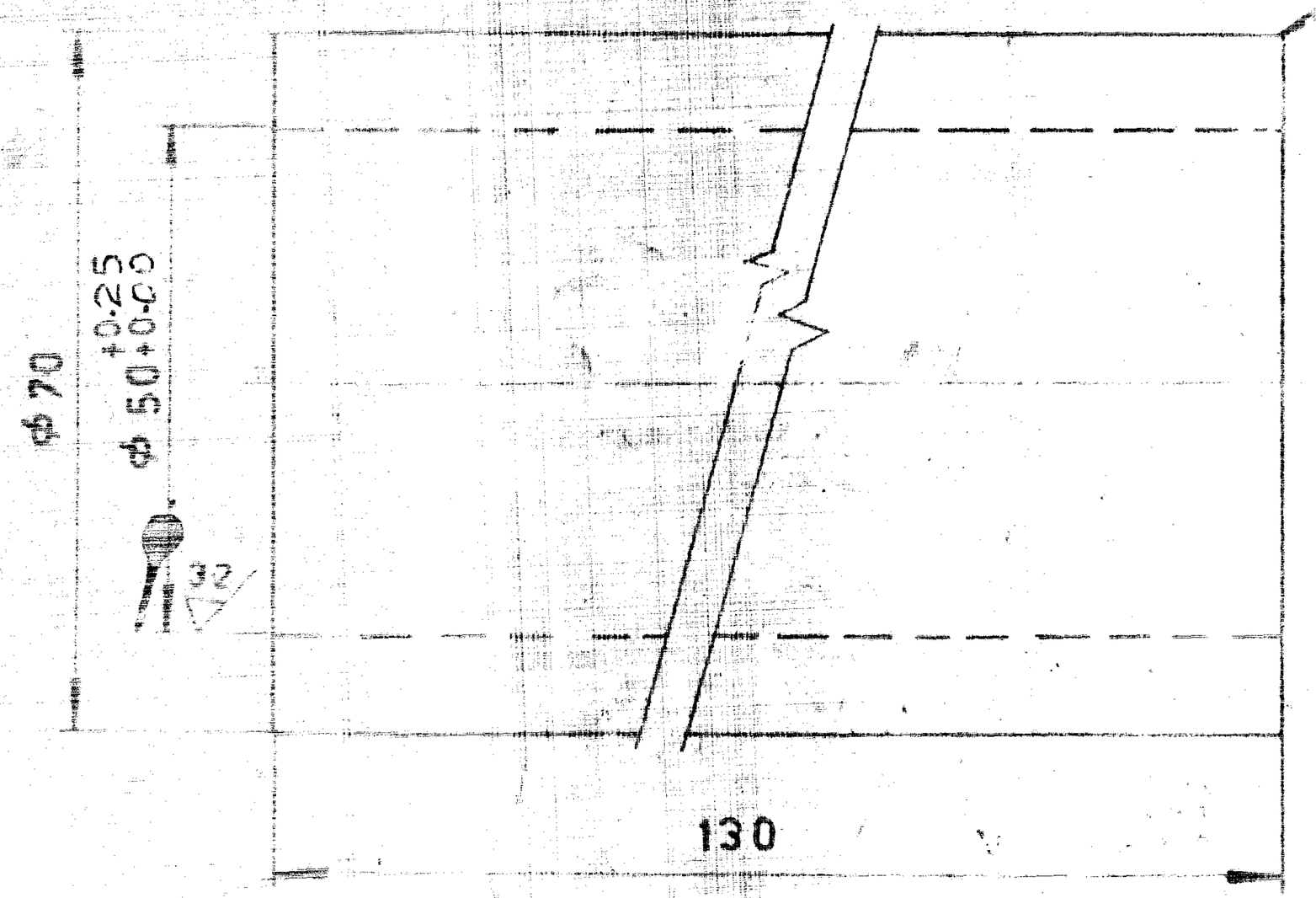

VAR. NO.	DESCRIPTION	BPS CODE	MAT. CODE / MAT. SPEC.	
.01	SLEEVE TUBE	6172 0046 21	94 285 020 —	1/920

MATERIAL : SA 106 Gr. B

Bharat Heavy Electricals Ltd., POWER PLANT UNIT TIRUCHIRAPALLI 620014

DRN	N.D.V.KUMAR		01.01.82
CHK	T.KRISHNAN		01.01.82
APPD	S.KALIBULLA		01.01.82

SS 850	1:1	1.924	4-79-016-00039	—

SLEEVE TUBE

CARD CODE U 01

6172-0046 01

FIRST ANGLE PROJECTION (ALL DIMENSIONS IN MILLIMETRES)

DATE	ALTERED	REV	DATE	ALTERED
	CHECKED	02		CHECKED

(12.5)

CAUTION THE INFORMATION ON THIS DOCUMENT IS THE PROPERTY OF BHARAT HEAVY ELECTRICALS LTD. IT MUST NOT BE USED DIRECTLY OR INDIRECTLY IN ANY WAY DETRIMENTAL TO THE INTEREST OF THE COMPANY

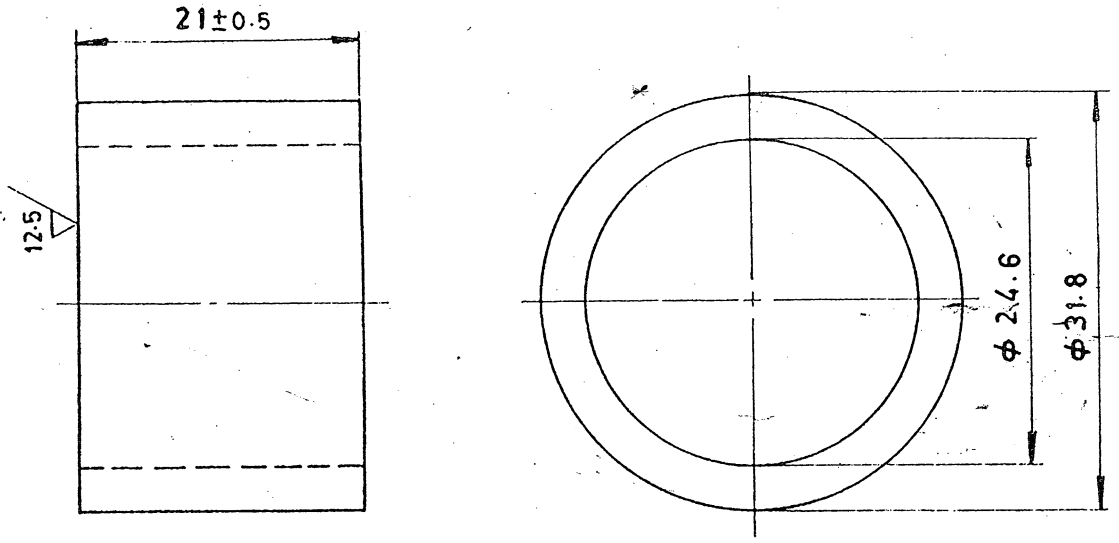

VAR. No.	DESCRIPTION	BPS CODE	STD	MATL CODE / MATL SPEC	A/C	UNIT	UNIT WT / QTY
01	SLEEVE	6172 0043 21		94 285 017 / –			0.060

MATERIAL : SA 210 : Gr. A1

Bharat Heavy Electricals Ltd.,
BOILER PLANT UNIT
TIRUCHIRAPALLI-620 014

	NAME	SIGN	DATE
DRN	N.D.V.KUMAR		01.01.82
CHD	T.KRISHNAN		01.01.82
APPD	S.KALIBULLA		01.01.82

DEPT.	GRADE OF UNTOL. DIM	SCALE	WEIGHT (kg)	REF TO / OLD DRG	ITEM NO.
SS	Q/M/R	2:1	0.060	4 79 024 00245	–
CODE 850					

TITLE	CARD CODE	DRAWING NO.	REV
SLEEVE	U 01	6172-0043	00

Size A4

FIRST ANGLE PROJECTION (ALL DIMENSIONS IN MILLIMETRES)

05 229 C

DRAWING NO. 6172-0036

CAUTION: THE INFORMATION ON THIS DOCUMENT IS THE PROPERTY OF BHARAT HEAVY ELECTRICALS LTD. IT MUST NOT BE USED DIRECTLY OR INDIRECTLY IN ANY WAY DETRIMENTAL TO THE INTEREST OF THE COMPANY

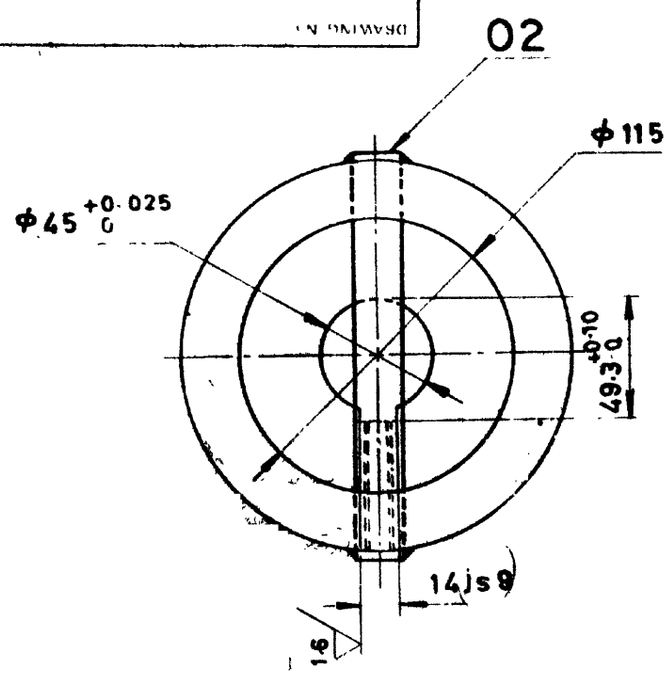

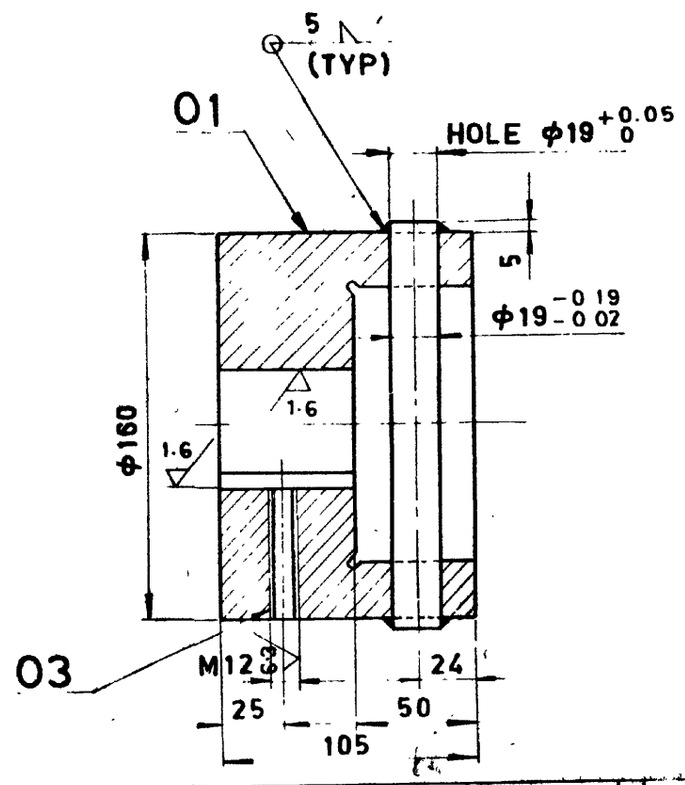

12.5 (1.6 6.3)

VARIANT NO.	ITEM NO	DESCRIPTION	STD	BPS CODE	ITEM NO	MATL CODE	A C	UNIT	UNIT WT	SR
	03	SCRU ORB SLT CP 6·6 M12 X 30				IS: 2388			0.019	
									1	
	02	PIN DIA 22 L-170				SA-105			0.378	
									1	
	01	ROUND DIA. 165 L-105				SA 105			11.682	
									1	
01		CLUTCH		6172-0036-21		94-285-005			12.079	
					VAR NO.	MATL SPEC			QTY	

TYPE OF WELD	ELECTRODE SPECN.	LENGTH OF WELD
5Δ	E 6013	0.1m

TYPE OF PRODUCT
OR NAME OF
CUSTOMER PRODUCT

Bharat Heavy Electricals Ltd.,
BOILER PLANT UNIT
TIRUCHIRAPALLI-620 014

	NAME	SIGN	DATE	NO. OF VAR
DRN	N.D.V.KUMAR		01.01.82	
CHD	T. KRISHNAN		01.01.82	
APPD	S.KALIBULLA		01.01.82	

REV	DATE	ALTERED	CHECKED
01	6.5.83	R.K. ARUL BABU	

1) WT. OF ITEM 03 CORRECTED IN ITEM 02
2) PIN φ19 IS CORRECTED AS PIN φ22, CORRESPONDINGLY WT IS ALSO CORRECTED
3) IN ITEM 01 φ16 IS CORRECTED AS φ165, WT CORRECTED: TOTAL WT CORRECTED

MTL	GRADE OF DUCTIL IRON (CM)	SCALE	WEIGHT (kg)	REF TO ASSY / OLD DRG	ITEM NO
SS 850		1:2·5	12·079	4-79-026-00061	

TITLE	RD CODE	DRAWING NO.	REV
CLUTCH	U 01	6172-0036	00

Size A3