FIRST ANGLE PROJECTION

(ALL DIMENSIONS ARE IN mm)

DRG NO. BCE-3-1069A

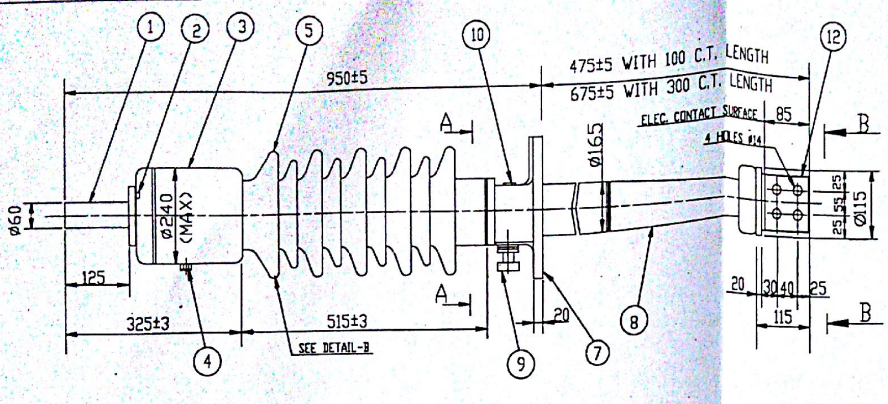

QTY.	IT.	DESCRIPTION	MATERIAL
1	01	TOP TERMINAL	COPPER
2	02	FILLING PLUG	S.STEEL
1	03	TOP CAP	AL. ALLOY
1	04	OIL LEVEL GAUGE	TOUGHENED GLASS
1	05	PORCELAIN INSULATOR	PORCELAIN
1	06	MOUNTING FLANGE	AL. ALLOY
1	07	BOTTOM PORCELAIN	PORCELAIN
1	08	TEST TAP	AL/NYLON
1	09	BOTTOM TERMINAL	COPPER FORGING
1	10	RATING PLATE	AL. ANODISED

TECHNICAL DETAILS

RATED VOLTAGE	: 52kV
RATED CURRENT	: 3150 A
DRY PF WITHSTAND VOLTAGE ONE MINUTE	: 105 kV
BIL	: 250 kVp
STANDARD APPLICABLE	: IS 2099/IEC137
MINIMUM CREEPAGE DISTANCE	: 1300 mm
ALTITUDE	: ≤ 1000 m
ANGLE OF MOUNTING	: 30°
APPLICATION	: OIL-AIR

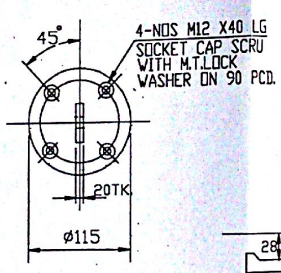

SECTION-BB

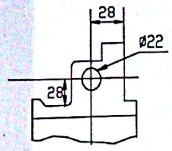

DETAIL-A

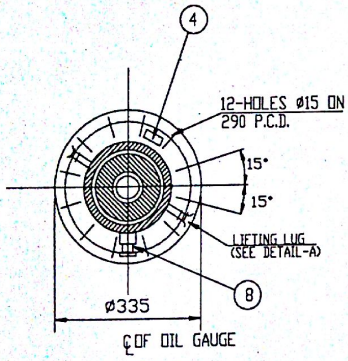

SECTION-AA

DETAIL-B

TYPE OF PRODUCT
OR
NAME OF CUSTOMER/PROJECT

BHARAT HEAVY ELECTRICALES LTD.
BHOPAL

	NAME	SIGN	DATE	NO. OF VAR
DRN	S.C.SOY		16/04/10	
CHD	A.DHAMIJA			
APPD	A.DHAMIJA			

REV	DATE	ALTERED / CHECKED

DEPT	CODE	SCALE	WEIGHT (KG.)	REF TO ASSY DRG	ITEM NO.	NO. OF ITEM
BIE	421	NTS	-	0 538 01 01012		

TITLE
52 kV-O.I.P CONDENSER BUSHING

CARD CODE

DRAWING NO. BCE-3-1069A REV 00

SHEET NO. 1 NO. OF SHEETS 1

THE INFORMATION ON THIS DOCUMENT IS THE PROPERTY OF BHARAT HEAVY ELECTRICALS LTD. IT MUST NOT BE USED DIRECTLY OR INDIRECTLY IN ANY WAY DETRIMENTAL TO THE INTEREST OF THE COMPANY.

INVENTORY NO. SIGN.DATE REF.DRG.NO.

Scanned by CamScanner