FIRST ANGLE PROJECTION

DRG NO. BCE-3-1216

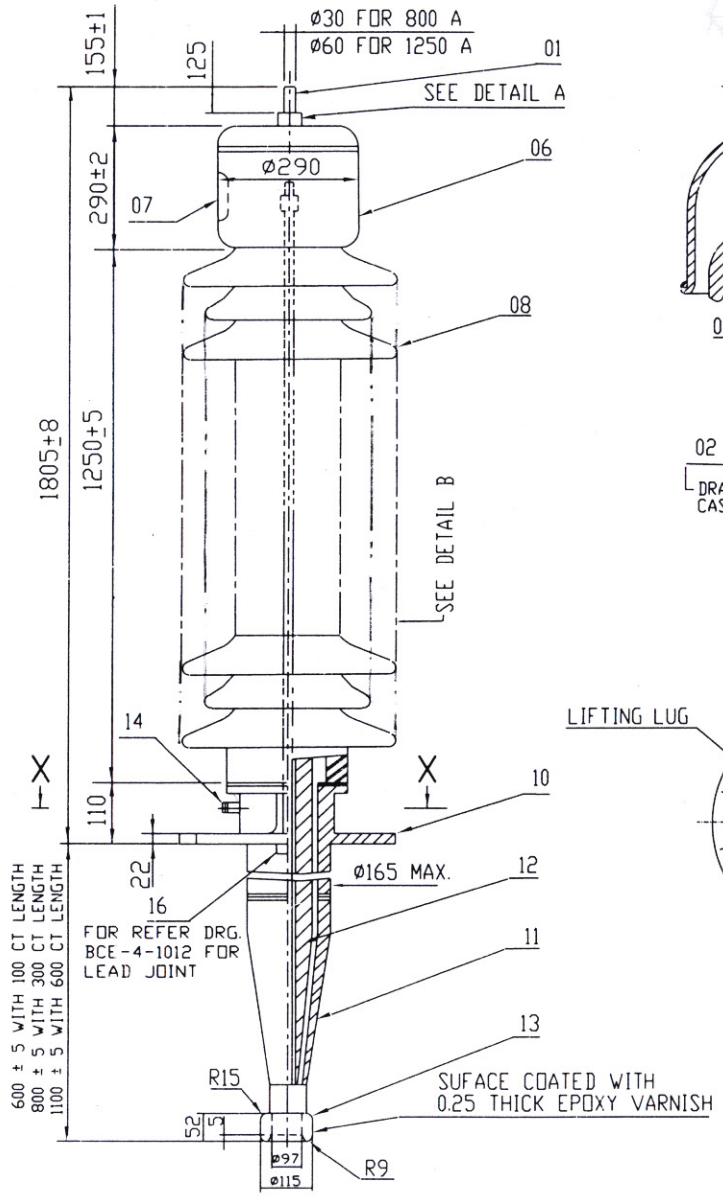

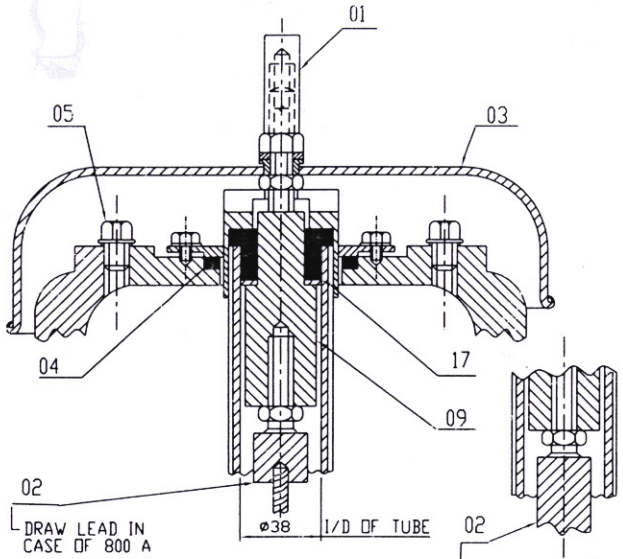

DETAIL-A

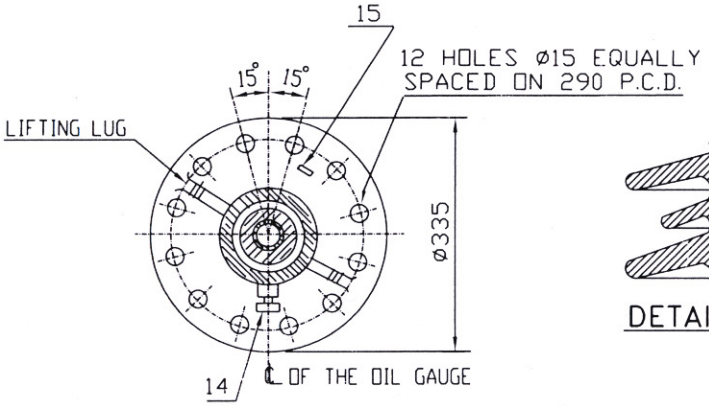

SECTION -XX

DETAIL-B

QTY.	ITEM	DESCRIPTION	MAT
1	01	TOP TERMINAL	BRASS
1	02	LEAD ASSY.	COPPER FLEX
1	03	CORONA SHIELD	AL ALLOY
1	04	'O'SEAL	N RUBBER
2	05	FILLING PLUG	S.STEEL
1	06	TOP CAP	AL ALLOY
1	07	OIL LEVEL GAUGE	GLASS
1	08	PROCELAIN INSULATION TOP	PORCELAIN
1	09	PULL THROUGH CONNECTOR	COPPER
1	10	MOUNTING FLANGE	AL. ALLOY
1	11	BOTTOM PORCELAIN	PORCELAIN
1	12	CONDENSER BUSHING	K.PAPER
1	13	STRESS SHIELD	AL ALLOY
1	14	TEST TAP	ST/NYLON
1	15	RATING PLATE	AL ALLOY
1	16	LEAD CONNECTOR	COPPER
1	17	RUBBER SEAL	N.RUBBER

TECHNICAL DETAILS

RATED VOLTAGE	145 kV
RATED CURRENT	800/1250A
1MIN 50HZ DRY WITHSTAND	275 kV
LIGHTNING IMPULSE 1-2/50 μ SEC.FULL WAVE	650 kVp
RATEDFREQUENCY	50 HZ
STANDARD APPLICABLE	IS 2099/IEC 137
MINIMUM CREEPAGE DISTANCE	4500 mm
APPROX OIL QTY	30 LITRES
INSTALLATION ANGLE FROM VERTICAL	30° MAX
TRANSPORTATION ANGLE FROM HORIZONTAL	15°MIN
TYPE OUTDOOR OIL IMMERSED BUSHING	
APPROX.WEIGHT	200 KGS
ARCING HORNS (ADJ. GAP 500-800)	OPTIONAL

THE INFORMATION ON THIS DOCUMENT IS THE PROPERTY OF BHARAT HEAVY ELECTRICALS LIMITED
IT MUST NOT BE USED DIRECTLY OR INDIRECTLY IN ANY WAY DETRIMENTAL TO THE INTRES

REV	DATE	ALTERED / CHECKED
02	25.9.06	

DRG. COMPUTERISED

TYPE OF PRODUCT
OR
NAME OF CUSTOMER/PROJECT

BHARAT HEAVY ELECTRICALES LTD.
BHOPAL

	NAME	SIGN	DATE	NO. OF VAR
DRN	B.R.MOHE	Sd/-	31.8.92	
CHD	H.L.	Sd/-	31.8.92	
APPD	R.K.A.	Sd/-	31.8.92	

DEPT	BIE	SCALE	WEIGHT(KG.)	REF TO ASSY DRG	ITEM NO.	NO. OF ITEM
CODE	421	NTS	200(APPROX.)	0 538 01 01003		

TITLE
145KV O.I.P.
CONDENSER BUSHING

CARD CODE

DRAWING NO. BCE-3-1216 REV 02

SHEET NO. 01 NO. OF SHEETS 01