BHARAT HEAVY ELECTRICAL LIMITED

Enquiry No. :

UNIT'S ADDRESS:
HEEP, RANIPUR
HARIDWAR - 249403
UTTARANCHAL, INDIA

Due Date :

Supplier Qtn. No.:

Date :

CONTACT PERSON FROM PURCHASE DEPTT.:
NAME: MR. KAUSHIK ROY
DESIGNATION: SM (PPX-CAP)
PHONE NO.: 0091 - 1334 - 281187
E-MAIL: kroy@bhelhwr.co.in
FAX NO. : 0091 - 1334 - 226462

SPECIFICATION CUM COMPLIANCE CERTIFICATION FOR CNC VERTICAL BORER

NOTE :-

1. Vendor (OEM) must submit complete information against clause at Sl.No. 26.0 (Qualifying condition). The offer meeting this clause would only be processed (OEM : Original Equipment Manufacturer).
2. The vendor(OEM) should fill the "Offered" Column in compliance to specified requirements and also "Deviations" Column, where there is any deviation from the requirement. Duly filled specification cum compliance certificate should be submitted along with the offer. Inadequate, incomplete, ambiguous or unsustainable information against any of the clauses of the specifications/requirements shall be treated as non-compliance.
3. Wherever, reference of any document (enclosed with the offer) is given by vendor while confirming specified requirements. The reference should be complete & specific with Page No. & Sl. No./Clause No. of that enclosed document.
4. The offer and all documents enclosed with offer should be in English language only.
5. Complete offer (only Technical part) and all documents enclosed with offer should also be submitted in soft.

IMPORTANT: Vendor is required to quote prices for all specified technical requirements including requirements where "vendor to offer" has been mentioned under coloumn "Required" of Sepecification cum compliance certification. All subsequent clarifications w.r.t. specified requirements shall be without any financial implications.

ADDRESS OF THE SUPPLIER :

TELEPHONE NOS.:
FAX NOS.:
E-MAIL ADDRESS :

SCOPE:	SUPPLY, ERECTION & COMMISSIONING OF CNC VERTICAL BORER COMPLYING WITH SPECIFICATIONS AS BELOW.				
SL. NO.	**DESCRIPTION OF BHEL REQUIREMENT**	**REQUIRED**	**OFFERED**	**DEVIATION**	**REMARKS**
1.0	**PURPOSE & WORKPIECE MATERIAL**				
1.1	**Purpose:** This machine is required for carrying out rough & finish machining operations on casings and other components of Steam Turbines/Gas Turbines etc. demanding high accuracies & surface finish. The machine shall be used for all types of turning, grooving, boring operations on diameters & faces including threading operations.	Vendor to note & accept			
1.2	**Work Piece Material**: are forgings / castings of High Alloy Steels, Nimonic Steel, Stainless Steel, Inconel, Cast Iron and similar other materials which are generally used in power producing equipment having hardness 150 to 500 BHN.	Vendor to note & accept			
2.0	**SPECIFICATIONS**				
2.1	**MACHINE CONFIGURATION**				
2.1.1	**Double Column CNC Vertical Borer with single Ram**	Vendor to offer			
2.2	**CAPACITY & SIZE**				
2.2.1	Maximum Height for Turning & Facing	7000 mm or more			
2.2.2	Maximum Turning Diameter	9000 mm or more			
2.2.3	Maximum Work piece Weight	upto 200000 Kg			
2.2.4	Maximum Swing Diameter	9000 mm or more			
2.2.5	Minimum Boring Diameter (between Dia 600 to Dia 700mm) (using standard turning tool holder mounted on ram with cutting tool)	Vendor to inform			
2.3	**TABLE**				
2.3.1	Table Diameter	8000 mm			
2.3.2	Load Capacity	200000Kg or more			
2.3.3	Table Speed (Infinitely Variable)	Min. 1rpm or less, Max. 40rpm or more			

SL. NO.	DESCRIPTION OF BHEL REQUIREMENT	REQUIRED	OFFERED	DEVIATION	REMARKS
2.3.3.1	Speed Ranges	Vendor to inform			
2.3.4	Power of Main Drive(s) (S1 - Continuous Rating) AC	200 kw or more			
2.3.5	Details of Main Drive viz.Type, Make, Model etc.	Vendor to inform			
2.3.6	No. of Jaws/Vices (With Force Multiplier Mechanism)	8			
2.3.7	Maximum External Clamping Diameter (keeping complete vices/jaw boxes within table diameter).	6500mm or more			
2.3.8	Minimum External Clamping Diameter	Vendor to inform			
2.3.9	Maximum Internal Clamping Diameter	Vendor to inform			
2.3.10	Minimum Internal Clamping Diameter	Vendor to inform			
2.3.11	Clamping Force of each Jaw.	Vendor to inform			
2.3.12	Positions and Dimensions of the Jaws on Table. Chucking Capacity Diagram should be submitted.	Vendor to inform & submit			
2.3.13	Type of Force Multiplier Mechanism used in Jaws should be explained and Drwaings to be submitted. Suitable Torque Wrench to be supplied.	Vendor to inform & submit			
2.3.14	Maximum permissible Cutting Force	Vendor to inform			
2.3.15	Maximum permissible Torque	Vendor to inform			
2.3.16	RPM at which Max. Torque is available.	Vendor to inform			
2.3.17	Table Torque - Speed diagram	Vendor to submit			
2.3.18	Type of Bearing for the Table : Hydrostatic (should be confirmed by Vendor) . Table's Hydrostatic Bearing diameter 5000mm or more. In case of two sets of bearing, one set should have diameter of 5000mm or more. Complete details like bearing diameters, sizes of pockets etc. should be furnished.	Vendor to inform			
2.3.19	Size of T - slots, their position and accuracy. Drawing of Table showing details of the T - slots etc. should be submitted.	Vendor to submit			

SL. NO.	DESCRIPTION OF BHEL REQUIREMENT	REQUIRED	OFFERED	DEVIATION	REMARKS
2.3.21	Table Loading Diagram should be submitted (Load v / s Distance from Table Center) for uniform as well as for eccentric loading. The Table should be suitable for loading of component (*like Casings as per attached sketch/drawing "Sketch_01", "Sketch_02","Sketch_03" & "Sketch_04"*) which has eccentric/ non-uniform loading along with requisite clamping elements).	Vendor to note and submit			
2.3.22	Diameter, Depth and Accuracy of Center Bore on Table Top Surface.	Vendor to inform			
2.3.23	Construction of machine table (Table's cross-section & construction details to be submitted): A) Part of Table Top (face plate) should be of single piece construction for at least 5m of diameter. B) Table should be of rigid construction to take care of atleast 100 tons of peripheral loading (non-uniformly distributed at 2 to 4 points) within diameter range of 5800-6500mm. Vendor may be required to demonstrate successful capability of this loading at BHEL's works after erection of machine, by loading suitable work piece (to be provided by BHEL) i.e. same or similar to the proveout component.	Vendor to confirm & submit			
2.3.24	Height of machine table top - with ref. to shop floor	Vendor to inform			
2.3.25	Provision to stop & position table precisely at any required angular position for setting & alignment of job, clamped on machine table, having only 2-4 milling points as initial reference, to carry out boring operation on the machine. Details to be submitted.	Vendor to confirm & submit			
2.4	**CROSS RAIL**				
2.4.1	Vertical Travel.	Vendor to inform			
2.4.2	Vertical Traverse Rate.	Vendor to inform			
2.4.3	Crossrail movement : Full CNC Programmable Continuous Axis for its vertical movement/ traverse. Details to be informed.	Vendor to offer			
2.4.7	Maximum Height of Cross Rail bottom from Table Top	Vendor to inform			

SL. NO.	DESCRIPTION OF BHEL REQUIREMENT	REQUIRED	OFFERED	DEVIATION	REMARKS
2.4.8	Minimum Height of Cross Rail bottom from Table Top	Vendor to inform			
2.4.9	Movement of Cross Rail : Through NC Program as well as manually by Push Buttons/Keys	Vendor to offer			
2.4.10	Machine Reference Point should be at Ram Reference Point and it should be updated automatically with movement of Cross Rail	Vendor to offer			
2.4.11	Details of crossrail movement/positioning/locking mechanism	Vendor to submit			
2.5	**TOOL HEAD and RAM**				
2.5.1	No. of Columns	2			
2.5.2	No. of Rams	1			
2.5.3	Cross - Section of Ram, to suit requirement at Sl. No. 2.2.5	Vendor to inform			
2.5.3.1	Ram & its supporting/guiding mechanism should be ***rigid enough*** for troublefree machining (turning & grooving) with maximum projection of ram.***Provisions incorporated for the same are to be informed*** .	Vendor to confirm & inform			
2.5.4	Provision for Thread Cutting (Maximum pitch limitation, if any)	Vendor to inform			
2.5.5	Clamping / Mounting Mechanism of Turning Tool Holders/Attachments on ram.	Vendor to submit			
2.5.6	Clamping Force Available for clamping of Turning Tool Holders/Attachments.	Vendor to inform			
2.5.7	Mounting of Turning Tool Holders and Attachments should be automatic through Program as well as manually through push buttons.	Vendor to confirm			
2.6	**MAIN TRAVERSES**				
2.6.1	Vertical Travel of Ram (Z-Axis)	4000mm or more			
2.6.2	Horizontal Travel of Ram (+ve X-Axis)	Vendor to inform			
2.6.3	Horizontal Travel of Ram beyond Center of the Table (-ve X-Axis) : Minimum1000mm	Vendor to inform			
2.6.4	Maximum Distance between Table Top and Standard Turning Tool Holder with Tool.	Vendor to inform			

SL. NO.	DESCRIPTION OF BHEL REQUIREMENT	REQUIRED	OFFERED	DEVIATION	REMARKS
2.6.5	Minimum Distance between Table Top and Standard Turning Tool Holder with Tool.	Vendor to inform			
2.7	**MACHINE GUIDEWAYS**				
2.7.1	Width of Cross Rail guideways	Vendor to inform			
2.7.2	Width of column guideways	Vendor to inform			
2.7.3	X & Z guide ways should be fully hydrostatic (Details should be submitted)	Vendor to confirm			
2.7.4	Hardness of guideways	Vendor to inform			
2.7.5	**Metallic Telescopic Covers:** Waterproof Telescopic Covers of rust resistant steel should be provided with pads/wipers on both left and right sides of tool head on the crossrail and also above & below the crossrail on both columns covering the guide ways. Joints of telescopic covers should be sealed **to avoid seepage of coolant on the guideways** . Bellow type Covers to be provided under the Metallic Telescopic Covers. The movement of telescopic covers should be troublefree and requiring minimum maintenance.	Vendor to offer			
2.7.6	Protection is to be provided in telescopic covers, table bearing and guidways to avoid mixing of cast iron dust (dust generated due to machining of nodular cast iron component) into Hydrostatic/Hydraulic Oil including table bearing. Details of provisions to be submitted.	Vendor to submit			
2.8	**FEEDS AND DRIVE SYSTEM**				
2.8.1	Cutting feed in X & Z Axes (Infinitely Variable)	0- 10000mm/min or more			
2.8.2	Rapid feed in X & Z Axes	0- 10000mm/min or more			
2.8.3	Feed drives/motors X & Z axes [AC servo motors] of Siemens or Fanuc digital type (detail of model, make, type, rating etc. should be submitted)	Vendor to offer			
2.8.4	Maximum cutting force permissible on Ram & at what extension	Vendor to inform			
2.8.5	Maximum permissible Cutting Force at Maximum Ram extension	Vendor to inform			

SL. NO.	DESCRIPTION OF BHEL REQUIREMENT	REQUIRED	OFFERED	DEVIATION	REMARKS
2.8.6	Permissible Cutting Force v / s Ram Projection - Diagram should be submitted.	Vendor to submit			
2.8.7	Feed back system for X & Z axes should be Heidenhain linear scales with pressurised compressed air cleaning (Details should be submitted)	Vendor to offer			
2.8.8	Details of backlash free movement mechanism in X & Z axes should be submitted.	Vendor to submit			
2.8.9	Mechanism for locking X & Z axis	Vendor to inform			
2.9	**CONSTRUCTION**				
2.9.1	Vendor to furnish details of material, hardness & constructional details, including explanatory drawings/ photographs/ literatures, of various components/ assemblies like Column, Cross Rail, Ram head, Table, Guideways/slides, Feed Transmission system, Ram, Hydraulic and Lubrication system, Feedback system etc .of the machine.	Vendor to submit			
2.10	**OPERATOR'S PLATFORM**				
2.10.1	It should be independent motorised type, movable / adjustable in vertical and horizontal directions. It should be able to reach almost to center of the Table in horizontal direction. Interlocks should be provided for its horizontal / downward movement against rotating Table and against the job (rotating or stationary) to avoid collision / accident. Positions of the gates provided in the platform for Operator's convenience should be informed by the vendor. A 15 Amp. Plug Point with ON/ OFF switch is also to be provided on the Platform. Suitable ladder is to be provided with the column of platform. A board for display of A0 size drawing with proper light is to be provided.	Vendor to inform and offer			
2.10.2	Horizontal movement of complete Platform.	Vendor to inform			
2.10.3	Vertical movement of complete Platform to cover total turning height.	Vendor to inform			
2.10.4	Height of Platform Railing.	Vendor to inform			
2.10.5	Weight Carrying Capacity of the Platform should be min 300Kg	Vendor to inform			

SL. NO.	DESCRIPTION OF BHEL REQUIREMENT	REQUIRED	OFFERED	DEVIATION	REMARKS
2.10.6	Minimum Position of Platform from Shop Floor.	Vendor to inform			
2.11	**OPERATION AND CONTROL SYSTEM**				
2.11.1	**OPERATOR'S PANEL :** Swiveling type operator's panel having complete CNC and machine control system with all displays of required configuration shall be provided and suitably located on operator's platform for convenient, efficient & safe operation of the machine. All switches & keys (with suitable interlock with table rotation) & display should be within reach of operator of average height (5' 5") for easy & safe operation. All displays/indications should also be conveniently placed accordingly. Layout showing complete details should be submitted. A protection cover made of steel sheet or equivalent should be provided above the operator's panel.	Vendor to offer and submit details			
2.11.2	**CNC SYSTEM & FEATURES**				
2.11.2.1	Make : Fanuc / Siemens.	Siemens or Fanuc			
2.11.2.2	Type : PC based latest version	PC based latest version			
2.11.2.3	Model (Latest version, as available at the time of ordering, should be supplied).	Vendor to inform and submit details			
2.11.2.4	Details of optional features, recommended by vendor.	Vendor to inform & offer			

SL. NO.	DESCRIPTION OF BHEL REQUIREMENT	REQUIRED	OFFERED	DEVIATION	REMARKS
2.11.2.5	The system should have full alphanumeric keyboard, TFT colour display (15" or more), additional draw-out type Qwerty Key Board and optical mouse in suitable enclosure, RS232C serial interfaces, parallel interface for printer, COM port for telediagnostics, network ready with LAN, hard disk of sufficient capacity (Largest size available at the time of order shall be supplied), graphic simulation, servo wave forms display etc. and other required and necessary software should be preinstalled on the system.(Details should be submitted by Vendor) The CNC System shall also have Electronic hand wheels selectable for X & Z axes and Table rotation, USB Port with Pen drive for data input/output, In case, only USB ports (separate port for each of above function - total min. 4 USB ports) are provided, suitable hardware/connectors shall be provided to ensure above functionalities	Vendor to offer and submit details			
2.11.2.6	Provision for automatic safe shut down of CNC System in case of Power Failure.	Vendor to offer			
2.11.2.7	Loading of PLC software (S7 of Siemens or equivalent) on hard disk & provision of ON screen PLC ladder display.	Vendor to offer			
2.11.3	**HAND HELD UNIT:**				
2.11.3.1	Hand Held unit (auxiliary pendant) Type B-MPI of Siemens make or equivalent, with jog axes/spindle inching/ hand-wheel and sufficient length of interfacing cable), which can be taken near to the table for job setting and similar other purposes.	Vendor to offer			
2.11.4	**MANUAL CONTROL**				
2.11.4.1	Complete manual control of machine with required switches / keys should be provided on operator's panel for selection of required axis, axis direction, cutting feed, table rpm, cutting feed on/off, display of axis position values etc, for manual machining operations without using CNC program / CNC option MANUAL TURN (of Siemens control or equivalent from Fanuc control) / MDI mode. Diagram / Sketches for switches / keys provided on operators pendant should be submitted.	Vendor to offer and submit details			

SL. NO.	DESCRIPTION OF BHEL REQUIREMENT	REQUIRED	OFFERED	DEVIATION	REMARKS
2.12	**UPS FOR CNC SYSTEM**				
2.12.1	UPS unit (similar to Siemens UPS module/feature SITOP) with rechargeable battery of sufficient time and having provision for **unattended automatic shutdown** feature for Windows operating system & also to suit feature for **automatic retraction of tool during threading** in case of power failure or Table/Feed stoppage due to any alarm generation to avoid damage to job/tool.	Vendor to offer			
2.13	**MACHINE LIGHTS**				
2.13.1	Machine Lights for sufficient illumination of complete working area on the table, on the ram housing to view tool inside long casing type jobs and also on/near to operator's panel & area below crossrail should be provided for clear visibility.	Vendor to offer			
2.13.2	A magnetic base portable spot light with sufficiently long cable should also be provided.	Vendor to offer			
2.13.3	Lights required in the foundation/ pit area shall also be foreseen and supplied by the vendor.	Vendor to offer			
2.13.4	All light fittings, consumables, adapters/receptacles should have compatibility with Indian equivalents	Vendor to offer			
2.13.5	Flashing/Rotary type light indicating end of cutting, program stop, alarm etc. at a easily visible &suitable place.	Vendor to offer			
2.14	**AIR CONDITIONERS**				
2.14.1	Door/ side mounted Air Conditioners of make Rittal/ Pfannenberg/ Schimpke-Hann/ Kelvin/ Werner Finley/ Eata/ Chilton/Advance Cooling System or other reputed make with Dehumidifiers of suitable/ sufficient capacity and proper drainage pipes for condensate, are to be provided for all Electrical/ Electronic Panels/ Cabinets including operator's Panel (if provided by CNC System Manufacturer) considering specified ambient conditions. The Air Conditioners are to be preferably mounted on doors of panels and not on top of the panels. Details regarding make etc to be submitted.	Vendor to offer and submit details			
2.14.2	Chiller Units of make Rittal/ Pfannenberg/ Schimpke-Hann/ Kelvin/ Werner Finley/ Eata/Chilton/ Advance Cooling System or other reputed make of suitable/sufficient capacity are to be provided, if required, for cooling of different type of oils and coolants considering Ambient Operating Conditions specified at Sl No. 21.3.	Vendor to offer and submit details			

SL. NO.	DESCRIPTION OF BHEL REQUIREMENT	REQUIRED	OFFERED	DEVIATION	REMARKS
2.14.3	In case of order, Vendor to supply the following information about Air Conditioners and Chiller Unit(s) used in the machine: Type Refrigeration/ Chiller unit (refrigerant conforming to environment norms). Capacity of the chiller unit. Type of compressor with complete specifications. Type of Thermostatic Expansion Valve with complete specifications. Fan size and flow in CFM (cubic feet meter) of the Condenser unit. Specifications of the Evaporator Unit (Width Plate type/ Coil type) Functional requirement of temperature of Cooling Oil to be maintained between range T1 to T2. Type of temperature indicator/ controller used in the chiller unit with complete specifications.	Vendor to confirm			
2.15	**HYDRAULIC SYSTEM** (Details should be Submitted by the Vendor)	Vendor to submit.			
2.15.1	The Hydraulic System shall be of Re-circulating Type. Hydraulic Tank should be preferably placed at shop floor.	Vendor to offer and confirm			
2.15.2	Pumps, Valves, Switches (Pressure & Flow) should be of Make : Rexroth / Parker / Hawe/ Vickers / Vickers Sperry.	Vendor to offer and confirm			
2.15.3	Filtration System: Sufficient no. of filters (with electric clogging indicator and alarm on PLC) should be used to avoid frequent clogging of the filters and other maintenance related problems. Filter elements should, preferably, be of Make : EPE / Hydac/ Mahle/ Purolator.	Vendor to offer and confirm			
2.15.4	Failure indication	Vendor to offer			
2.15.5	Automatic shut off provision, Details should be submitted.	Vendor to offer			
2.15.6	Refrigerated type cooling and electric heating (Electric heating, only if required) system of sufficient capacity to maintain complete Hydraulic System, including lubrication oil, hydrostatic oil and gearbox oil, etc. keeping in view the specified ambient conditions to be offered with complete details. The temperature of Hydraulic Oil should not go beyond 40 deg. C.	Vendor to offer & submit			
2.15.7	Hydraulic pump capacity (flow / pressure)	Vendor to inform			
2.15.8	Each pump should have an independent motor. Tandem pumps should not be used	Vendor to confirm & offer			

SL. NO.	DESCRIPTION OF BHEL REQUIREMENT	REQUIRED	OFFERED	DEVIATION	REMARKS
2.16	**FIRST FILLING OF OILS**				
2.16.1	First filling of all required Oils & Grease etc. for the machine, voltage stabilizer, isolation transformer & air-compressor including coolant for test piece & proveout machining etc.to be supplied by vendor. Indigenous (Indian) source or Indian equivalent and specifications of oils/ greases are also to be provided by the vendor.	Vendor to offer & submit			
2.17	**COOLANT SYSTEM**				
2.17.1	Coolant System with all accessories for following variants shall be provided. Selection of all the variants shall be through program and push buttons as well.	Vendor to offer			
	a) Recirculating Type Flood Coolant System	Vendor to offer			
	b) Air coolant system (only pressurised air)	Vendor to offer			
2.17.2	All attachments, tool holders, boring bars, cassettes, adapters etc. shall have the provision so that coolant is available directly at the tool-cutting tip.	Vendor to offer			
2.17.3	Coolant collection and recirculation system should be leak proof & perfect to avoid any spillage on shop floor, trenches for cables & foundation pit of the machine etc. In case, any leakage is found, it shall be corrected by vendor.	Vendor to offer & confirm			
2.17.4	**Coolant Filtration System:** Recirculating type coolant system with Vacuum Rotary drum type Coolant Filtration System and magnetic separator. The filtration system should be mounted at shop floor level, if possible with provision to avoid leakage/spillage of coolant.	Vendor to confirm and submit details.			
2.17.5	Coolant Flow Diagram showing filters, pumps, valves, tanks etc.	Vendor to submit			
2.17.6	Coolant pumps & motor details etc. for all types of coolant variants	Vendor to inform			
2.17.7	Coolant Tank Capacity	Vendor to inform			
2.17.8	Pressure & rate of flow of coolant for different variants should be furnished in the offer. The coolant should be able to reach tool tip at full pressure.	Vendor to inform			
2.17.9	All types of coolant variants should be switchable through program as well as manually by push buttons provided on the Operator's control panel.	Vendor to offer			
2.17.10	For finer control of Pressure and Coolant Flow Rate, after its activation through program or switches, Rotary/ potentiometer switches shall be provided on the Operator’s Panel.	Vendor to offer			

SL. NO.	DESCRIPTION OF BHEL REQUIREMENT	REQUIRED	OFFERED	DEVIATION	REMARKS
2.17.11	The coolant tank should be fitted with skimmer for regular cleaning of coolant from contamination with tramp oil.	Vendor to offer			
2.18	**REQUIREMENT FOR ELECTRICAL EQUIPMENT**				
2.18.1	415V (fluctuation ±10%), 50HZ (fluctuation ±3%), 3 Phase AC (3 wire system with out neutral) Power Supply Voltage will be provided by BHEL at a single point near the machine, as per layout recommended by Vendor. All types of switches, cables, connections, circuit breakers etc. required for connecting BHEL's power supply point to different parts of the machine/control cabinets including Voltage Stabilizer, Isolation Transformer & Air Compressor etc. , shall be supplied by the vendor & shall be the responsibility of vendor. Requirement of grounding/earthing with required material details is to be informed by vendor well in advance so that same could be incorporated during construction of foundation.	Vendor to accept & offer			
2.18.2	**Tropicalisation:** All electrical / electronic equipment shall be tropicalized.	Vendor to offer			
2.18.3	All electrical & electronic control cabinets & panels should be dust and vermin proof.	Vendor to offer			
2.18.4	All electrical components in the cabinets should be mounted on DIN Rail.	Vendor to offer			
2.18.5	All electrical / electronic panels to be provided with adequate door locks. All electrical & electronic panels including operator's panel should have sufficient illumination and power receptacles/plug points of 220Volts, 5/15 Amp AC with on/off switch. All electrical adapters/receptacles, fittings, consumables etc. should be Indian or should have compatibility with Indian equivalents.	Vendor to offer			
2.18.6	All motors shall conform to IEC or Indian Standards	Vendor to offer			
2.18.7	All cables moving with traversing axes should be installed in caterpillar / Drag chain. Additionally, all the cable trays required for laying of cables should be included in the offer.	Vendor to offer			
2.18.8	Vendor should ensure the proper earthing for the machine and its peripherals/accessories. Any material requirement for the same should be informed with foundation design/drawings. The vendor can take earthing connection from the nearest column of the production shop.	Vendor to offer			
2.19	**SAFETY ARRANGEMENTS** Following safety features in addition to other standard safety features should be provided on the machine:	Vendor to offer			

SL. NO.	DESCRIPTION OF BHEL REQUIREMENT	REQUIRED	OFFERED	DEVIATION	REMARKS
2.19.1	Machine should have adequate and reliable safety interlocks / devices to avoid damage to the machine, work piece and the operator due to the malfunctioning or mistakes. Machine functions should be continuously monitored and alarm / warning indications through lights/ alarm number with messages (on CNC display and panels) should be available.	Vendor to offer			
2.19.2	A detailed list of all alarms / indications provided on machine should be submitted by the supplier.	Vendor to submit			
2.19.3	All the pipes, cables etc. on the machine should be well supported and protected. These should not create any hindrance to machine operator's movement for effective use of machine.	Vendor to confirm			
2.19.4	All the rotating parts used on machine should be statically & dynamically balanced to avoid undue vibrations & noise.	Vendor to confirm			
2.19.5	Emergency Switches at suitable locations as per International Norms should be provided.	Vendor to confirm			
2.19.6	Oil & water pipe lines should not run with electrical cable in the same tray/trench.	Vendor to confirm			
2.20	**ENVIRONMENTAL PERFORMANCE OF THE MACHINE :** The Machine should conform to following factors related to environment :	Vendor to offer			
2.20.1	Maximum noise level shall be 85 dB(A) at normal load condition, 1 meter away from the machine with correction factor for back ground noise, if necessary. This will be measured as per international standards like DIN 45635-16, if required. Supplier to demonstrate compliance to noise level, if so required.	Vendor to confirm			
2.20.2	There shall not be any emissions from the machine except fumes of cutting fluid during machining.	Vendor to confirm			
2.20.3	There should not be any effluent from the machine. In case there are any effluents from the machine, requisite effluent treatment plant or pollution control device should be built into the machine by the supplier.	Vendor to confirm			
2.20.4	No hazardous chemicals shall be required to be used in the machine.	Vendor to confirm			
2.20.5	If any safety / environmental protection enclosure is required it should be built in the machine by the vendor.	Vendor to confirm			

SL. NO.	DESCRIPTION OF BHEL REQUIREMENT	REQUIRED	OFFERED	DEVIATION	REMARKS
2.20.6	Paint of the machine should be oil / coolant resistant and should not get peeled off and mixed up with coolant.	Vendor to confirm			
2.21	**In-cycle hour counter** with reset facility for counting table running time, in-feed motion of ram, machine idle time, machine under maintenance time etc. and display the counted data on CNC display on video pages created by vendor.	Vendor to offer			
3.0	**CHIP CONVEYOR**				
3.1	An elevating type chip conveyor to carry both short and curly chips efficiently and effectively to the chip bin on shop floor (on either side of the machine) should be provided at appropriate location. Metallic chutes should be provided all around the table for smooth collection of chips upto opening of chip conveyor.	Vendor to offer			
3.2	Type of chip conveyor	Hinged type or superior			
3.3	Width of conveyor	Vendor to inform			
3.4	Elevation of chip conveyor for chip bin	Vendor to inform			
3.5	Material of chip conveyor (should be rust resistant)	Vendor to inform			
3.6	Provision for smooth collection of chips from all-around table to the conveyor and for avoiding clogging of chips should be provided. Removable Grill/Mesh type rigid covers should be provided above some portion of the chip conveyor, to enable machine operator's access to chip conveyor from shop floor for disposal of scattered chips on shop floor, if any, through chip conveyor. Details for the same should be submitted by vendor.	Vendor to offer			
3.7	Operation of chip conveyor (forward & reverse) should be possible through push buttons on operator's panel and also near chips disposal point/chip bin on the chip conveyor.	Vendor to offer			
3.8	Layout showing location of chip conveyor should be submitted.	Vendor to submit			
3.9	**CHIP BINS (two nos.)** of appropriate size, with wheels, lifting hooks & handle for movement.	Vendor to offer			

SL. NO.	DESCRIPTION OF BHEL REQUIREMENT	REQUIRED	OFFERED	DEVIATION	REMARKS
4.0	**SERVO VOLTAGE STABILIZER**				
4.1	Oil / Air Cooled Servo Controlled Voltage Stabilizer (of reputed Indian make) suitable for complete machine, its drives, controls, PLC etc. for unbalanced load & supply conditions considering specified power supply & ambient conditions.	Vendor to offer with details			
4.2	Make	NEEL / Aplab / Auto Electric / Servomax			
4.3	Model, Rating & Input/Output Voltage etc.	Vendor to inform			
4.4	Monitoring device with cutoff facility for under/over output voltage, Devices for load current measurement, MCCB at input for overload/short circuit protection.	Vendor to offer			
5.0	**ULTRA ISOLATION TRANSFORMER**				
5.1	Ultra Isolation Transformer (of reputed Indian make) suitable for complete machine , its drives, controls, PLC etc. for unbalanced load & supply conditions considering specified power supply & ambient conditions.	Vendor to offer			
5.2	Make	NEEL or Aplab or Auto Electric or Servomax			
5.3	Model, Rating & Input/Output Voltage etc.	Vendor to inform			
5.4	Monitoring device with cutoff facility for under/over output voltage, Devices for load current measurement, MCCB at input for overload/short circuit protection.	Vendor to offer			
6.0	**PNEUMATIC SYSTEM**				
6.1	**AIR COMPRESSOR**				
6.1.1	Independent Air/Oil cooled, Screw Type Air Compressor (make Elgi , Ingersol Rand or of other reputed Indian make) with refrigerated type Dryer & Filter of suitable/sufficient capacity with all required accessories for the total compressed air requirements of the machine & accessories and to suit required air quality should be supplied. The system should be so designed to have additional provision and required accessories so that BHEL compressed air supply (having pressure 5-6 bar with little moisture/dirt content) could be used as and when required. The compressor unit should be suitable for continuous duty considering specified power supply & ambient conditions..	Vendor to offer			

SL. NO.	DESCRIPTION OF BHEL REQUIREMENT	REQUIRED	OFFERED	DEVIATION	REMARKS
6.1.2	Capacity (Discharge Air Flow & Pressure, Motor Power etc.)	Vendor to inform			
6.1.3	Refrigerant used	Vendor to inform			
6.1.4	Output Air Quality (Pressure Dew Point in degree Celsius, Residual mist/oil content in ppm etc.). It should be odor-free.	Vendor to inform			
6.1.5	Noise level (Maximum 85dB)	Vendor to inform			
6.1.6	Flow diagram	Vendor to submit			
6.2	**COMPRESSED AIR POINTS**				
6.2.1	Compressed Air Point with connections for Air Coolant System mentioned at Sl. No. 2.17.1	Vendor to offer			
6.2.2	Suitably located Compressed Air Point near machine table with manually operated ON/ OFF Valve and flexible pipe of suitable length with air gun for cleaning of work piece, tools and work area etc.	Vendor to offer			
7.0	**TOOLINGS :** ***** Individual package prices against each Sl.No. shall be quoted by Vendor.	Vendor to confirm			
7.1	**TOOL HOLDERS** All tool holders & boring bars shall be available on ATC for direct clamping in ram through ATC cycle. All tool holders & boring bars should have holes for lifting by suitable eye-bolts. Each tool holder/boring bar is to be offered complete with clamping screws, eye-bolt for lifting and packing plate (for clamping of 32x32mm shank tool instead of 40*40mm tool), as applicable. Final drawings for offered items shall be submitted by vendor to BHEL after PO, in case of order, for BHEL's approval prior to their manufacturing & supply. **Quantity : One** no. of each type (Sl No 7.1.1 to 7.1.8) and **Two** nos. of Special Type Holder (Sl. No 7.1.9), complete in all respects	Vendor to offer and submit			
7.1.1	Tool holder for external turning having provision for rigid cassette type clamping.	Vendor to offer			
7.1.2	Tool holder for internal turning having provision for rigid cassette type clamping.	Vendor to offer			
7.1.3	Tool holder, having provision for both Left Hand (LH) and Right Hand (RH) facing using rigid cassette type clamping.	Vendor to offer			
7.1.4	Standard (Conventional) tool holder for 40*40mm tool shank with direct clamping of tools for internal / external turning and LH/RH facing operations with provision for clamping 32*32mm shank tools with packing pieces.	Vendor to offer			
7.1.5	Eccentric Boring Bar dia. 400 boring bar with length. 800mm with conventional type of tool holding for 40*40mm shank tools and with provision of 32*32mm shank tool both for turning and facing positions.	Vendor to offer			

SL. NO.	DESCRIPTION OF BHEL REQUIREMENT	REQUIRED	OFFERED	DEVIATION	REMARKS
7.1.6	Centric Boring Bar dia. 300 boring bar with length. 500mm with conventional type of tool holding for 40*40mm shank tools and with provision of 32*32mm shank tool both for turning and facing positions..	Vendor to offer			
7.1.7	Centric Boring Bar dia. 400 boring bar with length. 1200mm with conventional type of tool holding for 40*40mm shank tools and with provision of 32*32mm shank tool both for turning and facing positions..	Vendor to offer			
7.1.8	General adapter for turning with flange type clamping or equivalent so that special tool holders manufactured by BHEL could be clamped for use in future.	Vendor to offer			
7.1.9	Special Holder with provision to clamp tools having Capto-C8/KM80 type coupling. This holder shall be clamped in tool holder at Sl No. 7.1.4 to 7.1.7. Sketch 'Special_Holder' for reference is enclosed. For ensuring rigidity for trouble free machining, vendor may offer alternate solution for use of tools with Capto-C8/KM80/ equivalent standard coupling (to be agreed with BHEL) on machine.	Vendor to offer			
7.2	**PRESETTABLE CASSETTES (to suite above cassette type holders)** are to be offered as per Drg. No. R6300-0965 (for RH Cassette). Each cassette is to be offered complete with clamping screws and packing plate (for clamping of 32x32mm shank tool instead of 40*40mm tool), as applicable. Final drawings for offered items shall be submitted by vendor to BHEL after PO, in case of order, for BHEL's approval prior to their manufacturing & supply. **Quantity : Two no. of each type(Sl No 7.2.1 to 7.2.4), complete in all respects.** (LH - Left Hand / RH - Right Hand)	Vendor to offer			
7.2.1	LH cassette for 40*40mm tool shank, Length approx. 230 mm, with provision for clamping 32*32mm shank tools also with packing pieces.	Vendor to offer			
7.2.2	RH cassette for 40*40mm tool shank, Length approx. 230 mm, with provision for clamping 32*32mm shank tools also with packing pieces.	Vendor to offer			
7.2.3	LH long cassette for 40*40mm tool shank, Length approx. 430 mm, with provision for clamping 32*32mm shank tools also with packing pieces.	Vendor to offer			
7.2.4	RH long cassette for 40*40mm tool shank, Length approx. 430 mm, with provision for clamping 32*32mm shank tools also with packing pieces.	Vendor to offer			

SL. NO.	DESCRIPTION OF BHEL REQUIREMENT	REQUIRED	OFFERED	DEVIATION	REMARKS
7.3	**TOOLING FOR MACHINING OF PROVE-OUT COMPONENT** Vendor to submit tooling package related to prove-out machining in two sets **(SET-1 & SET-2)**. Vendor shall submit preliminary list of items with offer and should quote a separate price for each set (SET-1 & SET-2) against this clause. Final list of offered items for each set shall be submitted by vendor within two months or mutually agreed period after PO, in case of order, with no price implication.	Vendor to offer			
7.3.1	**<u>SET-1</u>** **(Tools for machining of prove-out component as per Sl. No. 16.2) as per following details :** (a) The SET-1 tooling package shall be to suit requiremnt as specified below at Sl.No. 7.3.1.1 & 7.3.1.2. (b) The prove-out machining shall be done using Tool Holders, consumables (inserts, shims, cartridges, screws etc) supplied in SET-1 . (c) In case of any addition/ change in supplied items in SET-1, required for successful prove-out machining, the same shall be replenished/ supplied by vendor without any finacial implication to BHEL in minimum possible time. (d) In case of damage to any item other than consumables i.e. cassettes, cutting tools, holders, etc. during prove-out machining due to wrong machining strategy/ tool selection / cutting parameters etc., the same shall be replaced by the vendor without any financial implications to BHEL. (e) Any consumable items left after prove-out machining shall remain part of SET-1 supply and shall not be adjusted/considered for SET-2 supply. ***** Seperate package price to be quoted.	Vendor to confirm			
7.3.1.1	All types of cassettes, tools, inserts, holders, special measuring instruments (if required) etc. in sufficient quantity, as recommended & required by vendor for carrying out all types of turning, grooving, boring operations for complete machining of proveout component as per its drawing to meet required drawing accuracy & surface finish. The package should include all types of cassettes required for proveout machining in addition to cassettes offered at Sl.Nos. 7.2.1 to 7.2.4. Tool holders & boring bars offered at Sl.Nos. 7.1.1 to 7.1.7 need not to be offered here again, if required to be used. In case, any other type of tool holders, different from tool holders at Sl.Nos. 7.1.1. to 7.1.7 are required to be used, same should be included in package offered here.	Vendor to offer			
7.3.1.2	Complete fixture & set of required clamping elements & fasteners, in sufficient quantity, with setting scheme as recommended & required by vendor for clamping/setting of component on machine table in different setups and for carrying out complete machining of proveout component as per Sl.No. 16.2. This shall include ladders, platform etc. required by machine operator to go up on the high jobs like proveout component and enter inside job for checking/measurement/cleaning etc.	Vendor to offer			

SL. NO.	DESCRIPTION OF BHEL REQUIREMENT	REQUIRED	OFFERED	DEVIATION	REMARKS
7.3.2	**SET-2** All consumables established during prove-out machining, as per below, shall be supplied with the machine : - Tools of each type : 2 Nos. for each item. - Inserts of each type : **50 Nos.** for each item. - Spares like shims , cartridges, screws, clamp etc : **10 Nos**. of each type. - Screw Drivers, Torque Wrench, Wrench etc. of each type : **2 Nos**. of each item ***** Seperate package price to be quoted.	Vendor to offer			
7.4	**Set of Extension Blocks for Jaw-boxes/vices** : Complete set of following items for clamping of different Jobs at height on the machine table: **a)** Four Nos. of Extension Blocks of height 1200mm (matching with offered Jaw-Boxes/Vices) **b)** Four Nos. of Extension Blocks of height 600mm (matching with offered Jaw-Boxes/Vices) The set should be complete in all respects with all required fasteners with matching Torque Wrench. The extension blocks shall be directly clamped on machine table using T-slots provided for vices/jaws and the vices/jaws shall be clamped on the top faces of these extension blocks which shall have matching T-slots. These blocks are independent of tooling packages offered by vendor for proveout machining.	Vendor to offer			
7.5	**OTHER TOOLING REQUIREMENTS**				
7.5.1	Mounting details of each type of toolings.	Vendor to submit			
7.5.2	Offered tooling system to be **rigid to carryout machining without undue vibration**, which can effect job accuracy and surface finish in extreme machining conditions like max. overhang of ram etc. .	**Vendor to confirm**			
7.5.3	In case of order, manufacturing drgs., catalogues & source of all tooling items (Tool Holders, Cassettes, Extension Blocks etc.) should be submitted by vendor.	Vendor to confirm			

SL. NO.	DESCRIPTION OF BHEL REQUIREMENT	REQUIRED	OFFERED	DEVIATION	REMARKS
7.5.4	Supplier should offer all tools & inserts with latest cutting geometries & grades to achieve high productivity and cutting parameters. Tools with indexable carbide inserts should only be offered. No brazed, HSS or form tool should be offered.	Vendor to confirm			
7.5.5	All supplied tool holders, boring bars, cassettes etc. shall have built in system for the coolant so that coolant is available directly on the cutting tip during all possible operations like grooving, turning etc. Provision for external coolant should also be provided.	Vendor to offer			
7.6	**Tool Storage Cabinets** (set of four nos.) of reputed (Indian) make having covered heavy duty drawers of suitable sizes with lock facility to store offered tooling items etc.	Vendor to offer			
8.0	**DIAGNOSTIC SYSTEMS**				
8.1	**TELE-DIAGNOSTIC SERVICE**				
	Tele-diagnostic service should be provided through Internet or ISDN along with required Hardware / Software package for the supplied CNC system for remote diagnosis and correction of the problems in both CNC System and PLC of the machine. This should be provided free of charge for the guarantee period. Help guide should be provided for use of the system/service. Terms and conditions for the service after guarantee period should be informed by vendor.	Vendor to offer			
8.2	**FAULT DIAGNOSTIC SYSTEM :**				
8.2.1	Supplier's own diagnostic system with required Software and Hardware installed on the CNC system, which shows detailed cause and remedy for the fault on the CNC system display with full **video/pictorial** diagnostics indicating the element /device causing the fault.	Vendor to offer			
8.2.2	Provision of OEM Screen with soft keys enabling the service personnel to bring back the ATC to its initial/nearest position in case of interruption of positioning cycle of ATC due to alarm on the machine or power failure. With this OEM screen, service personnel should be able to perform individual steps of positioning cycle of ATC, manually. Separate Pendent should also be provided to retrieve the ATC to it's initial position. Similarly, provision shall also be there to bring back the crossrail to its initial/nearest position in case of interruption of positioning cycle of crossrail due to alarm on the machine or power failure. Details to be submitted.	Vendor to offer & submit			

SL. NO.	DESCRIPTION OF BHEL REQUIREMENT	REQUIRED	OFFERED	DEVIATION	REMARKS
8.2.3	Machine should have provision to switchover from position feedback system -2 (direct) to Position feed back system-1 (Motor encoder) through PLC program (for service personnel only).	Vendor to offer			
8.3	Help guide should be provided to use both (Standard system and OEM) diagnostic systems.	Vendor to offer			
9.0	**LEVELING & ANCHORING SYSTEM**				
9.1	Complete set of anchoring materials including foundation bolts, nuts, washers, fixators, leveling shoes etc for alignment of table, columns etc. and to fix the machine to the foundation should be supplied.	Vendor to offer			
10.0	**TOOLS FOR ERECTION, OPERATION & MAINTENANCE**				
10.1	Tools and Equipment required for erection of the machine shall be brought by the vendor (on returnable basis).	Vendor to accept			
10.2	Necessary tools like Torque Wrench, Spanners, Keys, grease guns etc. for operation and maintenance of the machine should be supplied by the vendor. List of such tools should be submitted with offer.	Vendor to offer			
10.3	Set of Test Mandrels/Cylindrical Bars along with Test Certificates/Reports for checking table run-out & alignment of ram etc. should be supplied with protection boxes.	Vendor to offer			

SL. NO.	DESCRIPTION OF BHEL REQUIREMENT	REQUIRED	OFFERED	DEVIATION	REMARKS
11.0	**AUTOMATIC TOOL CHANGER (ATC) : Vendor may offer any one solution i.e. either as per Sl.No. 11.1a or as per Sl.no. 11.1b**	Vendor to offer			
11.1a	**Cross Rail Mounted disc type automatic tool changer (ATC) for Tool Holders and One Floor Mounted Station for Single Holder (as explained below) :** The floor mounted station shall be provided at suitable location. This shall be used, only in case, if crossrail mounted ATC is not under operation for longer time for any reason. In that case, tool holders shall be taken out from ATC by overhead crane/jib crane and shall be kept suitably on shop floor. For change of holder, existing holder (clamped on ram) shall be dismounted on floor mounted station using CNC program/cycle for unclamping (to be provided by vendor). Using overhead crane/jib crane, this holder (on the station) shall be replaced by new holder which needs to be mounted on ram. New holder, available on floor mounted station, shall be mounted on the ram using tool clamping CNC program/cycle. Suitably durable protection cover for this station is to be provided for its proper upkeep, when not in use. Its location and also the space for keeping other holders on shop floor shall be shown on machine's total layout drg. For above purpose, any other better solution (subject to acceptance by BHEL) can also be recommended by vendor without any financial implication to BHEL.	Vendor to offer & submit details			
11.1b	**Floor mounted automatic tool changer (ATC) for all Tool Holders :** In this case, there shall not be any ATC on crossrail. All tool holders shall be loaded on this floor mounted ATC with provision of vertical movement (hydraulically or motorised). It should be possible to unload & load any tool holder mounted on ATC at any position of crossrail.	Vendor to offer & submit details			
11.2	No. of storage locations (to suit all the tool holders and boring bars, offered at Sl.no. 7.1) All tool holders/boring bars (Sl.No. 7.1) shall be mounted on ATC and shall be clamped in ram through CNC program for automatic ATC cycle. In case, any other type of tool holders is foreseen by vendor for proveout machining (Sl.No. 7.3.1.1 & 7.4.1.1), same should also be mounted on ATC.	Vendor to inform			
11.3	Tool selection method - Random	Vendor to confirm			
11.4	Maximum Tool Overhang out of different Holders in both directions i.e. radial (internal & external) and axial.	Vendor to inform			

SL. NO.	DESCRIPTION OF BHEL REQUIREMENT	REQUIRED	OFFERED	DEVIATION	REMARKS
11.5	Maximum Permissible Weight on each Pocket.	Vendor to inform			
11.6	Maximum Permissible Weight on Complete ATC.	Vendor to inform			
11.7	The Machine operation should be possible with or without referencing ATC.	Vendor to confirm			
11.8	ATC Drawing (preliminary) should be submitted with the offer.	Vendor to submit			
11.9	Provision for loading/unloading of different holders on ATC using (BHEL's) overhead crane, if required.	Vendor to offer			
11.10	Complete ATC should be covered from all sides and top with metallic protection having one door at one side for ATC operation.	Vendor to offer			
12.0	**CHIP & SPLASH GUARD**				
12.1	Chip / Splash Guards of sufficient height and made of rust resistant material (painted), shall be provided all around the Table (on front side of columns) to avoid spilling of Coolant and scattering of Chips on Operator's Panel and Shop Floor. Front part of splash guards shall be movable provided with safety glass for clear visibility of job to the operator.	Vendor to offer			
12.2	Additionally a fixed type of splash/ chip guard of atleast full turning height should be provided on rear side of machine i.e. around rear portion of table between columns .	Vendor to offer			
12.3	Movable splash guard should have interlock for table rotation. Opening of guards on front side of table should suit maximum possible size of the job which can be loaded on the table. The guards should not provide any hindrance with complete vertical movement of crossrail/ATC on both sides of the table.	Vendor to confirm			
12.4	Drawing (pre-liminary) of Chip/Splash Guards showing total height, layout and other details of the same should be submitted.	Vendor to submit			

SL. NO.	DESCRIPTION OF BHEL REQUIREMENT	REQUIRED	OFFERED	DEVIATION	REMARKS
13.0	**ACCESSORIES**				
13.1	**Auto Focus Video Camera System :** Complete system having Auto Focus Video Camera with zoom facility & its accessories & connections is to be offered. The camera, mounted inside its enclosure, shall be mounted on the ram or tool holders (Sl.No.7.1) with internally connected & concealed electrical connections. In case, the mounting on tool holders is offered, all tool holders/boring bars (at Sl.No. 7.1) should have provision for the same and suitable electrical connections. Freely hanging or unsupported/unprotected cables are to be avoided. Color monitor should be suitably located on operator's panel to view tool while machining and also as an aid for setting of casings/long cylindrical jobs using dial indicator. Camera eyes/lens and connecting cables shall be safe guarded against heat, chips, coolant, dust etc. to maintain clear visibility of the tool in these conditions. Suitable sockets for power connections shall be provided for both positions(ram and tool holders). Clamping details of camera on different tool holders shall be shown on drawings of tool holders.	Vendor to offer			
13.2	**JIB CRANE** : Jib Crane to suit heaviest holder/attachment (supplied with the machine) shall be offered. This shall be suitably located with all power operated movements (including swivel motion) through push buttons for mounting & dismounting of different tool holders, boring bars and attachments etc. and also for loading and unloading of jaw-boxes/vices whenever required.	Vendor to offer			
13.2.1	Load Capacity of the Jib Crane	Vendor to inform			
13.2.2	Length of Jib Crane arm	Vendor to inform			
13.2.3	Height of Jib Crane Column	Vendor to inform			
13.2.4	Swiveling Range to cover complete area to suit the requirement.	Vendor to inform			
13.2.5	Spare package for Jib Crane, if any. List to be submitted.	Vendor to sumit			
13.2.6	Model, make, specifications etc.	Vendor to inform			
13.2.7	Manufacturer's catalogue to be submitted.	Vendor to sumit			

SL. NO.	DESCRIPTION OF BHEL REQUIREMENT	REQUIRED	OFFERED	DEVIATION	REMARKS
13.2.8	Layout showing location of Jib Crane	Vendor to sumit			
13.3	**Self Propelled Articulating Boom :** Self Propelled Articulating Boom with following specifications is required for service personnel to carry out maintenance activities at high points of the machine, as and when required. - Electrically operated / Battery operated with charger for sufficient period. - Working Height = 14m or more (with Horizontal Reach = 6.5m or more) to suit highest point when ram & crossrail are at highest position. - Lift capacity = 220kg or more. - Soft-riding pneumatic tyres with excellent maneuverability. - Possibility to drive through standard doorways, to work close to area of work. - Equipped with all features that make it easy & safe to maneuver precisely where work needs to be carried out. - Provision for ascent & descent in vertical plane with or without retraction or extension of boom. - Quiet, emission-free. - Electric supply requirements/specifications - to be informed. - Turning Radius - to be informed. - Movement Max. speed - to be informed. - Safe cabin at top for working personnel with safety railing & other necessary features. - Product catalogue to be submitted.	Vendor to offer & submit details			
14.0	**SPARES :**	--			
14.1	**Spares Package for Air Conditioners (Sl.No.2.14.1):** 1.) Compressor - 01 No. for each type 2.) Condenser Fan - 01 No. for each type 3.) Cooling Fan - 01 No. for each type 4.) Digital Temperature Controller - 02 No. for each type	Vendor to offer			

SL. NO.	DESCRIPTION OF BHEL REQUIREMENT	REQUIRED	OFFERED	DEVIATION	REMARKS
14.2	**Spares Package for Chiller Units (Sl.No.2.14.2):** 1.) Compressor - 01 No. for each type 2.) Condenser Fan - 01 No. for each type 3.) Digital Temperature Controller - 02 No. for each type 4.) Thermostatic Expansion Valve - 02 Nos. for each type 5.) Evaporator Unit - 01 No. for each type.	Vendor to offer			
14.3	**Spares Package for Servo Voltage Stabilizer (Sl.No.4.0):** 1.) Control Cards - 01 Set (one no. of each type) 2.) Monitoring PCBs - 01 Set (one no. of each type) 3.) Servo Motor - 01 Set	Vendor to offer			
14.4	**Spares Package for Air Compressor & Dryer (Sl.No.6.1):** 1.) Air Filter - 06 Nos. 2.) Oil Filter - 15 Nos. 3.) Oil - 50 Ltrs. 4.) Air - Oil Separator Element - 06 Nos. 5.) Belt - 04 Nos. 6.) Flexible Hose Kit - 01 Set 7.) Compressor - 01 No. for each type of Air Dryer (refrigerant based only) 8.) Condenser Fan - 01 No. for each type of Air Dryer refrigerant based 9.) Digital Temperature Controller - 01 No. for each type of Air Dryer refrigerant based	Vendor to offer			
14.5	**Spare Package for Video Camera System (Sl.No. 13.1) :** Complete System, as offered against Sl.no. 13.1, in spare.	Vendor to offer			
14.6	**Spare Package for Self Propelled Articulating Boom (Sl.No. 13.3) :** Set of spares (Mechanical, Electrical, Electronic etc.), recommended by vendor for two years of troublefree operation & maintenance of the equipment. List of spare items with quantity to be submitted	Vendor to offer and submit details			
14.7	**Mechanical & Hydraulic Spares :** Following Spares are to be offered. Individual package prices against each Sl.No. (i.e. against each of Sl.No. 14.7.1 to 14.7.7 shall be quoted by Vendor.	Vendor to offer			
14.7.1	All types of Pumps used on machine i.e. Hydraulic, Hydrostatic, Lubrication, coolant and oil cooling system (1 no. each type)	Vendor to offer			

SL. NO.	DESCRIPTION OF BHEL REQUIREMENT	REQUIRED	OFFERED	DEVIATION	REMARKS
14.7.2	All types of Pressure control valves, Pressure reducing valves, Flow control valves & Direction control valves used in Hydraulic, Lubrication, Pneumatic & Coolant circuit. (1 no. of each type)	Vendor to offer			
14.7.3	All types of pressure switches, flow & float switches and pressure transducers used in Hydraulic, Lubrication, Pneumatic & Coolant circuit. (1 no. of each type)	Vendor to offer			
14.7.4	All types of filter inserts of regenerative type (5 nos. of each type)	Vendor to offer			
14.7.5	All types of filter inserts of disposal type & size (10 nos. each type)	Vendor to offer			
14.7.6	One set of belts (including timing belt) used in the machine.	Vendor to offer			
14.7.7	All types of Seals (2 no. of each type), Wipers & O-rings (5 nos. of each type) used in the machine.	Vendor to offer			
14.8	**Electrical /Electronic / CNC Spares :** Following Spares are to be offered. Individual package prices against each Sl.No. (i.e. against each of Sl.No. 14.8.1 to 14.8.14) shall be quoted by Vendor.	Vendor to offer			
14.8.1	Relays (2 Nos each type)	Vendor to offer			
14.8.2	Contactors (2 Nos each type)	Vendor to offer			
14.8.3	Semi-conductor Fuses (2 No each type & rating)	Vendor to offer			
14.8.4	Proximity Switches (2 Nos each type)	Vendor to offer			
14.8.5	Push Buttons (10 Nos each type)	Vendor to offer			
14.8.6	Indicating Lamps (10 Nos each type)	Vendor to offer			
14.8.7	Circuit Breakers (2 Nos each type)	Vendor to offer			
14.8.8	Encoder for spindle (1 No)	Vendor to offer			
14.8.9	Encoders & Scanning Heads for Linear Scales (1 No each type)	Vendor to offer			
14.8.10	PCU module (Hard disk loaded with Ghost of the machine after final commissioning)	Vendor to offer			
14.8.11	NCU module	Vendor to offer			
14.8.12	I/O Cards for PLC & I/R Module (1 No each type)	Vendor to offer			
14.8.13	Power Module & Control Cards for Main Drive as well as Feed Drives (1 Nos each type) with Main Power Switch	Vendor to offer			
14.8.14	Limit Switches/ Micro Switches (2 Nos each type)	Vendor to offer			

SL. NO.	DESCRIPTION OF BHEL REQUIREMENT	REQUIRED	OFFERED	DEVIATION	REMARKS
14.9	All types of spares for total machine and accessories should be available for at least ten years after supply of the machine. If machine or control is likely to become obsolete in this period, the vendor should inform BHEL sufficiently in advance and provide drawings of parts / details of spares & suppliers to enable BHEL to procure these in advance, if required	Vendor to confirm			
14.10	Complete list of spares for machine and accessories, along with specification / type / model, and name & address of the spare supplier shall be furnished along with documentation to be supplied with the machine	Vendor to confirm			
14.11	Repair service contract with supplier of offered CNC system for service & spares for motor drives & CNC Unit etc. applicable for complete gaurantee period as per Sl. No. 24.0.	Vendor to confirm			
15.0	**DOCUMENTATION :** Three sets of following documents, hard copies (with Soft Copies wherever specified), in English language should be supplied along with the machine. Each set consists of one no. of each document (Hard copy & Soft copy, as specified) In case of any change/modification in the machine/supplied equipment, if carried out by vendor, during commissioning and warranty period, modified documents in specified quantity shall be supplied after the change/modification.	Vendor to offer			
15.1	Operating manuals of Machine & CNC system	Vendor to offer			
15.2	Programming Manuals of Machine & CNC system	Vendor to offer			
15.3	Detailed Maintenance manual of machine with all drawings of machine assemblies/sub-assemblies/parts including Electrical/ Pneumatic/ Coolant/ Hydraulic circuit diagrams. All Assembly/ Sub Assembly Drawings shall be supplied with the part list also. Complete details including make, tolerance and precision class of all the critical bearings such as spindle bearings, ball screw support bearings, ball lead screw etc. with replacement procedure and approximate life of these bearings to be furnished.	Vendor to offer			
15.4	Maintenance Interface & commissioning manuals, PLC programming manual for CNC system, Interface & commissioning manuals for table, feed drives and auxiliary drive .	Vendor to offer			
15.5	Drawings for all supplied clamping jaws and its lead screws, coolant connections adapters, tool holders, boring bars, cassettes, adapters, sleeves, fixtures etc.	Vendor to offer			
15.6	Catalogues, Operation & Maintenance Manuals of all bought out items including drawings, wherever applicable .	Vendor to offer			

SL. NO.	DESCRIPTION OF BHEL REQUIREMENT	REQUIRED	OFFERED	DEVIATION	REMARKS
15.7	Detailed specification of all rubber items and hydraulic/lube fittings.	Vendor to offer			
15.8	Operating Manuals, Maintenance Manuals & Catalogues for supplied accessories viz. Voltage Stabilizer, Isolation Transformer, Air-Compressor, Video Camera System, Self Propelled Articulating Boom etc.	Vendor to offer			
15.9	Program print-outs (hard copy) with comments in English for PLC of main machine and auxiliary systems (if used) alongwith cross reference list and Input/Output list.	Vendor to offer			
15.10	PLC program, NC data & PLC data on CD. (PLC program S7 project file which can be loaded on the Siemens Field PG or Laptop for diagnostic purpose of PLC using Siemens Simatic manager)	Vendor to offer			
15.11	Complete back-up of PCU-50 hard disk on GHOST CD and clear written Instructions to take back-up and reloading of a new hard disk.	Vendor to offer			
15.12	Complete list of parts/items(Bill of materials) used in the machine in English language.	Vendor to offer			
15.13	Electrical Schematic Diagrams, Wiring Diagrams, Junction Box Layouts, Connector Diagrams and Cable Layouts of the machine in English.	Vendor to offer			
15.14	Drawings of machine assemblies/sub-assemblies/parts including Pneumatic/ Coolant / Hydraulic circuit diagrams. All Assembly/ Sub Assembly Drawings shall be supplied with the part list marked on it in English.	Vendor to offer			
15.15	Additional set of all the above documentation on CD ROM, wherever possible including complete backup (on CD) of all cycles/subroutines (provided by both vendor and supplier of CNC System) and any other special programs pertaining to different applications/machining processes/accessories etc. and CNC programs for proveout machining.	Vendor to offer			

SL. NO.	DESCRIPTION OF BHEL REQUIREMENT	REQUIRED	OFFERED	DEVIATION	REMARKS
16.0	**PROVEOUT MACHINING OF BHEL COMPONENT**	Vendor to offer			
16.1	Job Setting & Machining Process Plan & Requirement of Tools etc. for machining of proveout component shall be finally mutually agreed with vendor after the order, in case of order, without any financial implications. Final proveout component drawing may change, however, the machining features shall be in line with the original component drawing. Complete machining of prove out component shall be done by Vendor at BHEL works to the specified design accuracy and surface finish, using cutting tools & CNC programs to be provided by the vendor to prove the machine after complete erection, tests & test piece machining etc. Material for the proveout component shall be provided by BHEL. Vendor shall submit final job setting plan, machining process plan, tool layout & list with complete description, time study etc. for the proveout machining within three months of placement of order, in case of order. Vendor shall submit CNC programs prior to start of erection of Machine at BHEL works.	Vendor to accept & offer			
16.1.1	Vendor shall be responsible for any deviation/ rejection in proveout component to the extent of cost of component, due to wrong machining or malfunctioning of the machine during proveout machining. For this BHEL shall insure the component and the insurance premium cost shall be deducted from the bill of vendor.	Vendor to accept & confirm			
16.1.2	Vendor shall be fully responsible for machining of proveout components as per drawing and other requirements specified by BHEL to the full satisfaction of BHEL. Clarifications, if any required by vendor, regarding accuracy requirements of the proveout components, whether specified or not, should be discussed and cleared by vendor during initial technical discussions.	Vendor to accept & confirm			
16.1.3	BHEL may verify the accuracy/performance/capability/stability of the table with loading of a job/test piece upto specified max. capacity (Sl.No. 2.3.2) and rotating it for sufficient time.	Vendor to accept & confirm			
16.1.4	BHEL will verify performance & achievable accuracies (radial/facial runouts, ovality etc.) including vibration free machining of a diameter, face & groove on a test piece with max. overhang of ram (Sl.No.2.6.1) and these should be in line with requirement specified at Sl.No. 20.1.2.	Vendor to accept & confirm			

SL. NO.	DESCRIPTION OF BHEL REQUIREMENT	REQUIRED	OFFERED	DEVIATION	REMARKS
16.2	**PROVE-OUT MACHINING OF ONE COMPONENT**	Vendor to accept			
16.2.1	The proveout component shall be one Casing as per following sketch or similar. "Sketch_01″ & "Sketch_02" - Reference Sketch/Drg. enclosed. (Maximum Body Diameter: 5840mm, Swing dia: 7846mm, Maximum Height: 6470mm, Component Weight ~ 84 Ton) Vendor is required to quote on the basis of "Sketch_01" & "Sketch_02" & submit their offer. Subsequent queries, if any, may be got clarified by vendor during technical discussion w.r.t. detailed machining drgs. available with BHEL. Vendor is required to sign & submit (with offer or prior to technical discussion) a non-disclosure agreement (format enclosed) with BHEL in regard to sharing of such drg. information. Aforesaid clarifications & discussion shall not have any financial implication on the submitted offer. Vendor should quote a separate price against this clause.	Vendor to accept & offer			
16.2.2	**Material of Casing :** Fabricated structure made from carbon steel plates for Intermediate and High Temperature. Material manufactured from killed steel having a Carbon Equivalent of 0.44 max (melt analysed) Equivalent/Comparable Standards: 1. INDIAN : IS:2002-2009, Gr:2, Normalised. 2. EURPEAN : EN 10028-2: 2009, Gr.: P265 GH+N (Material No. 1.0425)	Vendor to accept			
16.2.3	**<u>Machining of Casing</u>** : Prove out machining shall include all types of turning, grooving & boring operations as per different drawings of Casing (at Sl.no. 16.2.1 ensuring required relative accuracies (concentricity, runouts etc). Machining shall be carried out in two setups.	Vendor to accept & offer			
16.2.4	All operations in machining of prove-out component shall be performed using CNC Programs supplied by vendor.	Vendor to accept & offer			

SL. NO.	DESCRIPTION OF BHEL REQUIREMENT	REQUIRED	OFFERED	DEVIATION	REMARKS
17.0	**TRAINING**				
17.1	Four BHEL Persons should be trained at vendor's works for a mutually agreed period(*) in the following areas: (a) CNC Programming for the machine & supplied accessories. (b) Electrical, Electronic & CNC maintenance for machine & other supplied equipment. (c) Mechanical & Hydraulic maintenance of the machine & other supplied equipment. (d) Operation of the machine & other supplied equipment. Pre-dispatch inspection (ref. Sl.No. 22.1) of the machine shall also be carried out by the team during their stay at vendor's works for the training. Vendor may specify days required for pre-dispatch inspection. BHEL reserves the right to choose no. of persons, field & period of training, out of above, while deputing their engineers for training. * Total period shall be 2 to 3 weeks, as recommended by vendor and agreed by BHEL, for satisfactory completion of above mentioned activities as per specified requirement.	Vendor to offer			
17.2	Air-fare, boarding & lodging for the trainees shall be borne by BHEL.	For vendor's information.			
17.3	Competent, English speaking experts shall be arranged by the vendor for satisfactory & effective training of BHEL personnel.	Vendor to accept & confirm			
17.4	Vendor should commit & offer to organize training of Electronics Engineer and Programmer at the CNC System Manufacturer's works/training school for advanced features and specialized training, if so required by BHEL.	Vendor to offer			
17.5	Vendor to quote for training on per man per day basis.	Vendor to offer			

SL. NO.	DESCRIPTION OF BHEL REQUIREMENT	REQUIRED	OFFERED	DEVIATION	REMARKS
18.0	**Foundation**				
18.1	**Layout of Machine's Installation :** Vendor shall submit the preliminary layout drawings (Ref Sl. No. 25.3) for getting BHEL's approval within one month or as mutually agreed from the date of Letter of Intent (LOI) or Purchase Order, whichever is earlier. Efforts shall be taken by BHEL for approval of layout drgs. within one month of its receipt from vendor. The Preliminary layout should be complete in all respect showing all requirement/ equipment/ peripherals pertaining to complete machine including space requirement for Voltage Stabilizer, Isolation Transformer, Air compressor, Chip Bin & all other accessories/ attachments/ offered items, mentioning all major dimensions.	Vendor to accept & offer			
18.2	**Soil Data :** As per old soil investigation report (copy enclosed) available with BHEL the soil properties in the area as per enclosed Layout - 'Site_00' are as below : (i) Density of soil at 4.2 M depth : 1.6 T/m3 (ii) Angle of internal friction : 32° (at 4.2 m depth) (iii) Coefficient of elastic uniform compression "Cu" = 3.0 Kg/cm3 (at 4.2m depth for 10 m2 or more contact area of foundation) (iv) Bearing Capacity at 4.2 m depth = 11 T/m2 (v) Water Table = 25m below ground level If verification of above data or any other soil data is required by vendor for foundation design, vendor may carry out required soil investigations within one month of placement of PO or as mutually agreed without any financial implication to BHEL. All required equipment for the same shall be arranged by vendor at site on returnable basis. BHEL shall facilitate to the extent possible.	Vendor to note			

SL. NO.	DESCRIPTION OF BHEL REQUIREMENT	REQUIRED	OFFERED	DEVIATION	REMARKS
18.3	**Foundation Design :** Complete Foundation Design shall be carried out by vendor. The design shall include details viz. static / dynamic load details etc. and final layout drawings shall be submitted by the supplier within three months or as mutually agreed after getting BHEL's approval for Preliminary layout Drgs.. Vendor shall design complete foundation for approved site and provide the design and working drawings to BHEL with all the required details and bill of materials including their specifications. Vendor shall provide to BHEL all the design details, static /dynamic forces, conformity of all the accuracy/performance requirements of foundation in the design stage, foundation test/tests requirements along with its parameters/ methodology/ procedure as well as the calculations ensuring its achievement in the design. The design and construction methodology /resources should be suitable for the chosen site and in line with commonly adopted construction practice for such work of construction of machine foundations at BHEL Haridwar. If BHEL feels necessary, it may share its observations w.r.t. foundation design & construction procedure for perusal and suitable review by vendor, but entirely at vendor's responsibility. The vendor shall also inform detailed specifications/requirement of earthing material & grouting requirements/procedures etc.	Vendor to accept & offer			
18.4	**Construction of Foundation** : BHEL shall construct complete foundation for the machine under supervision of vendor and at vendor's responsibility. BHEL may engage agency to construct the foundation as per the final design and specifications. Vendor shall supervise entire construction of foundation and also issue to BHEL its report of construction conformity at interval not exceeding 15 days during construction period. Vendor shall timely inform w.r.t. procedure / resources / arrangement and deployment of required inputs for satisfactory and smooth progress of work for completion of foundation. Vendor shall remain responsible for supervision of all the construction activities at site till completion of the entire foundation.	Vendor to accept & offer			

SL. NO.	DESCRIPTION OF BHEL REQUIREMENT	REQUIRED	OFFERED	DEVIATION	REMARKS
18.5	**Testing of Foundation :** Vendor shall arrange and conduct all required tests on the completed foundation, if required and decided by vendor. The timing/methodology/procedure/expected test results including conformance of these in design itself, shall be provided by the vendor to BHEL with the final design for construction. The test reports shall be shared with BHEL by the vendor promptly. Vendor shall be responsible for satisfactory performance of the foundation for compliance to machine's performance as per tender specifications.	Vendor to accept & offer			
18.6	**Grouting :** Vendor shall arrange and do the grouting of bolts/pockets etc. using the grouting material procured and provided by BHEL from amongst grouting materials commonly available in India.	Vendor to accept & offer			

SL. NO.	DESCRIPTION OF BHEL REQUIREMENT	REQUIRED	OFFERED	DEVIATION	REMARKS
19.0	**ERECTION & COMMISSIONING**				
	Supplier to take full responsibility for carrying out the erection, start up, testing of machine, it's control system & all types of other supplied equipment, machining of test pieces etc. Service requirement like power, air & water shall be provided by BHEL at only one point to be indicated by supplier in their foundation/layout drawings. Other requirements like overhead crane and unskilled helping personnel shall be provided by BHEL. Details of these requirements should be informed by vendor in advance. The available overhead crane capacity at the proposed location of the machine will be **150Tons** and crane height (lowest beam) from the shop floor at the site will be around 20.5m. (Reference sketch of Crane dimensions at site enclosed as Annexure-B). The vendor will ensure to make requisite arrangement for lifting of heavier consignment/ items/ assembly of the machine not getting covered by this capacity. In case, any other crane due to higher capacity or any other constraint is required for erection of the machine the same (like mobile crane etc) shall be arranged by vendor.	Vendor to accept & offer			
19.1	Erection & Commissioning of Voltage stabilizer, Isolation Transformer , Air Compressor and other accessories/attachments with all electrical & mechanical connections shall also be responsibility of the vendor.	Vendor to offer			
19.2	Successful proving of BHEL components (Sl.No.16.0) by the supplier shall be considered as part of commissioning for the machine. All tests, as mentioned at Sl.No. 22.0 (Machine Acceptance) and testing/demonstration of tele-diagnostic service etc. shall also be part of the commissioning activity.	Vendor to offer			
19.3	Tools, Tackles, Test Mandrels, instruments and other necessary equipment including Laser equipment required to carry out all erection & commissioning activities to be brought by the vendor. Out of the complete supply, all tools, tackles, mandrels etc. which may be required to maintain the machine at BHEL, after commissioning, shall not be taken back by vendor (refer Sl No 10.0). Other equipment including Laser equipment shall be arranged by vendor on returnable basis. Vendor to offer accordingly.	Vendor to accept			
19.4	Commissioning spares, required for commissioning of the machine within stipulated time, shall be brought by the supplier on returnable basis.	Vendor to accept			

SL. NO.	DESCRIPTION OF BHEL REQUIREMENT	REQUIRED	OFFERED	DEVIATION	REMARKS
19.5	All Cover Plates, sheets/plates for chutes for chips flow etc. required for the machine and its peripherals including pits, if any, shall be supplied and installed by the vendor.	Vendor to accept and offer			
19.6	Schedule of Erection and Commissioning shall be submitted with the offer.	Vendor to submit			
19.7	Terms & conditions for Erection & Commissioning should be furnished in detail separately by vendor along with offer.	Vendor to submit			
19.8	Portion, if any, of the machine, accessories/attachments and other supplied items where paint got rubbed or peeled off during transit or erection should be repainted and matched with the original adjoining paint by the vendor. For this purpose, the vendor should supply sufficient quantity of touch-up paint of various colours/shades of paints used. The vendor shall ensure performing touching after commissioning but before final acceptance.	Vendor to offer			
20.0	**ACCURACIES**				
20.1	**GEOMETRICAL ACCURACIES**				
20.1.1	Geometrical Accuracy Tests shall be in accordance with relevant & prevailing international standards viz. ISO 3655 or equivalent applicable standard. Detailed Test Charts for the same, clearly showing the accuracies to be achieved on the machine, shall also be submitted with the offer.	Vendor to offer & confirm			
20.1.2	The machine shall be suitable to achieve Facial and Radial runouts, within 15 microns. Same shall be demonstrated by vendor on a test piece during PDI at vendor’s works and also on proveout component during prove-out machining at BHEL works.	Vendor to confirm			
20.1.3	All other accuracies to confirm to specified standard (Latest Revision) or Suppliers Test chart whichever is finer and more accurate.	Vendor to inform			
20.1.4	All the Geometrical accuracies including test pieces machining etc. should be demonstrated to BHEL engineers during pre-acceptance at vendor's works and again during Erection & Commissioning at BHEL's Works. Test pieces & cutting tools are to be supplied by vendor for test pieces machining both at vendor's works & also at BHEL's works. Drawings of test pieces to be submitted with the offer.	Vendor to offer, confirm & submit			

SL. NO.	DESCRIPTION OF BHEL REQUIREMENT	REQUIRED	OFFERED	DEVIATION	REMARKS
20.2	**POSITIONING & REPEATABILITY ACCURACIES complying tender specifications including following:** (Should be measured as per VDI/DGQ 3441/ ISO 230-2 - Latest Revision) CHECKING BY USING LASER INTERFEROMETER.	Vendor to confirm			
20.2.1	Positioning accuracy in X axis (Pa) per 1000 mm	± 0.005mm or 0.01mm			
20.2.2	Positioning accuracy in Z axis (Pa) per 1000 mm	± 0.005mm or 0.01mm			
20.2.3	Repeatability in X axis (Ps)	0.008mm			
20.2.4	Repeatability in Z axis (Ps)	0.008mm			
20.2.5	Positioning accuracy over entire traverse in X axis (Pa)	Vendor to inform			
20.2.6	Positioning accuracy over entire traverse in Z axis (Pa)	Vendor to inform			
20.2.7	Total positioning error along X & Z axes per 1000 mm (P)	Vendor to inform			
20.2.8	Total positioning error along X & Z axes over entire traverse (P)	Vendor to inform			
20.2.9	Vendor to confirm clearly that it will be possible to machine proveout components to specified drawing accuracies with above mentioned machine accuracies.	Vendor to confirm			
20.2.10	All the Positioning and Repeatability accuracies should be demonstrated to BHEL engineers during pre-acceptance at vendor's works and again during Erection & Commissioning at BHEL's Works.	Vendor to offer			
21.0	**OPERATING CONDITIONS & THERMAL STABILITY**				
21.1	Total machine including all supplied items should work trouble free and should give specified accuracies under existing power supply and ambient operating conditions, as mentioned below at Sl. Nos. 21.2 & 21.3.	Vendor to accept & confirm			
21.2	**Power Supply (AC):** Voltage = 415V +10% / -10% of fluctuations , Frequency= 50Hz +3% / -3% , No. of phases = 3 Phase (3 wire system with out neutral).	Vendor to accept & confirm			

SL. NO.	DESCRIPTION OF BHEL REQUIREMENT	REQUIRED	OFFERED	DEVIATION	REMARKS
21.3	**Ambient Operating Conditions:** Temperature = 5 to 45 degree Celsius Relative Humidity = 95% max. Weather conditions are tropical. Atmosphere may be dust laden during some part of the year. Machine shall be kept in the normal shop floor condition without any temperature controlled enclosure/shop. Max. temperature variation is 25 deg Celsius in 24 hours.	Vendor to accept & confirm			
21.4	**Thermal Stability:** Thermal Stability of the complete machine and all supplied items keeping in view the specified Ambient Conditions at Sl.No. 21.3, specified accuracies, machining requirements of BHEL component and trouble free operation of the machine to be ensured by vendor. Since the machine shall be installed in shop with operating conditions as per Sl.No. 21.3, the vendor shall ensure to have provisions in the machine for achieving the drawing accuracies on the job under these conditions. Accordingly, Vendor to ensure that machine is suitable for above and provisions on the machine for the suitability should be included by Vendor.	Vendor to offer & confirm			
21.5	The machine, including attachments and accessories, should be suitable for continuous operation to its full capacity for 24 hours a day and 7 days a week throughout year. Vendor to ensure and confirm the same.	Vendor to offer & confirm			
22.0	**MACHINE ACCEPTANCE** **(Tests/Activities to be performed & demonstrated by Vendor)**	Vendor to accept & confirm			
22.1	**Tests/Activities to be carried out at vendor's works on the machine before dispatch :** All these activities (As per Sl.Nos. 22.1.1 to 22.1.5) shall be part of pre-dispatch inspection of the machine which shall be carried out by vendor in presence of BHEL's team during their stay at vendor's works for the training (Ref. Sl.No. 17.1). Report of the same shall be submitted to BHEL by vendor. Call for PDI with certificate of full preparedness for PDI and availability of all supplies (including tools, spares, documentations etc) at vendor's works shall be sent by vendor atleast 45 days before the scheduled start date of PDI.	Vendor to accept & confirm			

SL. NO.	DESCRIPTION OF BHEL REQUIREMENT	REQUIRED	OFFERED	DEVIATION	REMARKS
22.1.1	Demonstration of specified/offered Geometrical accuracies as per test chart/standard and specified values at Sl.No. 20.1	Vendor to accept & confirm			
22.1.2	Demonstration of specified/offered Positioning accuracies as per test chart/standard and specified values at Sl.No. 20.2	Vendor to accept & confirm			
22.1.3	The machine should be tested for continuous running of 48 hrs. If any break down occurs during this test, the test should be repeated for 48 hrs from that time.	Vendor to accept & confirm			
22.1.4	Demonstration of all features of the machine, control system & accessories. This shall also include verification of table's hydrostatic bearing diameter & table construction (ref Sl No 2.3.7, 2.3.18, 2.3.23 A) during PDI (pre-dispatch inspection) of the machine.	Vendor to accept & confirm			
22.1.5	Machining of standard test pieces as per AFNOR/ISO/NAS & VDI for turning (along with threading) operations etc. for machining accuracy tests. Vendor to supply test pieces.	Vendor to accept & confirm			
22.2	**Tests/Activities to be carried out at BHEL works while commissioning the machine : as per Sl.Nos. 22.2.1 to 22.2.10**	Vendor to accept & confirm			
22.2.1	Demonstration of specified/offered Geometrical accuracies as per test chart/standard and specified values at Sl.No. 20.1	Vendor to accept & confirm			
22.2.2	Demonstration of specified/offered Positioning accuracies as per test chart/standard and specified values at Sl.No. 20.2	Vendor to accept & confirm			
22.2.3	Full load test to demonstrate the maximum power & cutting capacity of the machine. Vendor to supply test piece and required tools for the machining alongwith machine.	Vendor to accept & confirm			
22.2.4	The machine should be tested for continuous running of 48 hrs. If any break down occurs during this test, the test should be repeated for 48 hrs from that time.	Vendor to accept & confirm			

SL. NO.	DESCRIPTION OF BHEL REQUIREMENT	REQUIRED	OFFERED	DEVIATION	REMARKS
22.2.5	Demonstration of all features of the machine, control system & accessories to the satisfaction of BHEL for efficient and effective use of the machine.	Vendor to accept & confirm			
22.2.6	Demonstration by actual use of all supplied accessories to their full capacity for required applications.	Vendor to accept & confirm			
22.2.7	Machining of standard test pieces as per AFNOR/ISO/NAS & VDI for turning (along with threading) operations for machining accuracy tests. Vendor to supply test pieces & required tools for their machining alongwith machine.	Vendor to accept & confirm			
22.2.8	Successful machining of proveout components to required drawing accuracies as per Sl. No. 16.0.	Vendor to accept & confirm			
22.2.9	Two weeks of supervision by Vendor of independent operation of machine by BHEL after job proveout.	Vendor to accept & confirm			
22.2.10	Training of BHEL machine operators in operation of complete machine & accessories etc by the supplier's experts / engineers during their stay at BHEL works. Vendor should also organize/imparts training in the field of Air Conditioning by an expert at BHEL works. This training is in addition of the training specified at Sl.No. 17.0	Vendor to accept & confirm			
23.0	**PACKING**				
23.1	***Sea worthy*** (For shipment by Sea) / ***Road worthy*** & ***rigid packing*** for all items of complete machine, CNC System, all Accessories and other supplied items to avoid any damage/loss in transit.	Vedor to confirm			
23.2	When machine is dispatched in containers, all small loose items shall be suitably packed in boxes with proper support to avoid collision of items within box. Other large items shall also be packed/fastened securely on suitable sleepers and its movement within the containers shall be suitably arrested.	Vedor to confirm			
23.3	Indigenous supply items like Voltage Stabiliser, Isolation Transformer, Air Compressor etc. should be fully packed in proper rigid boxes for safe transportation and avoiding pilferages.	Vedor to confirm			
23.4	The long and slender items should be packed in boxes well supported by longitudinal steel angle frames with suitable strappings for encasement so that the packing becomes sturdy.	Vedor to confirm			

SL. NO.	DESCRIPTION OF BHEL REQUIREMENT	REQUIRED	OFFERED	DEVIATION	REMARKS
23.5	Critical components such as ram or ram heads need to be packed properly with above type of packing.	Vedor to confirm			
23.6	In case of wooden packing, planks of 20-25mm thick and 100-150mm wide need to be suitably placed at close intervals for giving rigidity to packing appropriately.	Vedor to confirm			
23.7	Special care need to be taken of Electrical and electronic control panels as well as other precision.	Vedor to confirm			
23.8	Guideways of columns/ Beds/ Other structural members need to be protected and well packed.	Vedor to confirm			
23.9	Wherever required, steel cages and supports are to be provided for making it damaged proof in transit.	Vedor to confirm			
23.10	Wood used for packing should be seasoned & shall be free of termites.	Vedor to confirm			
24.0	**GUARANTEE:** Guarantee for complete machine and all supplied accessories/ equipment for 24 months from the date of acceptance of the machine. This shall cover back to back gaurantee by foreign partner is case of vendor falling under category of Sl. No. 26.2	Vendor to offer			
25.0	**GENERAL**				
25.1	Machine Model No.	Vendor to inform			
25.2	Total connected load (KVA)	Vendor to inform			
25.3	Total Space required (Length, Width, Height) for complete machine, accessories/ attachments and other supplied items like Voltage Stabilizer, Isolation Transformer & Air compressor etc.considering Sl. No. 25.3.1 & 25.3.2.	Vendor to inform			
25.3.1	Layout of space, foreseen in our running machine shop, for installation of the machine is enclosed (Site_00). Efforts are to be taken by vendor to accommodate complete machine with its peripherals & the foundation block within this area. The machine shall be installed at shop floor level with its table top suitably above shop floor level.	Vedor to confirm			

SL. NO.	DESCRIPTION OF BHEL REQUIREMENT	REQUIRED	OFFERED	DEVIATION	REMARKS
25.3.2	Sketch showing height of overhead crane (150 Ton capacity) girder & hooks is also enclosed (Annexure-B). Machine is to be accommodated with table top at shop floor level, as mentioned above and with its highest point clear from crane girder to maintain safe & trouble free movement of crane irrespective of position of machine's highest point (i.e. Ram housing top when cross rail is at highest point & ram is at reference position). Considering above requirements, Preliminary layout drawings should be submitted with the offer, as specified at Sl. No. 18.1.	Vedor to confirm & submit			
25.4	**Painting of Machine / Electrical Panels** : RAL 6011 Apple Green (Polyurethane Paint)	Vendor to offer			
25.5	Total weight of the machine	Vendor to inform			
25.6	Weight of heaviest part of machine	Vendor to inform			
25.7	Weight of the heaviest assembly/sub assembly of the Machine	Vendor to inform			
25.8	Dimensions of largest part/assembly of the machine	Vendor to inform			
25.9	Vendor to submit, alongwith offer, reference list of customers where CNC Vertical Borer machines of table size 8m and above, have been supplied mentioning broad specifications of the supplied machine.	Vendor to submit			
25.10	Detailed catalogues, sketches/drawings/photographs pertaining to the offered machines and accessories/attachments/items should be submitted with the offer.	Vendor to submit			
25.11	Hydraulic, Pneumatic & Oil piping should be preferably metallic except places where flexible pipings are essential. All the pipes required for the same shall be supplied by the vendor.	Vendor to confirm			
25.12	All Cables and Hoses etc. should be well supported & protected in trays/brackets/drag chains etc.	Vendor to confirm			
25.13	Ladder and Maintenance platform is to be provided to access the machine elements located at the top of the columns.	Vendor to offer & confirm			

SL. NO.	DESCRIPTION OF BHEL REQUIREMENT	REQUIRED	OFFERED	DEVIATION	REMARKS
26.0	**QUALIFYING CONDITIONS**				
26.1	Only those vendors (OEMs - Original Equipment Manufacturers) should quote, who have commissioned in the past at least one Double Column CNC Vertical Boring Machine having following sizes & technical features (a, b, c & d) either (i) in atleast one country other than the country from where the machine tool will be supplied to establish vendor's (OEM's) global business activity or (ii) in India; and the referred machine is presently working satisfactorily for more than one year after its commissioning (on the original date of opening of Tender, declared in NIT). The referred machine should be in use for machining of large size accurate components (diameter 6m or more) with high accuracies i.e. radial & facial runouts within 0.02mm. The referred machine should have following sizes & technical features: **a)** Table Diameter 8m (or more) & Weight Capacity 200T (or more) with Hydrostatic Bearing in Table. **b)** Turning Height of 7m or more with Full CNC Programmable Continuous Axis for Crossrail's Vertical Movement. **c)** Hydrostatic Guideways on both X & Z axes. **d)** Crossrail mounted or Floor mounted (with vertical driven movement) ATC (Automatic Tool Changer) for Tool Holders.	Vendor to provide reference details and confirm			
26.2	However, such Indian machine tool vendors (OEMs), who do not meet specified qualifying conditions, can quote if they have running Collaboration/ Joint Venture /Joint Working Arrangement for manufacture of Double Column CNC Vertical Boring Machine having sizes/features as required at **a, b, c & d** above, with foreign machine tool manufacturer, who meets specified qualifying conditions. Such Indian machine tool vendor's (OEMs) shall have to submit from their foreign partner a back to back guarantee for satisfactory performance of the offered machine in compliance to all specified tender requirements.	Vendor to accept & confirm			
26.3	BHEL reserves the right to accept or reject the OEMs based on the assessment of their technical and financial capability.	Vendor to accept & confirm			

SL. NO.	DESCRIPTION OF BHEL REQUIREMENT	REQUIRED	OFFERED	DEVIATION	REMARKS
26.4	In respect of Indian vendors (OEMs) against "26.2" above, BHEL reserves the right to accept or reject both the Indian vendors (OEMs) & their Foreign Partners based on the assessment of their technical and financial capability.	Vendor to accept & confirm			
26.5	Only in case of the machine referred by vendor (at "26.1" above) is not meeting full clause at "b" (of "26.1" above) and meeting remaining qualifying conditions, vendor is required to provide additional reference of machine as per any one of the following three options: **Option-1**. *In case, the referred machine (at "26.1" above) has Turning Height of 7m or more but is not equipped with full CNC Programmable Continuous Axis for Crossrail's Vertical Movement*: The vendor (OEM) is required to provide additional reference of at least one CNC machine having full CNC Programmable Continuous Axis for Crossrail's Vertical Movement between its two columns having clearance of at least 6M in-between. **Option-2**. *In case, the referred machine (at "26.1" above) has Turning Height less than 7m but equipped with full CNC Programmable Continuous Axis for Crossrail's Vertical Movement*: The vendor (OEM) is required to provide additional reference of at least one CNC double column vertical borer machine with moving cross rail & having turning Height of 7m or more and having clearance of atleast 6m in between two columns. **Option-3:** *In case, the referred machine (at "26.1" above) has Turning Height less than 7m and also not equipped with full CNC Programmable Continuous Axis for Crossrail's Vertical Movement :* The vendor (OEM) is required to provide additional reference of at least one CNC double column machine having machining Height of 7m or more & clearance of at least 6M in-between its two columns and equipped with rotary table for machining & moving cross rail with full CNC Programmable Continuous Axis for Crossrail's Vertical Movement.	Vendor to provide reference details and confirm			
26.6	The machine, referred against "26.5" - "Option-1" or "Option-2" or "Option-3" above, should also have been supplied and commissioned by vendor either (i) in atleast one country other than the country from where the machine tool will be supplied or (ii) in India; and the referred machine is presently working satisfactorily for more than one year after its commissioning (on the original date of opening of Tender, declared in NIT).	Vendor to inform /submit			

SL. NO.	DESCRIPTION OF BHEL REQUIREMENT	REQUIRED	OFFERED	DEVIATION	REMARKS
26.7	The following information should be submitted by the vendor about the company/companies where the machine(s) referred at “26.1” and also at “26.5” (if applicable) have been supplied.	Vendor to accept			
26.7.1	Name of the customer / company where referred machine(s) is/are installed.	Vendor to inform			
26.7.2	Complete postal address of the customer.	Vendor to inform			
26.7.3	Month & Year of commissioning.	Vendor to inform			
26.7.4.1	Parameters of machine(s) supplied (Table diameter, Max. Turning Height, Table Load Carrying Capacity, Confirmation for a, b, c & d mentioned above at “26.1”).	Vendor to inform			
26.7.4.2	Application with accuracies for which the referred machine(s) is/are supplied and in use.	Vendor to inform			
26.7.5	Name and designation of the contact person of the customer.	Vendor to inform			
26.7.6	Phone, FAX no. / e-mail address of the contact person of the customer.	Vendor to inform			
26.7.7	Performance Certificate from the customers regarding satisfactory performance of machine(s) supplied to them (Original Certificate or Through E-mail directly from the customer). The original performance certificate may be returned, if required, after verification by BHEL.	Vendor to accept & submit certificate			
26.7.8	BHEL reserves the right to verify the information provided by vendor for the referred machine(s) which may include visit of BHEL's team to referred customer's works for verification of performance of the machine(s) including machining accuracies, being achieved. It shall be responsibility of vendor to facilitate visit of BHEL's team at their referred customer works. The Travel and Boarding expenses for BHEL Personnel shall be borne by BHEL. In case, the visit, if so desired by BHEL, could not be organised by vendor or the information provided by vendor is found to be false/incorrect or accuracies being achieved are found inferior than what required i.e. radial & facial runouts within 0.02mm on large size components (diameter 6m or more), by BHEL's team, in case of their visit, the offer shall not be considered as qualified.	Vendor to accept & confirm			

SL. NO.	DESCRIPTION OF BHEL REQUIREMENT	REQUIRED	OFFERED	DEVIATION	REMARKS
27.0	**NETWORKING**				
27.1	Machine control should have necessary hardware and software for interfacing with gigabit Ethernet Local Area Network with 100 MB/sec through UTP cables for NC program and other related data transfer. This network to be connected to wide area network/Internet. The networking should have following capabilities:	Vendor to offer			
27.2	The machine shall appear as a node in the Entire Network. (Network Neighborhood)	Vendor to offer			
27.3	The program transfer shall be by simple copy and paste method provided sharing access is allowed between any PC and the machine across the network.	Vendor to offer			
27.4	The program transfer between CNC system and network should also be possible in CNC Mode.	Vendor to offer			
28.0	**MACHINE MONITORING SYSTEM (MMS) SIGNALS**				
28.1	Following MMS signals would be made available on a specifically earmarked terminal strip. These MMS signals would be sourced from a SIMATIC S-7 PLC output card separately.	Vendor to offer			
28.2	Control ON	Vendor to offer			
28.3	Cycle ON	Vendor to offer			
28.4	Spindle Running	Vendor to offer			
28.5	Feed Active (Any of the axes moving)	Vendor to offer			
28.6	M30 (Program Stop)	Vendor to offer			
29.0	**OPTIONAL ITEMS**				
29.1	Attachment / Accessary/ Device, complete in all respects including required indicating instruments & fasteners etc., required by vendor to check runout & concentricity of both sides simultaneously i.e. detail "C2" side at top & finished detail "C1" side at bottom of Casing2 (refer sketch "Sketch_03.PDF" &"Sketch_04.pdf") for its perfect vertical alignment in both setups.	Vendor to offer			
29.2	Set of Vices: Complete set of Four Nos. of Jaw-Boxes/Vices (in addition to vices offered at Sl No 2.3.6)	Vendor to offer			
---------- ***** ----------					

Sketch_01

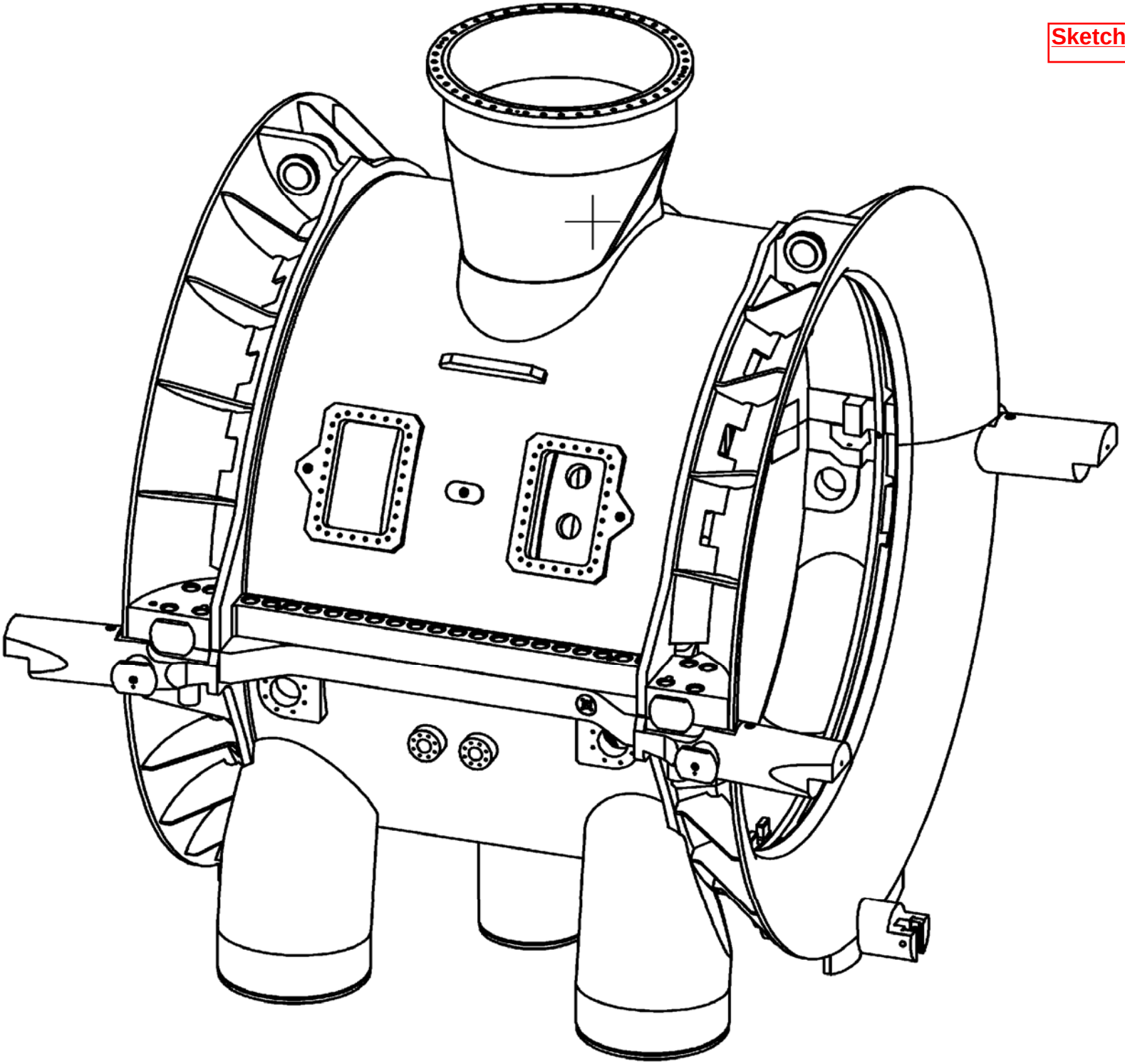

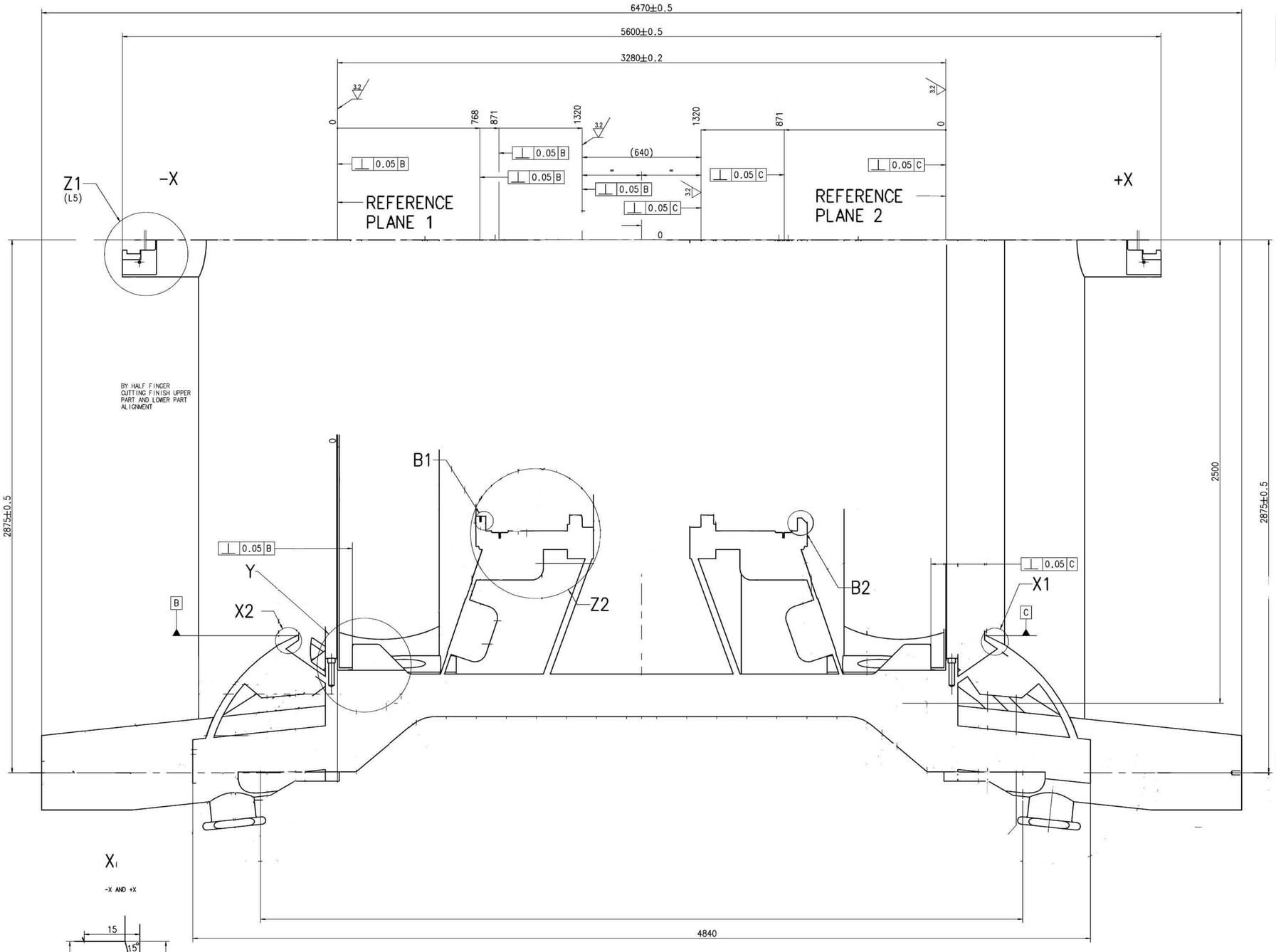
6470±0.5
5600±0.5
3280±0.2
REFERENCE PLANE 1
REFERENCE PLANE 2
-X
+X
Z1
(L5)
BY HALF FINGER CUTTING FINISH UPPER PART AND LOWER PART ALIGNMENT
B1
B2
Z2
X1
X2
Y
2875±0.5
2500
4840

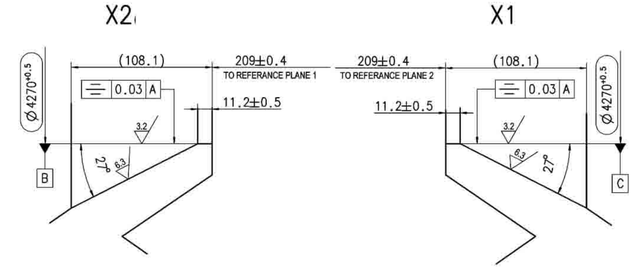
X2
X1
209±0.4
TO REFERANCE PLANE 1
TO REFERANCE PLANE 2
11.2±0.5
27°

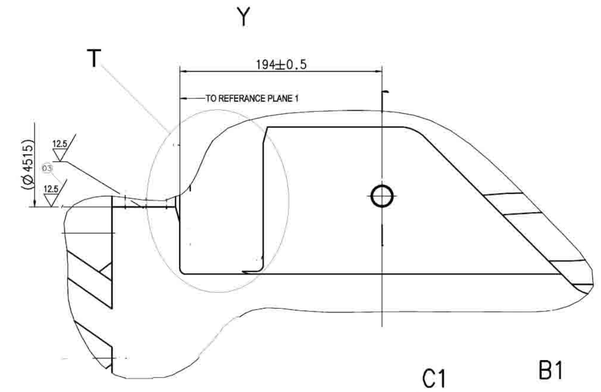
Y
T
194±0.5
TO REFERANCE PLANE 1

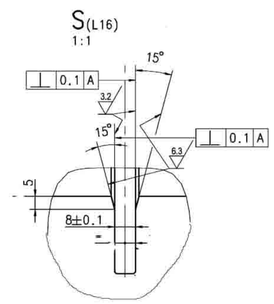
S(L16)
1:1
15°
8±0.1

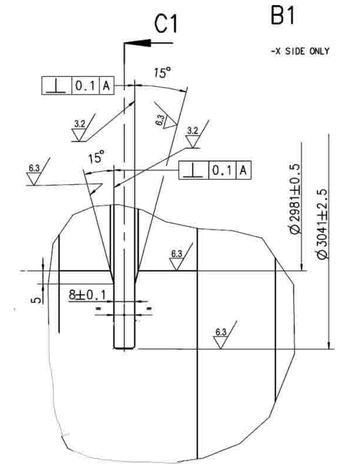
C1
B1
-X SIDE ONLY
15°
8±0.1
Ø 2981±0.5
Ø 3041±2.5

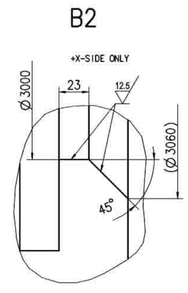
B2
+X-SIDE ONLY
Ø 3000
23
(Ø 3060)
45°

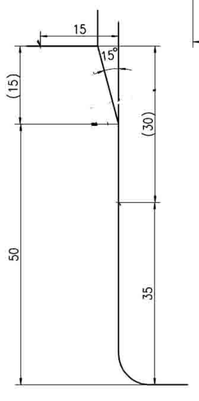
X1
-X AND +X
15
15°
(15)
(30)
50
35

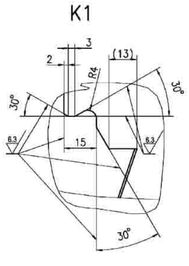
K1
30°
15

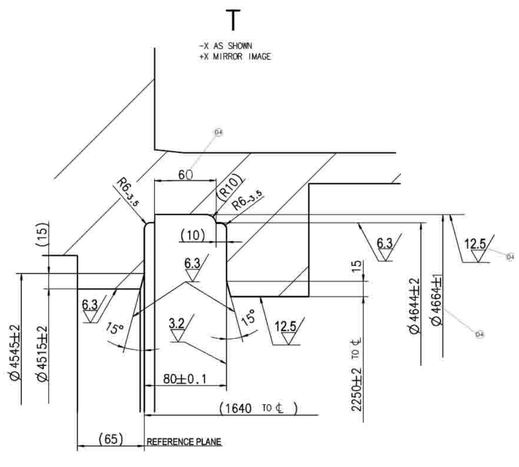
T
-X AS SHOWN
+X MIRROR IMAGE
R6-3.5
(R10)
80±0.1
(1640 TO ℄)
(65)
REFERENCE PLANE
Ø 4545±2
Ø 4515±2
Ø 4644±2
Ø 4664±1
2250±2 TO ℄

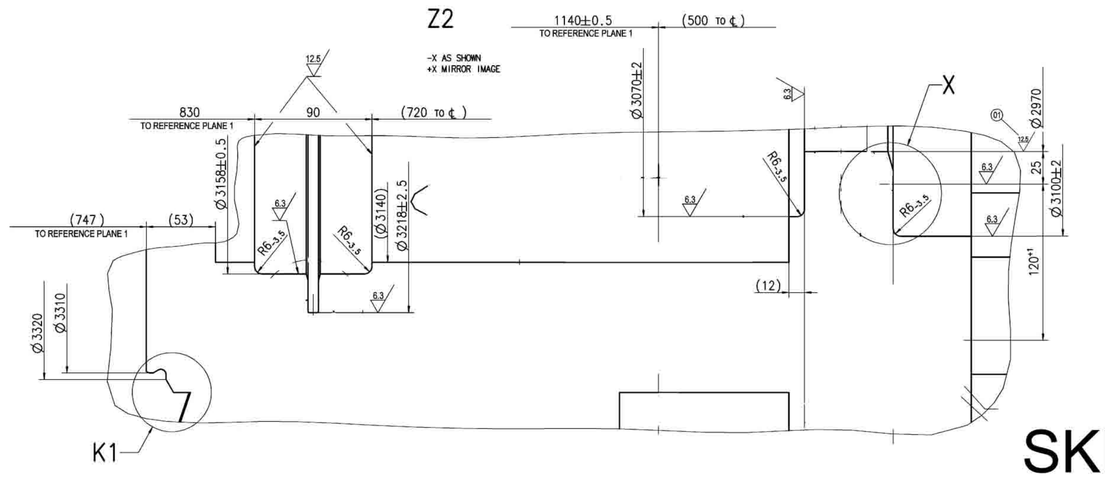
Z2
-X AS SHOWN
+X MIRROR IMAGE
1140±0.5
TO REFERENCE PLANE 1
(500 TO ℄)
830
TO REFERENCE PLANE 1
90
(720 TO ℄)
(747)
TO REFERENCE PLANE 1
(53)
Ø 3070±2
Ø 3158±0.5
(Ø 3140)
Ø 3218±2.5
Ø 3320
Ø 3310
Ø 2970
Ø 3100±2
120°
K1
X

SKETCH_02

Sketch_03

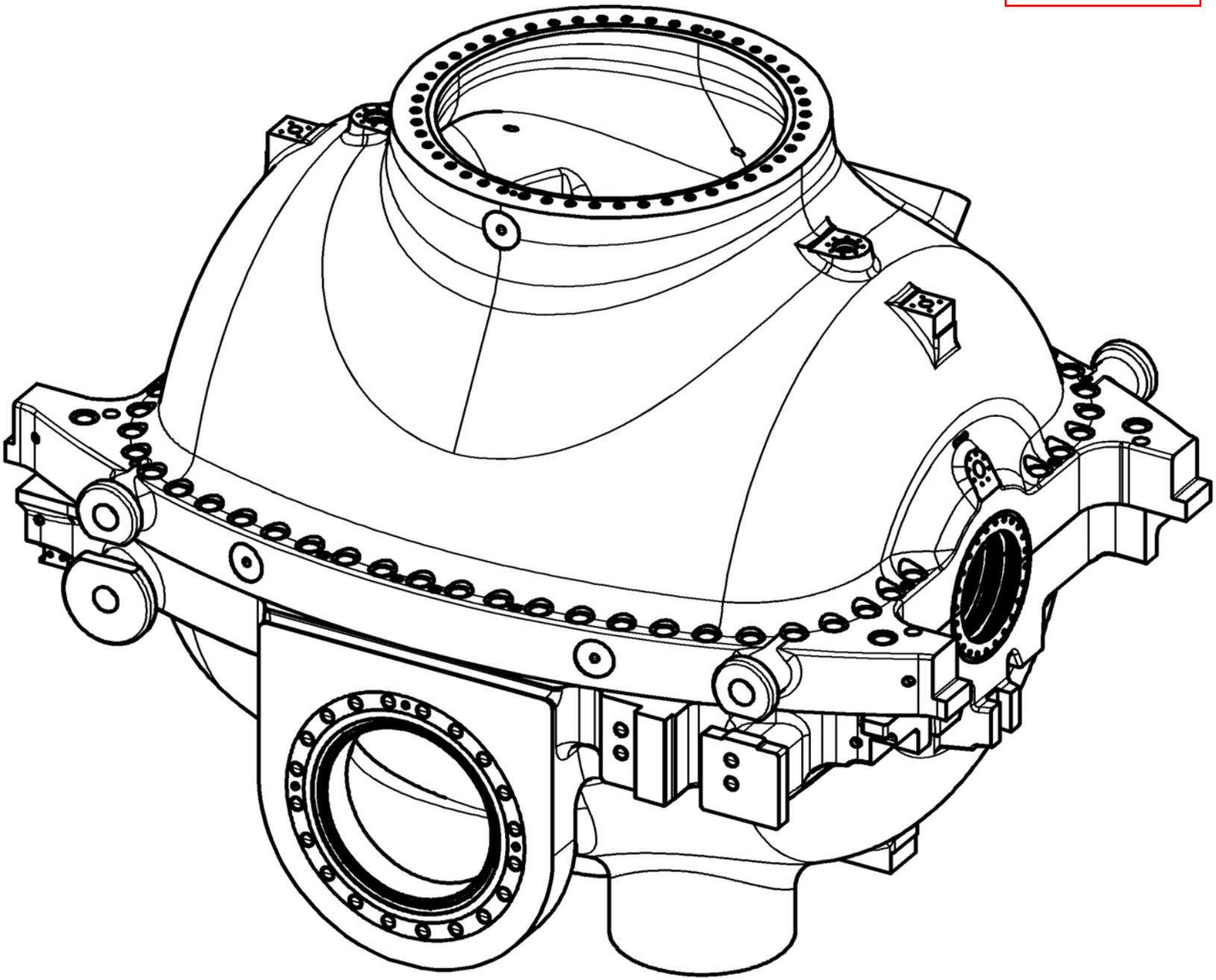

Sketch_04

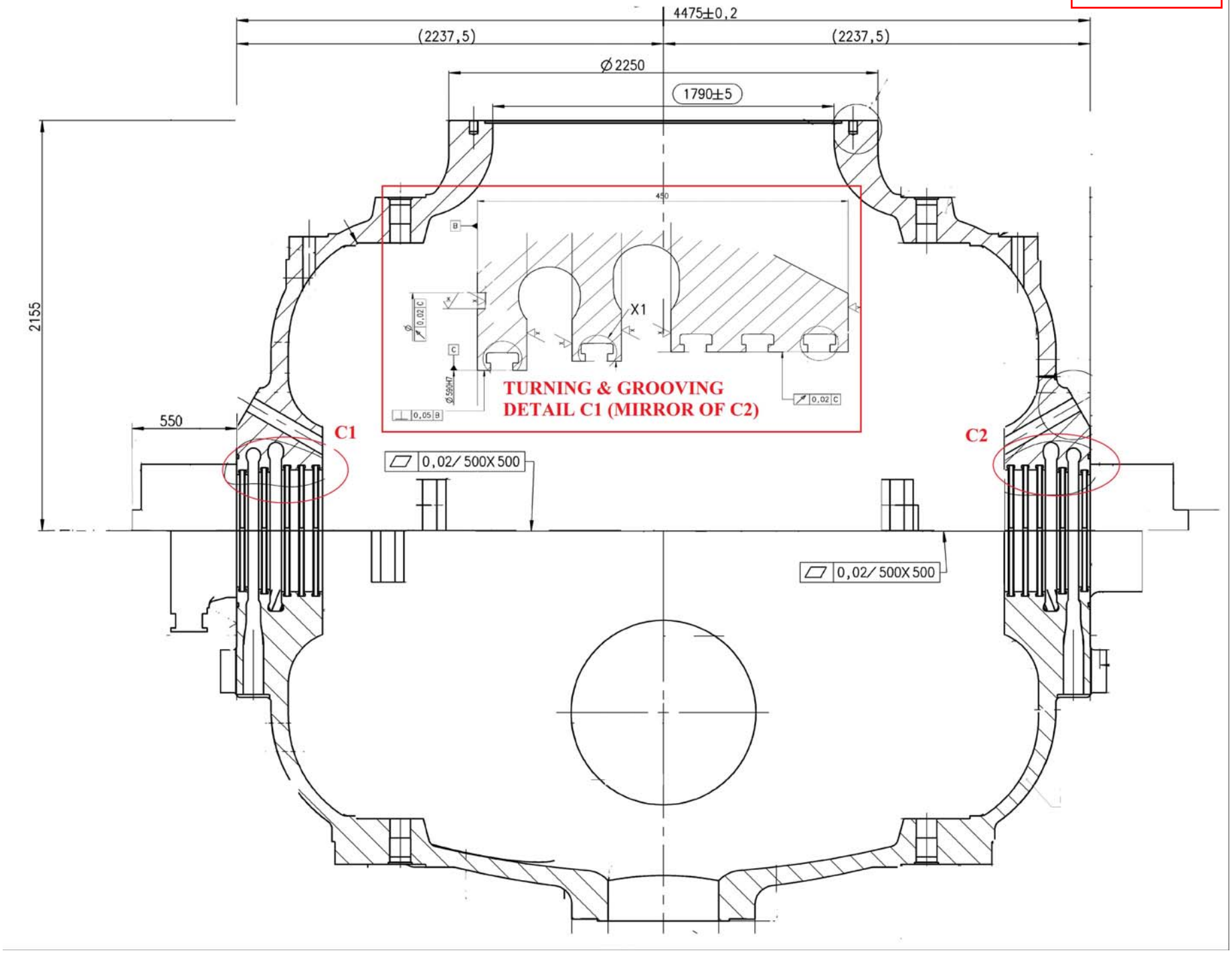
4475±0,2
(2237,5)
(2237,5)
∅2250
1790±5
2155
550
C1
C2
0,02/ 500X 500
0,02/ 500X 500
450
X1
TURNING & GROOVING
DETAIL C1 (MIRROR OF C2)
0,05 B
0,02 C
0,02 C

ANNEXURE - B

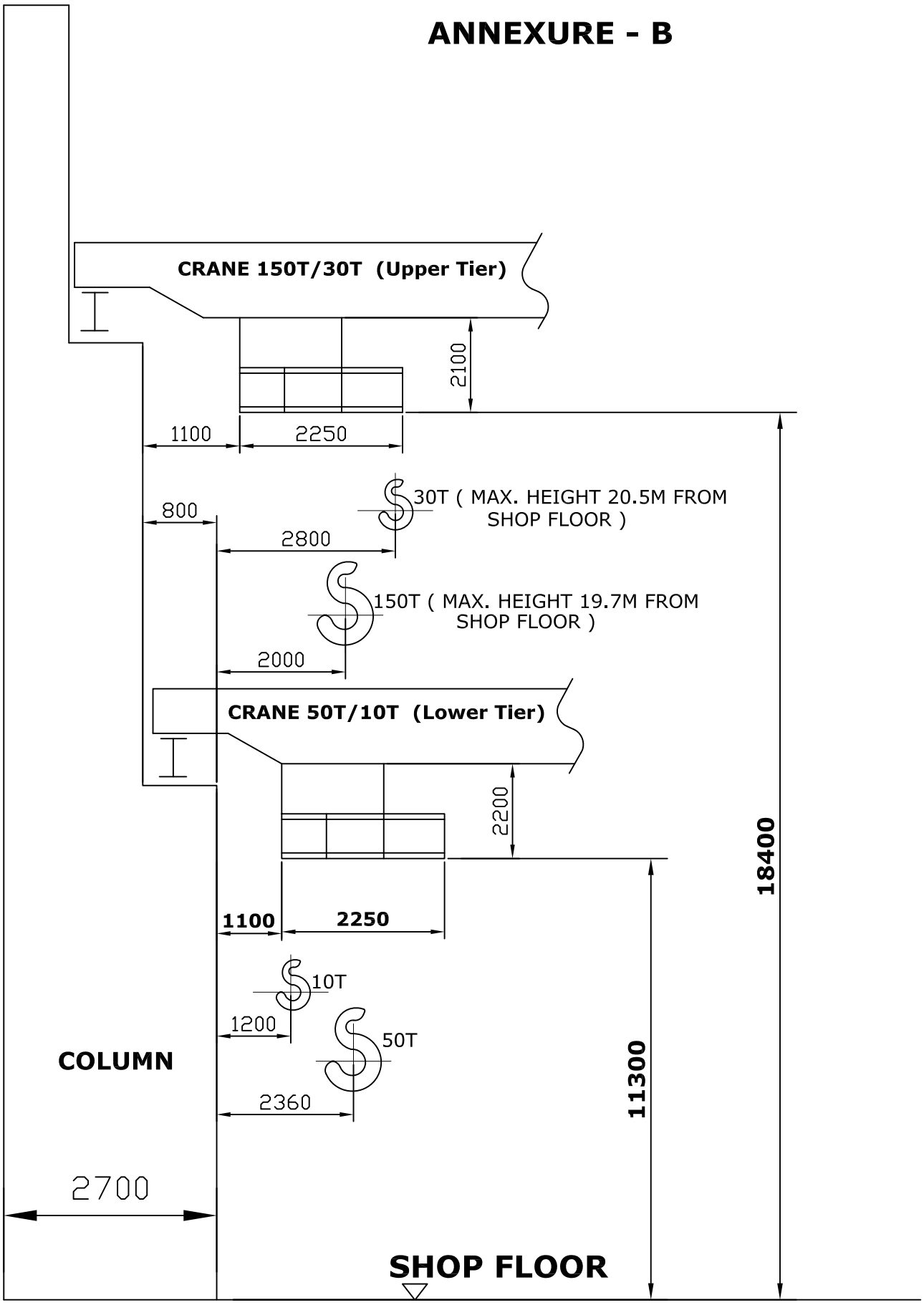

DIMENSIONS FOR OVERHEAD CRANES
(Not To Scale)

FIRST ANGLE PROJECTION | (ALL DIMENSIONS ARE IN mm)

DG—45

DRAWING NUMBER R6300 - 0965

3.2 ∇ THE REST

SECTION-AA

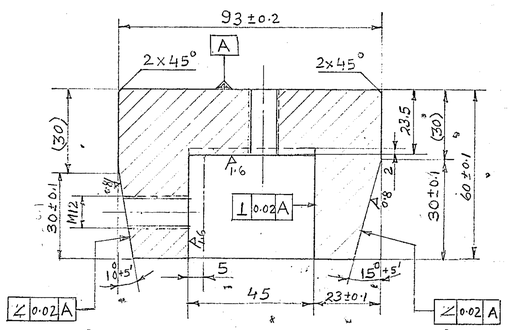

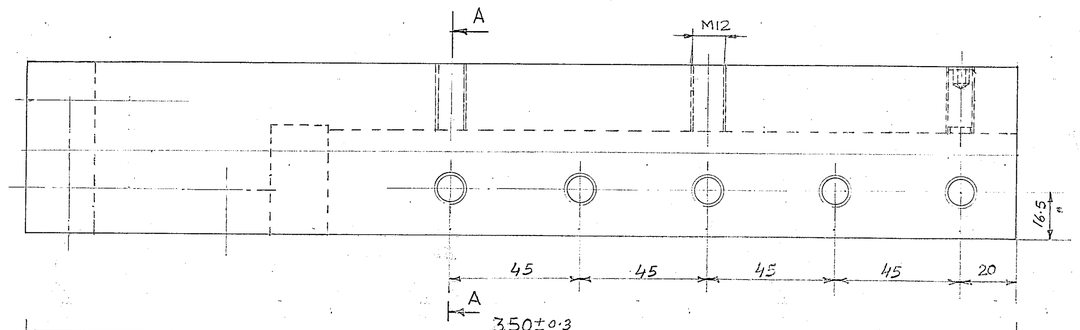

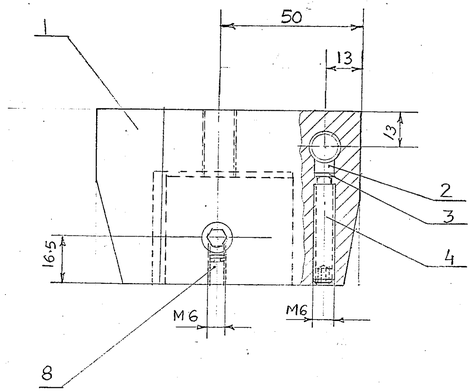

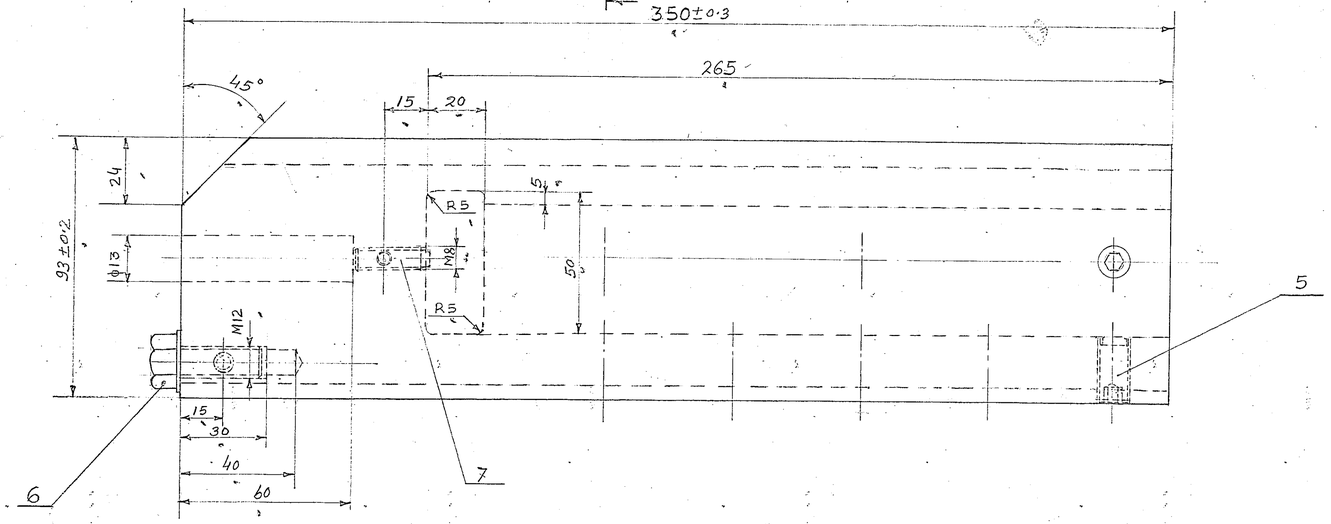

1. SHARP EDGES TO BE ROUNDED OFF.
2. CARBURISE TO A DEPTH OF 1.6÷2mm. AND HARDEN TO HRC 50÷55 AS PER P.S. 0912-002.
3. CONSERVATION TO BE DONE AS PER TL 30007

◊ MARK
R6300-0965

VAR OO	REMARKS	ITEM No.	DESCRIPTION	STD	DRAWING No.	MATERIAL CODE / VAR	MATERIAL SPECN	UNIT	UNIT WEIGHT	GS	ZONE
		8	SCRU. GRB. SOC. AP M6X8		AA 7125110	CL 12.9 / AA 7125110			1		
		7	SCRU. GRB. SOC. AP M8X25		AA 7125110	CL 12.9 / AA 7125110			1		
		6	BOLT HEX. P M12×28		AA 7111122	CL. 8.8 / AA 7111122			1		
		5	SCRU. GRB. SOC. AP M12×22		AA 7125110	CL 12.9 / AA 7125110			8		
		4	SCRU. GRB. SOC. AP M6X35		AA 7125110	CL. 12.9 / AA 7125110			1		
		3	WASHER Φ5.0 t=1		–	ST 4D / –			4		
		2	LOCKING PIECE		R6300-0965/001	BRASS / –			2		
		1	CASSETE		–	13NiCr180 / AA10503			1.200 / 1		

CARD TYPE-3 | CARD TYPE-1 | CARD TYPE-2

GRADE OF UNTOL. DIM:–
MCG. :– G/M/F/ AA 023 0208
WELDING :– 'T1' 0 610.003
GAS CUTTING :– T3' AA 0621101

GMS No./GR. SP. No.			STATUS OF DRG.
AGREED DEPT.	NAME	SIGN	DATE
NCT	P.K. Arora		27.3.96

TYPE OF PRODUCT: ST K30-16 GIPCL/SINDAL
COMP. DRG. NO.: 9·101·07·62003
DESIGN ORDER NO: NC/ST-JG/F/908
M/C TOOL TYPE: V. BORER
REFER DRG NO. R6300-0853
MODEL NO. 2.472

BHARAT HEAVY ELECTRICALS LTD.
HARDWARE

	NAME	SIGN	DATE
DRN.	RAMADHAR		
CHD	BINOD		25.3.96
APPD	SMI/APA		28.3.96

DEPT. JTE | CODE 209 | SCALE 1:1 | WEIGHT (KG) ~12.00 | REF. TO ASSY. DRG. – | ITEM No. – | No. OF ITEMS

TITLE : R.H. CASSETTE 40X40

CARD CODE | DRAWING No. R6300 - 0965 | REV | SHEET NO. | NO. OF SHEETS

SIZE A1

REV	DATE	ALTERED / CHECKED	ZONE

REF. DRG. No. | SIGN & DATE 28.3.96 | INVENTORY No. 1-10007

COPYRIGHT AND CONFIDENTIAL
This information is the property of BHARAT HEAVY ELECTRICALS LIMITED. It must not be used directly or indirectly in any way detrimental to the interests of the Company.

SITE_00

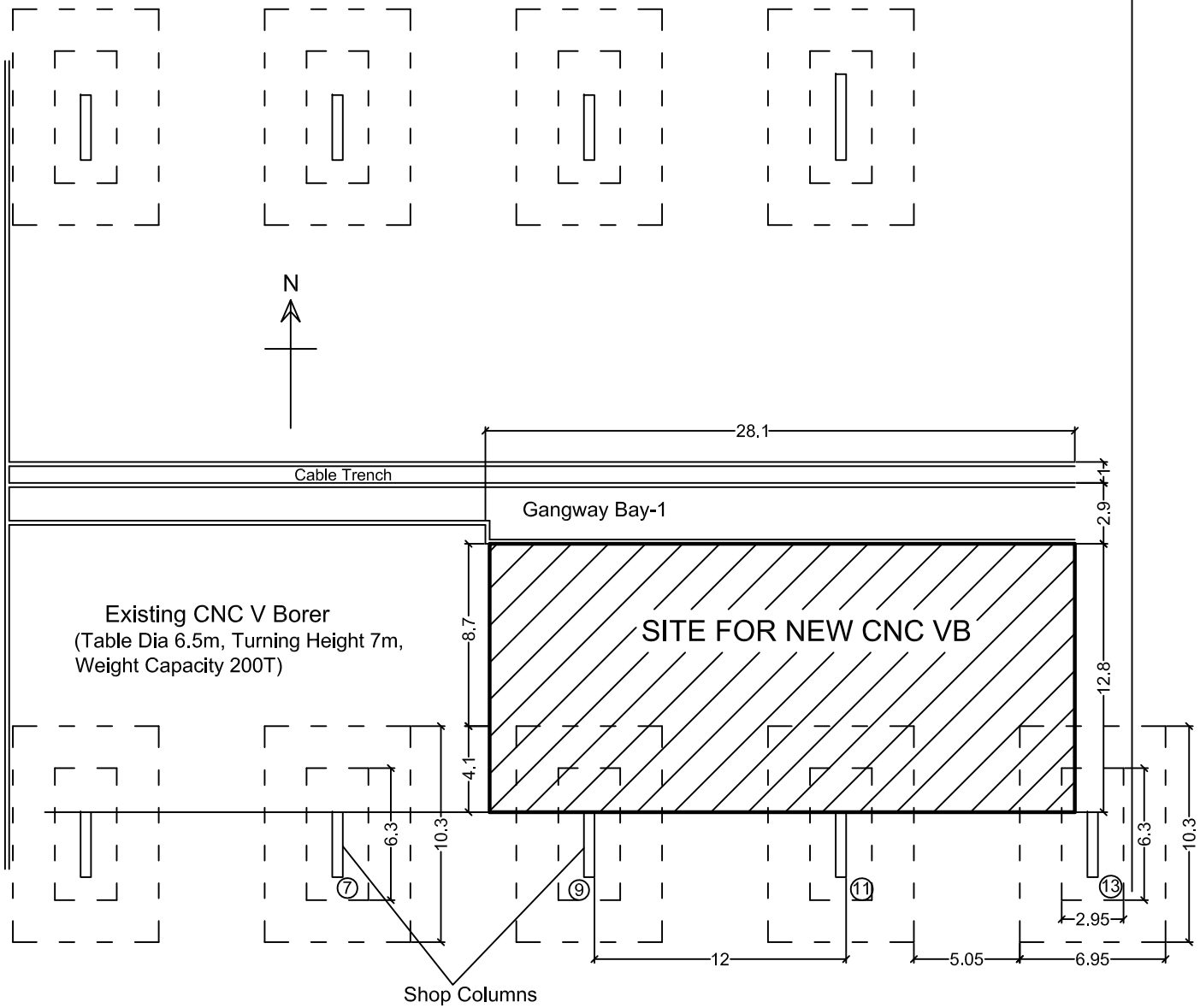

Shop Column

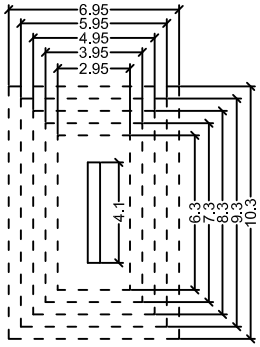

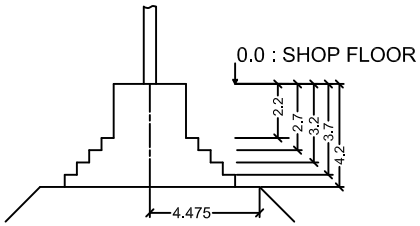

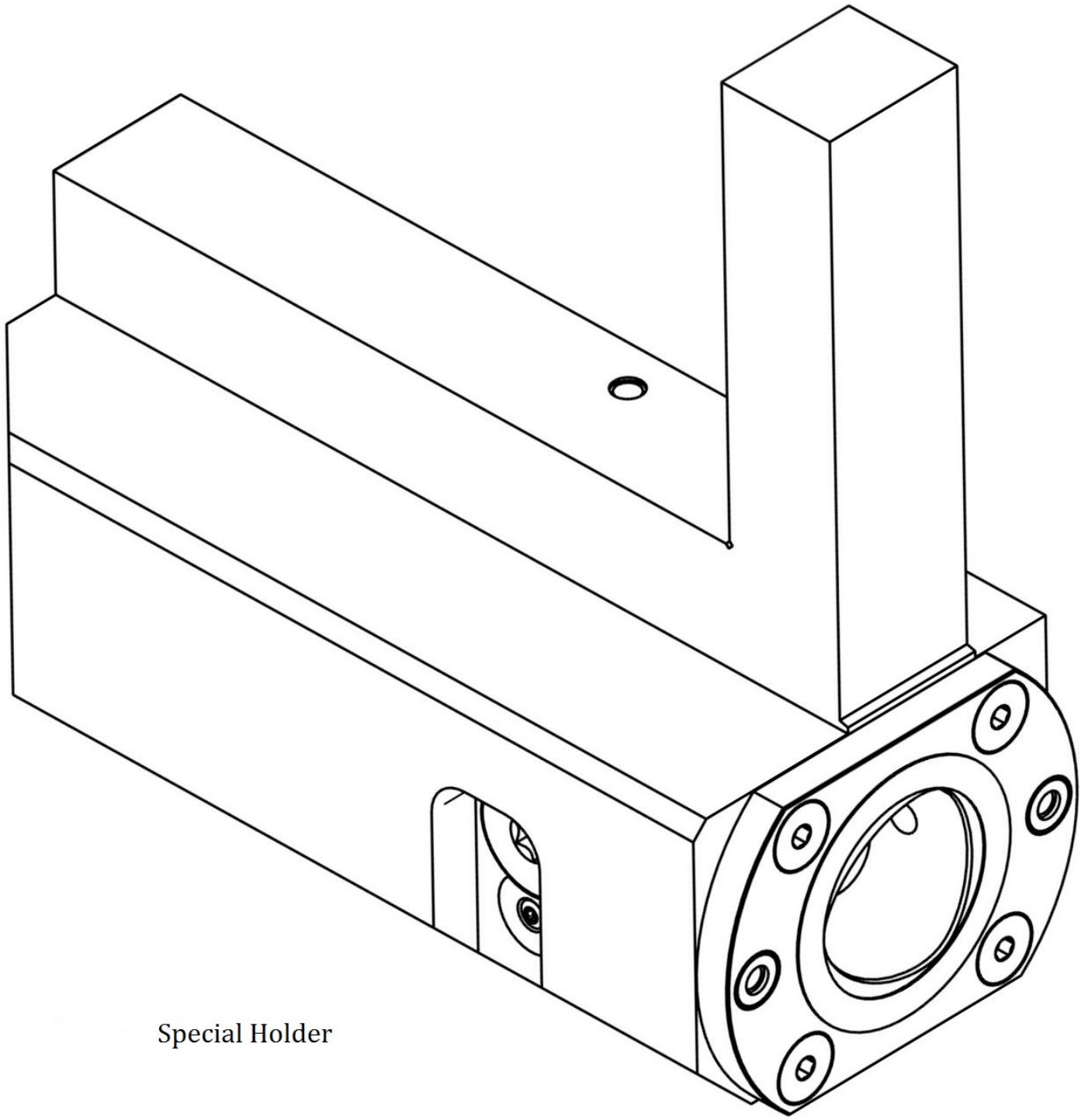

Special Holder

INTERIM REPORT

GEOTECHNICAL INVESTIGATIONS FOR THE FOUNDATION OF CNC VERTICAL BORING MACHINE, BLOCK-3, BHEL, HARIDWAR

Sponsored By
Bharat Heavy Electricals Limited (BHEL)
Haridwar, Uttaranchal

Geotechnical Engineering Division
CENTRAL BUILDING RESEARCH INSTITUTE
ROORKEE - 247 667 (UTTARANCHAL)

January, 2003

1.0 PRELUDE

BHEL, Haridwar vide their faxed letter dated 10.10.2002 had desired to carryout the geotechnical investigations for their proposed foundation of CNC Vertical Boring Machine in Block – 3 by CBRI. Subsequently, two separate proposals, anticipating two different types of deposits, option - 1 with soil deposit and option - 2 with boulder deposits were submitted to BHEL on 11.10.2002. In continuation, Shri Arun Kumar, Manager (Civil), BHEL visited CBRI and had discussions on the scope of work as required by their design engineer. Finally, CBRI Scientists visited the site on 25.10.2002 and had discussions with BHEL officials. As desired, a proposal was submitted on 28.10.2002 vide letter no. GE/TECH/2002 considering soil deposit as mentioned in option -1 with following scope of work:

2.0 SCOPE OF WORK

1. Drilling of bore hole at one location including Standard Penetration Test (SPT) at every 1.5m interval and at locations wherever strata changes, up to 15m or refusal, whichever occurred earlier.
2. Collection of Undisturbed and Disturbed Soil Samples at regular interval of 1.5m depth and wherever strata changes to prepare bore log.
3. Laboratory investigations on collected soil samples to determine relevant physical and engineering properties such as moisture content, density, grain size analysis, Atterberg's limits, differential free swell, shear strength parameters i.e. cohesion & angle of internal friction and consolidation characteristics.
4. Data analysis for the assessment of safe & allowable bearing capacity of foundation soil from shear and settlement criteria.
5. Submission of report.

3.0 DRILLING OF BORE-HOLE

The drilling of bore-hole by Mobile Rig started on 06.12.2002 and reached upto a depth of 4.20m on 08.12.2002 as shown in Photo 1 & 2. The water table was much below 15 m depth as per the report shown by BHEL officials on ground water investigation

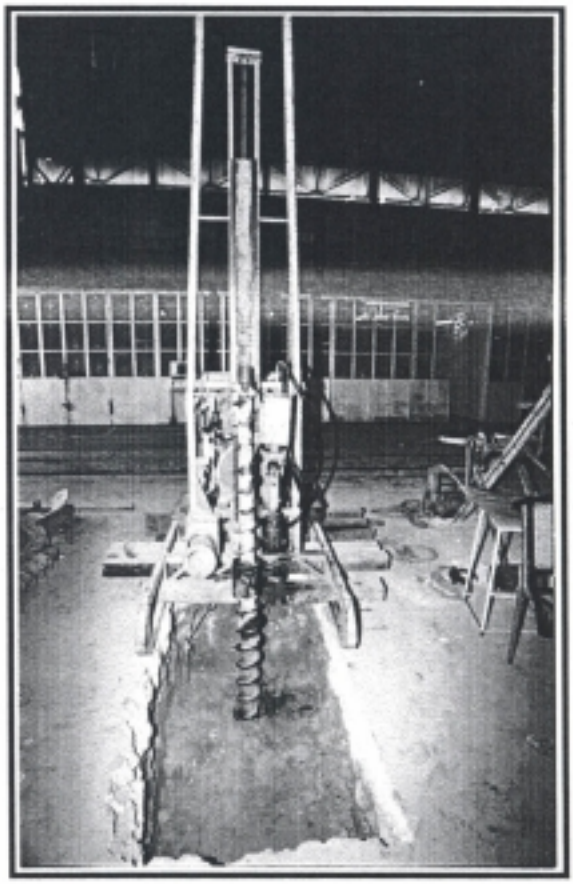

Photo 1: A View of B-24 Rig in Operation

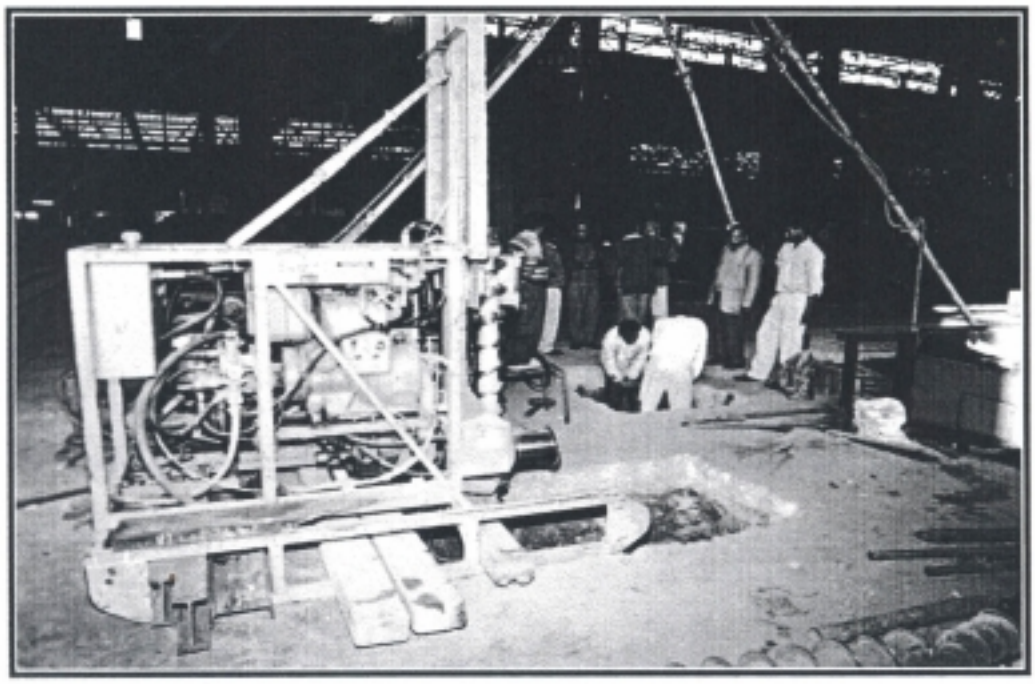

Photo 2: A Close-up View of B-24 Rig in Operation

conducted by NRDCS Limited New Delhi in March 2000. Hence, drilling by continuous augering was considered appropriate without using water. The standard penetration tests (SPT) at 0.75, 2.25 and 3.00 m depth were conducted and undisturbed sample from 1.50 m depth was collected. The sample at 3.00 m depth could not be procured due to the presence of sandy strata with gravel in the matrix of the soil. It was confirmed with the damage of one tube sampler and soil collected from the depth which was mixed with varying sizes of gravel & cobble. The repeated trials were made throughout the day on 8th Dec. 2002 and for another full day on 9th Dec., 2002 but could not drill beyond 4.20 m depth due to the presence of gravel and boulders.

The drilling at second location (by rig) and third location (manually) were then tried and the same position of refusal were found at both the locations (Photo 3 & 4). All these three locations were in Block-3 at the proposed foundation of CNC Vertical Boring Machine and covering the area of about 12-15 m^2.

The boulder deposits were encountered at 4.2 m depth and hence, further drilling was not possible in such strata. The required bore-log could only be possible by open pit excavation. It was not possible to excavate the examination pit at the proposed foundation location at this stage due to prevailing site conditions. Hence, it was decided to collect the disturbed soil samples from the nearby pit excavated upto 5 m depth for the construction of CNC lathe machine in the same block. The bore-log has been prepared and presented in Fig. 1 and grain size distribution curves in Figs. 2 to 5. The coefficient of uniformity (C_u) and curvature (C_c) used to classify the soil type as per IS: 1498-1981 have also been presented in Fig. 1.

The soil deposit at CNC lathe machine location was analysed as silty sand with scattered gravel at 2 m depth followed by poorly graded sand upto 3.3 m overlaid on a poorly graded gravel boulder deposit upto 4.6 m depth and then with poorly graded sand with gravel. Photos 5 & 6 also indicate the similar strata.

Photo 3: A view of Drilling Bore Hole in operation Manually

Photo 4: A View of Extraction of Helical Auger from Bore Hole

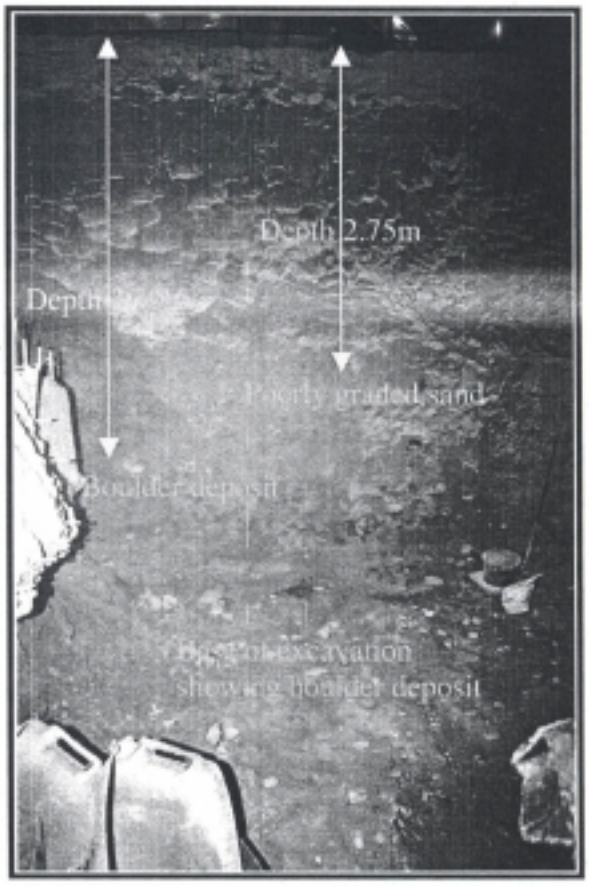

Photo 5: A View of Excavation in Progress for CNC Lathe in Block - 3

Photo 6: A Close–up View of Boulder Deposit

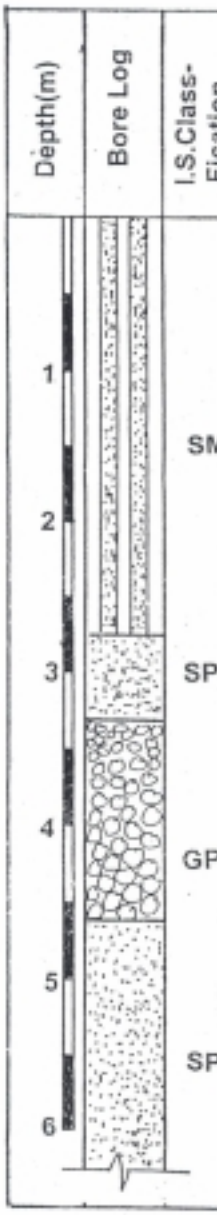

Depth(m)	Bore Log	I.S.Class-Fication	Grain Size Analysis						Cofficient of Uniformity- Cu	Cofficient of Curveture- Cc
			Boulder	Cobble	Gravel	Sand	Silt	Clay		
1–2		SM	—	—	25	60	15	—	13.3	4.5
2–3		SP	—	—	16	82	2	—	2.3	0.92
3–4		GP	5	21	48	26	—	—	16.9	6.46
4–6		SP	—	—	9	88	3	—	2.2	1.02

Fig. 1 : Sub-Soil Characteristics, Block-3

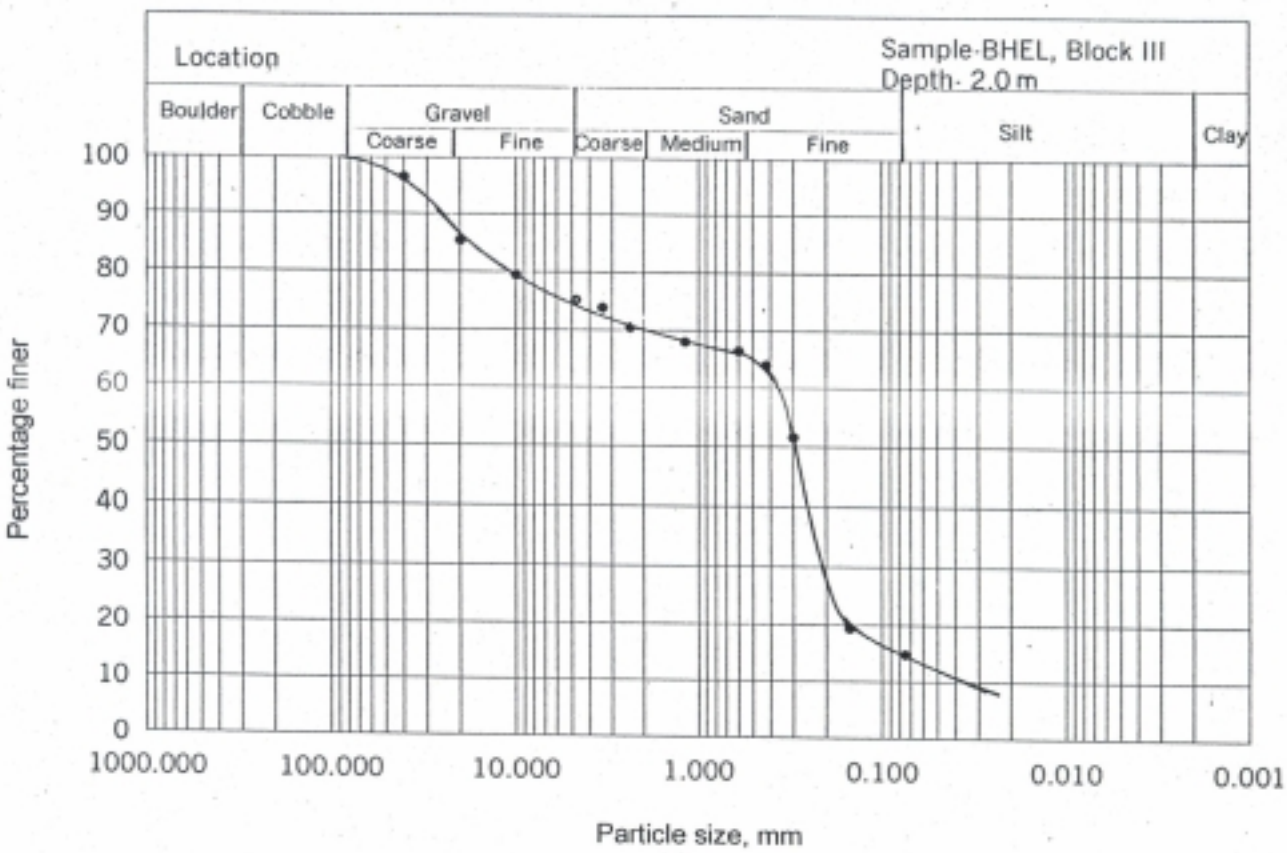

FIG.: 2 PARTICLE SIZE DISTRIBUTION CURVE

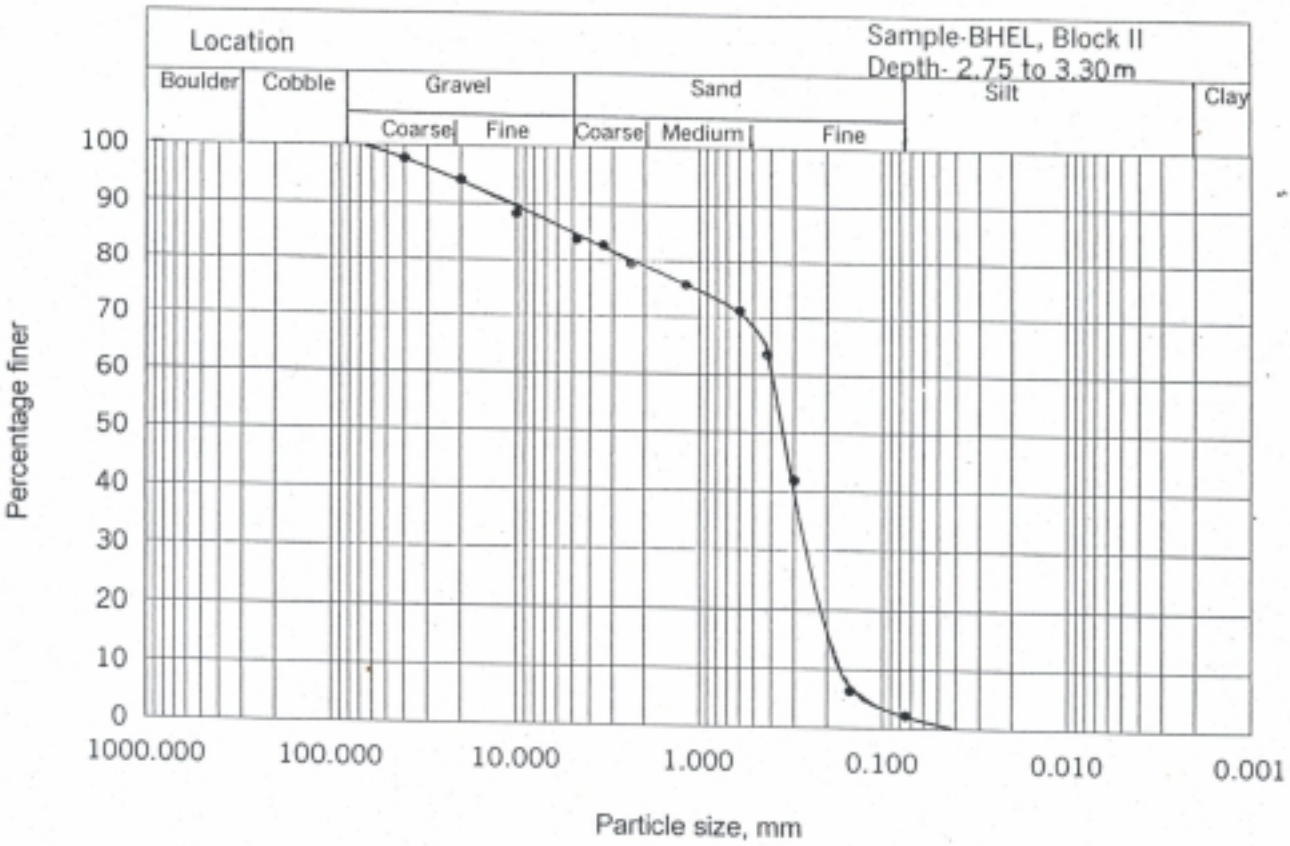

FIG.: 3 PARTICLE SIZE DISTRIBUTION CURVE

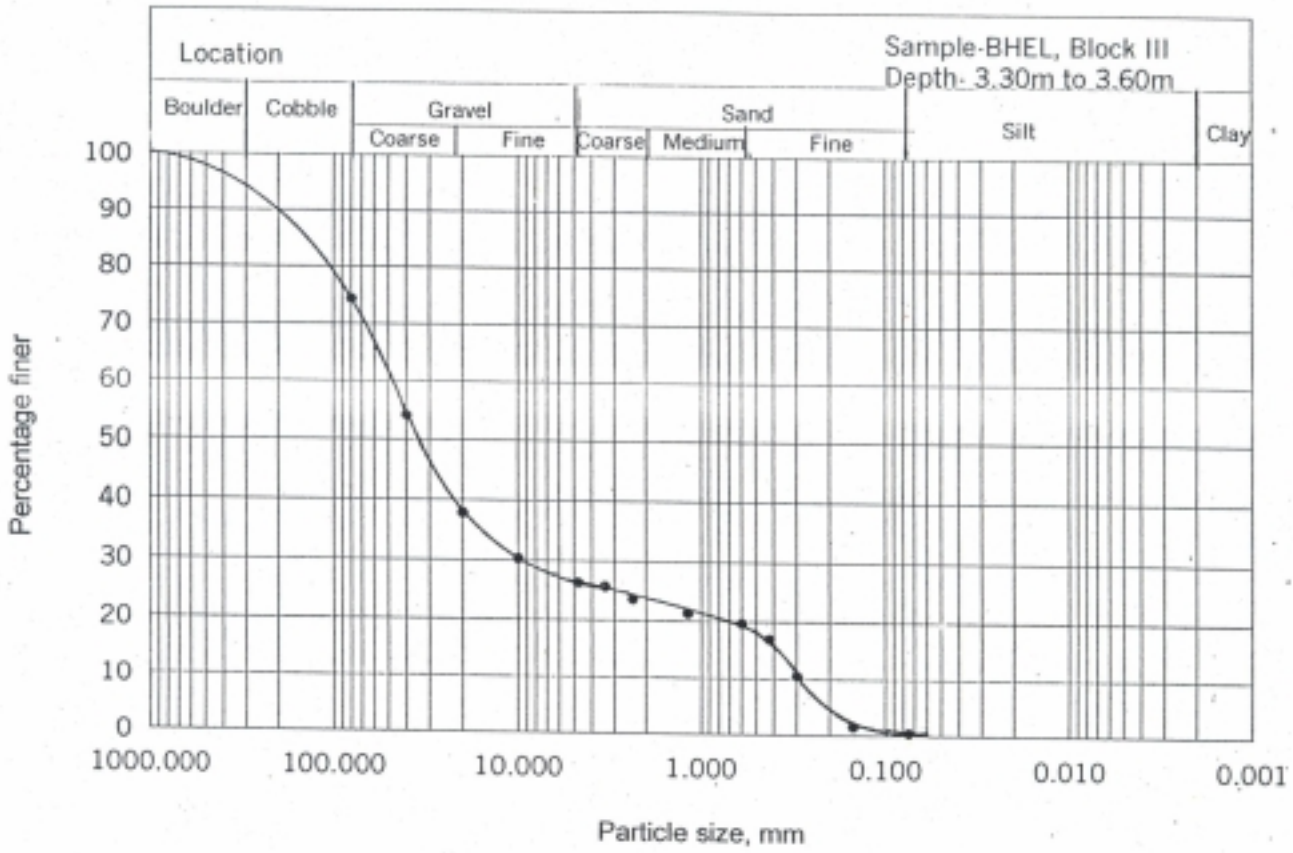

FIG.: 4 PARTICLE SIZE DISTRIBUTION CURVE

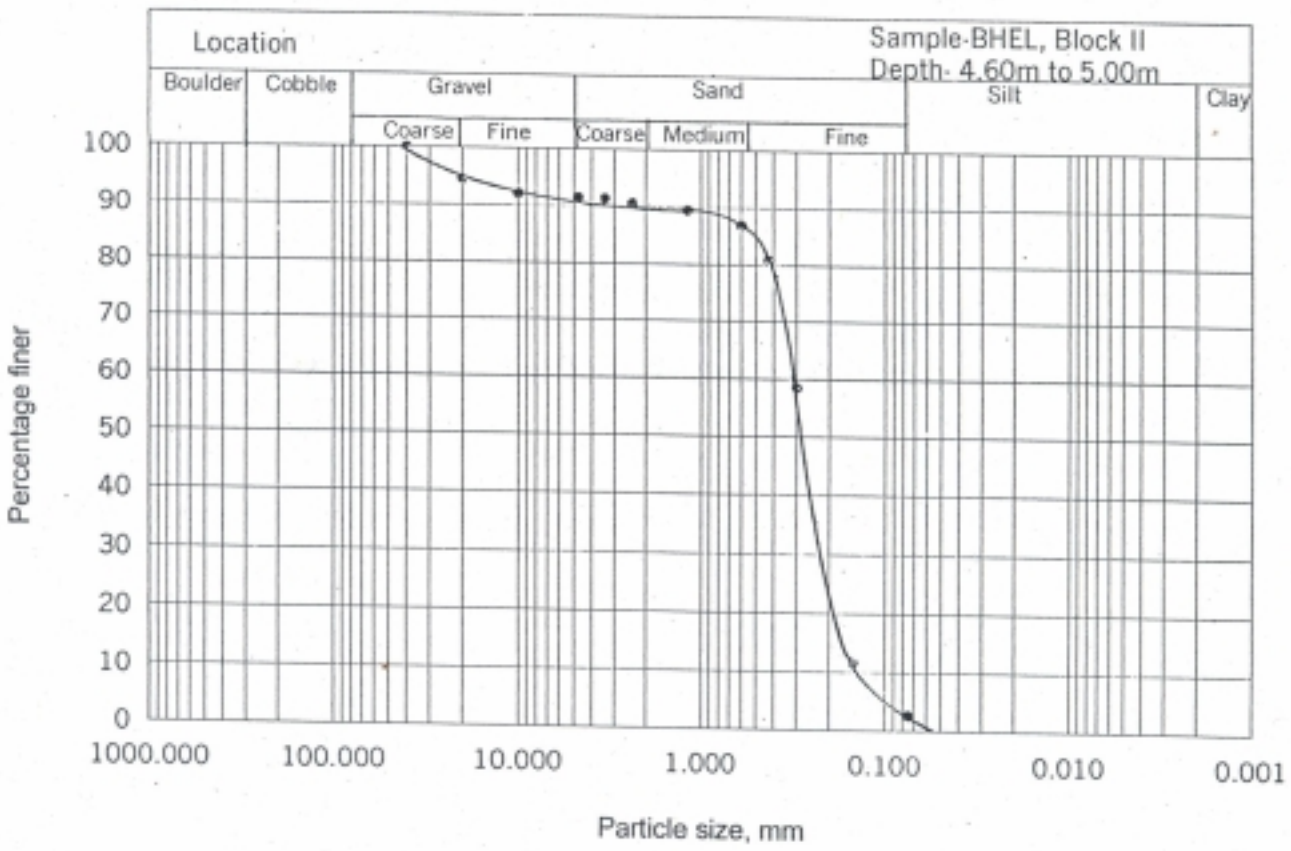

FIG.: 5 PARTICLE SIZE DISTRIBUTION CURVE

The soil strata also confirms the similar type of deposit at CNC Vertical boring machine location in Block - 3, which is further confirmed by the dynamic cone penetration tests described as follows.

4.0 DYNAMIC CONE PENETRATION TEST (DCPT)

The soil strata at 4.20 m depth seemed to be boulder deposit due to refusal in drilling both by mechanical and manual drilling both. Therefore, it was decided to conduct dynamic cone penetration tests at two different locations to evaluate Bearing Capacity, Angle of Internal Friction and Coefficient of Elastic Uniform Compression (C_u). The DCPT tests were conducted at two locations for which curves have been shown in Figs. 6 to 8, which confirmed that the strata beyond 4.20 m depth was boulder deposit upto refusal i.e. 5.10 m depth.

5.0 DATA ANALYSIS

1. Computation of Angle of Internal Friction.
2. Computation of Bearing Capacity, Shear Consideration
3. Computation of Bearing Capacity, Settlement Consideration
4. Computation Coefficient of Elastic Uniform Compression

5.1 Computation of Angle of Internal Friction (Refer Figs. 6 to 8)

The DCPT (N_c) obtained as 28.

$N_{SPT} = 28 / 1.75 = 16$

Assuming $\gamma_b = 1.6$ t/m^3

The overburden pressure at 4.2 m depth (σ_0) = 1.6 x 4.2 = 6.72 t/m^2

The overburden correction factor = 1.1 (P.H.T. 1974) corresponding to N = 16

$N_{corrected} = 1.1 \times 16 = 17.6 \approx$ Say 17

Silt correction has not been applied as water table not encountered at this depth.

Angle of Internal Friction (Ø) = 32°, obtained from relationship plot between N and Ø (P.H.T. - 1974)

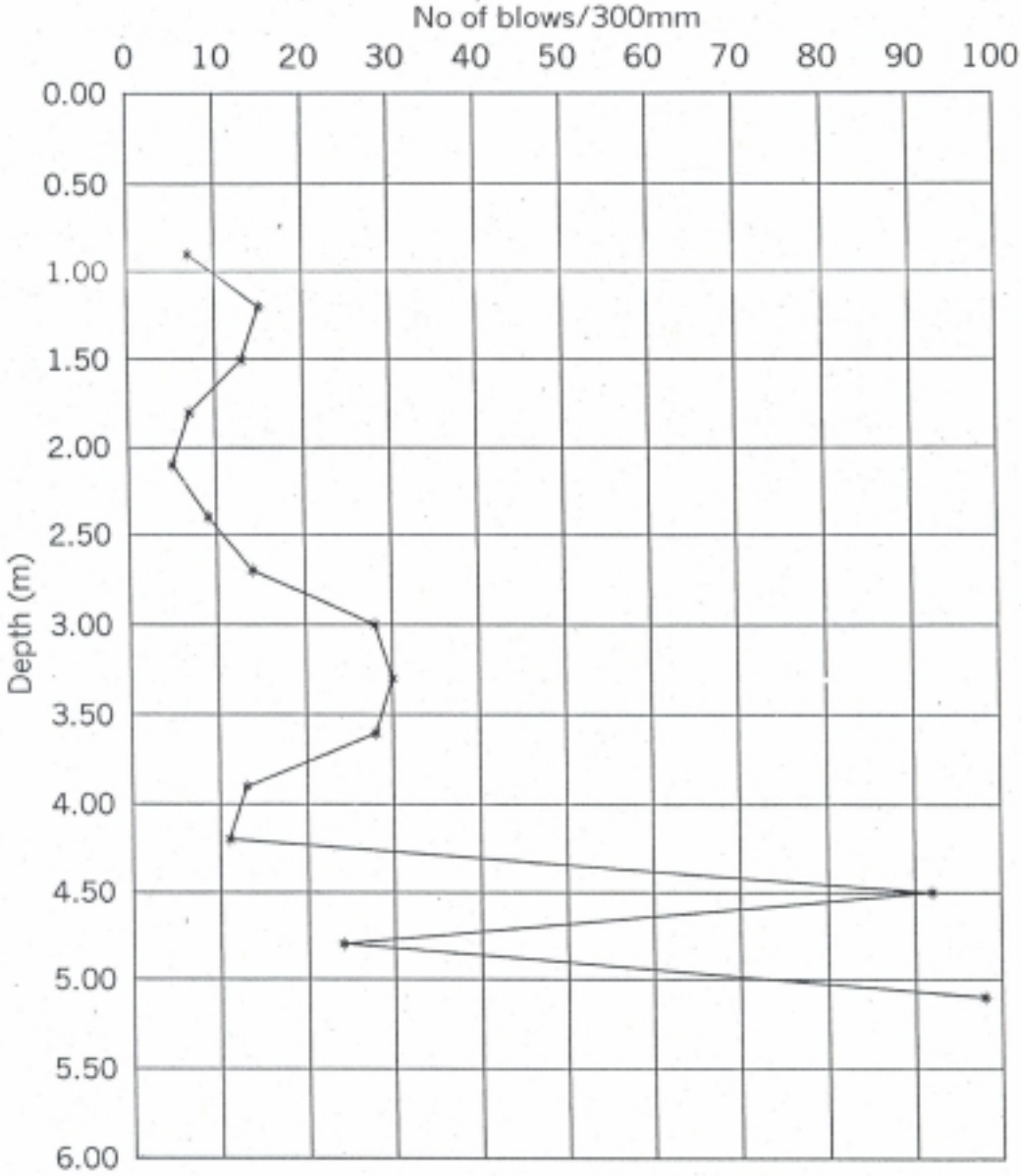

Fig. 6 : Dynamic Cone Penetration Test, Location-1 (Block-3)

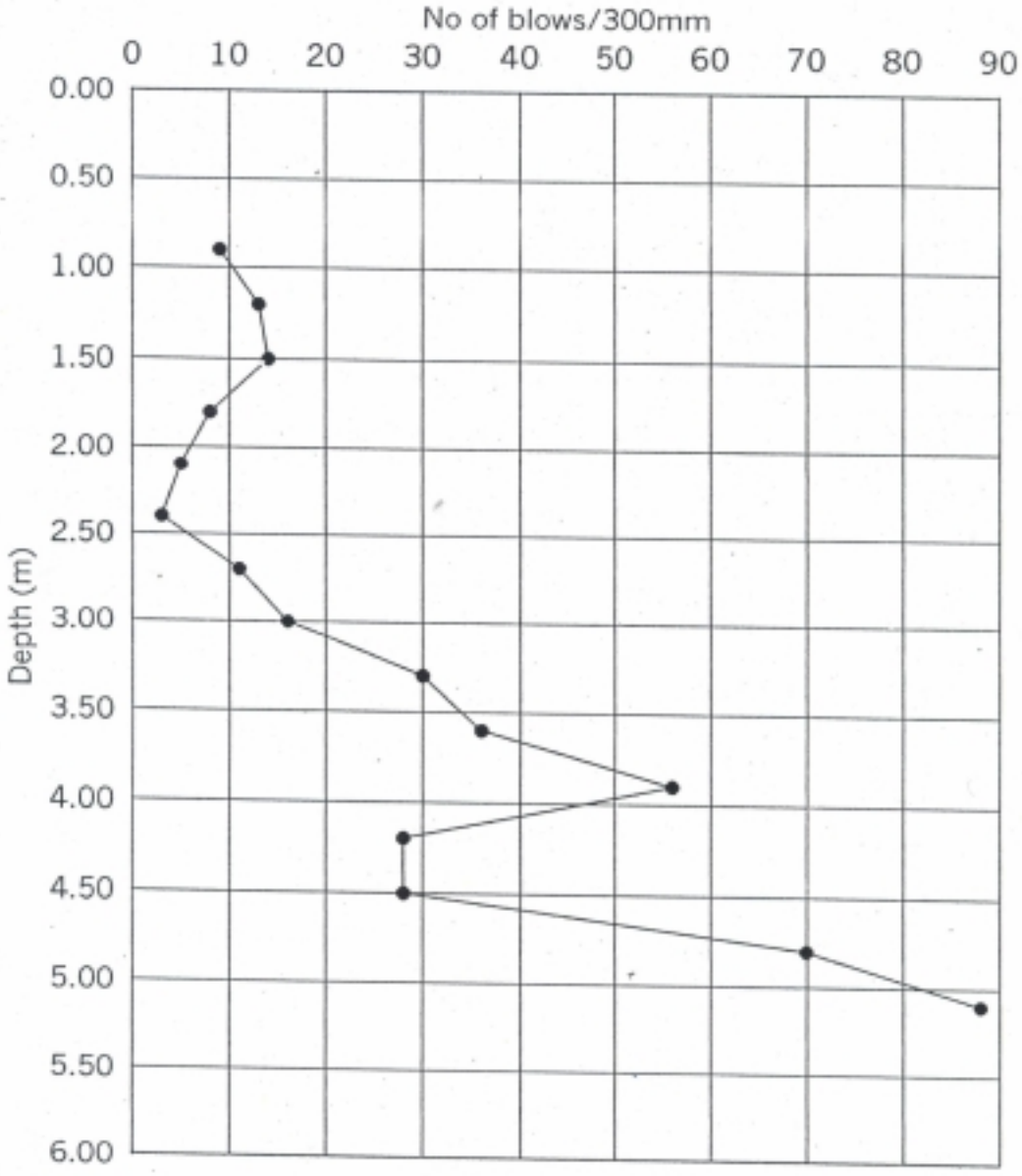

Fig. 7 : Dynamic Cone Penetration Test, Location-2 (Block-3)

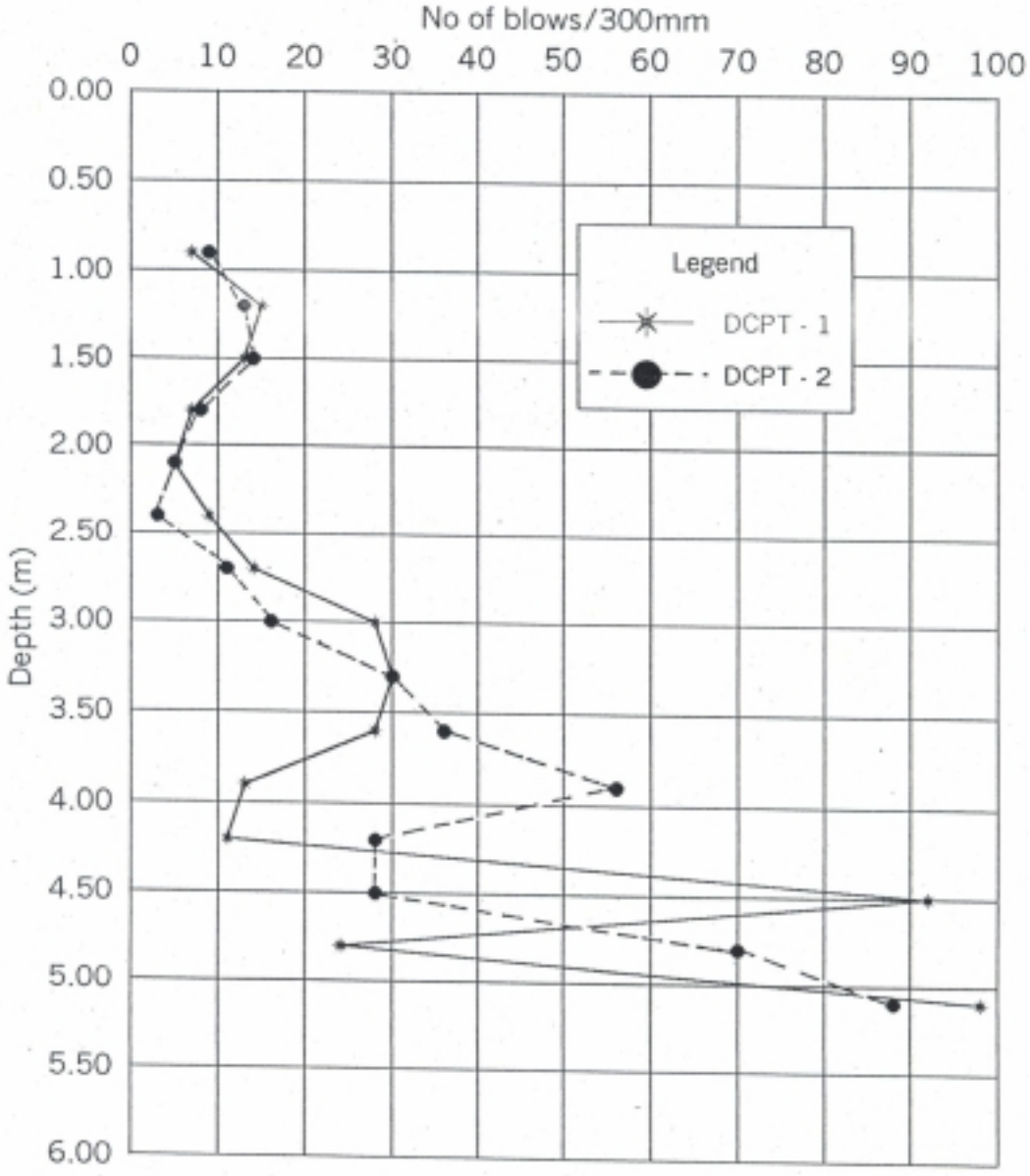

Fig. 8 : Dynamic Cone Penetration Test, Block-3 Combined for both Locations

5.2 Computation of Bearing Capacity (Shear Consideration)

The value of angle of internal friction (Ø) is obtained as 32°, which lies between 28.5° and 36° (Singh, and Prakash, S. 1982), hence to obtain bearing capacity factors, linear interpolation has been made considering failure between general and local shear.

For Ø = 32°,

$$Ø' = \tan^{-1}(\frac{2}{3}\tan 32°) = 22.71° \approx \text{Say } 22.7°$$

Table 1 : Calculation for corresponding Bearing Capacity Factor N_q and $N\gamma$

Bearing Capacity Factor	For Ø = 32°	For Ø' = 22.7°	Interpolated Values
N_q	24.36	8.70	$8.70 + \frac{(24.36 - 8.70)(32 - 28.5)}{(36 - 28.5)} = 16.00$
$N\gamma$	32.65	8.35	$8.35 + \frac{(32.65 - 8.35)(32 - 28.5)}{(36 - 28.5)} = 19.69$

Assuming size of footing, width (B) = 4.00 m and length (L) = 6.00 m

Shape Factors

$$S_q = 1 + 0.2\frac{B}{L} = 1.13$$

$$S_\gamma = 1 - 0.4\frac{B}{L} = 0.73$$

Depth Factors

$$d_q = d_\gamma = 1 + 0.1\frac{D}{B}\sqrt{N_\phi}$$

$$= 1 + 0.1\frac{4.2}{4.0}\sqrt{\tan^2(45 + \frac{32}{2})} = 1.19$$

Inclination Factor

$i_q = i_\gamma = 1$ By assuming vertical loading

Ultimate Bearing Capacity

$q_{ult} = \gamma . D_f . (N_q - 1) . S_q . d_q . i_q + 0.5 B . \gamma . N_\gamma . S_\gamma . d_\gamma . i_\gamma$

$= \{1.6 \times 4.2 (16-1) \times 1.13 \times 1.19 \times 1\} + \{0.5 \times 4.0 \times 1.6 \times 19.69 \times 0.73 \times 1.19 \times 1\}$

$= 135.55 + 54.74$

$= 190.29 \text{ t/m}^2$

$q_{safe} = q_{ult} / F.S.$

$= 190.29/3 = 63.43 \text{ t/m}^2$

5.3 Computation of Bearing Capacity (Settlement Consideration)

For $N_{corrected}$ 17 and width of footing 4m, the q_{allow} is 10 t/m^2 corresponding to a settlement of 18 mm, obtained from the figure of Settlement per Unit Pressure versus Standard Penetration Test Value, IS: 8009 (Part I) - 1981.

Hence, q_{allow} = 11.11 t/m^2 corresponding to 20 mm settlement. The allowable bearing capacity can be modified depending upon the size of footing and allowable settlement.

As evident from the above calculations, the safe bearing capacity from shear consideration is 63.43 t/m^2 and from settlement considerations is 11.11 t/m^2. Hence, the lower value obtained from settlement consideration is recommended for the design of proposed foundation.

The gross allowable value at 4.2 m depth for a size of footing 4m x 6m is as :

$q_{gross} = q_{allow} + \gamma . D$

$= 11.11 + 1.6 \times 4.2 = 17.83 \text{ t/m}^2$

However gross value of bearing capacity, 17 t/m^2 may be adopted.

5.4 Computation of Coefficient of Elastic Uniform Compression (C_u)

The soil strata as per DCPT results (Figs. 6 to 8) represents medium dense cohesionless soil deposits having Dynamic Cone Penetration Test Value (N_c), 28 and corresponding corrected SPT value 17. The Coefficient of Elastic Uniform Compression (C_u), for the

soil of medium dense in nature ranging between 3-5 Kg/cm^3, for 10 m^2 foundation contact area or more.

The value of C_u is recommended 3.0 Kg/cm^3 for design of machine foundation.

6.0 CONCLUSION

1. The value of allowable bearing capacity may be adopted as 11 t/m^2 (Lowest obtained from shear and settlement criteria at 4.2 m depth). The gross value of bearing capacity may be adopted as 17 t/m^2 for an ssumed footing size of 4m x 6m at a depth of 4.2m.

2. The value of Angle of Internal Friction (Ø) may be adopted as 32° at 4.2m depth.

3. The Coefficient of Elastic Uniform Compression (C_u) may be adopted as 3.0 Kg/cm^3 at 4.2m depth for 10 m^2 or more contact area of foundation.

4. Foundation should be placed at a depth of 4m or at the bed of boulder deposit.