FIRST ANGLE PROJECTION

(ALL DIMENSIONS ARE IN mm)

DRG. NO.

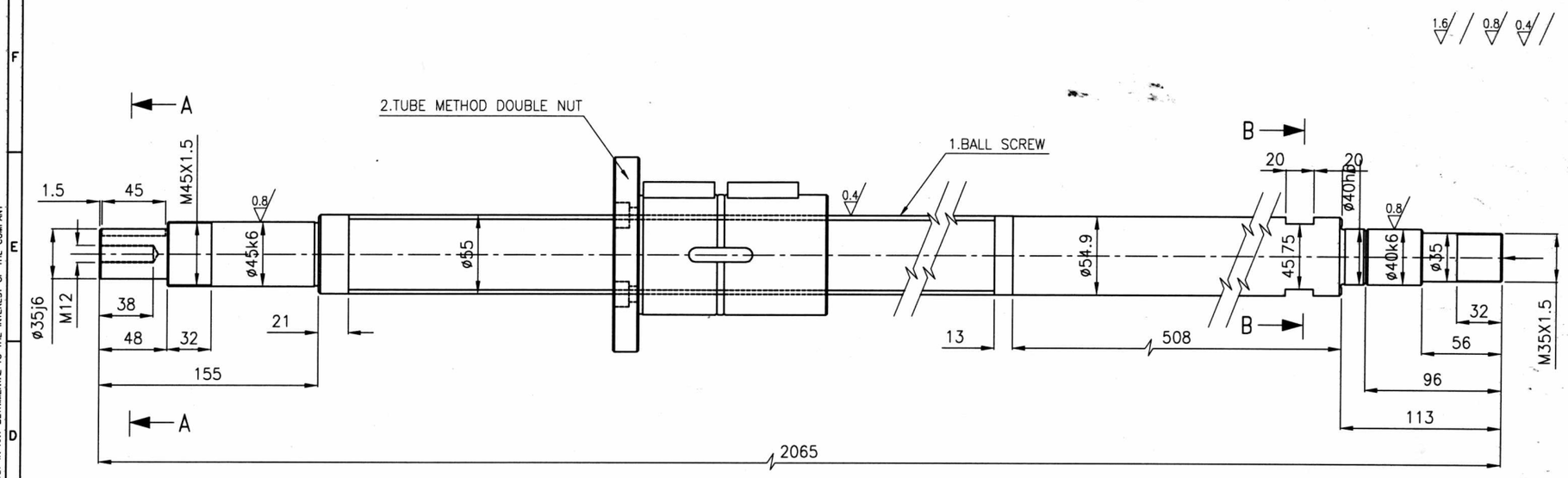

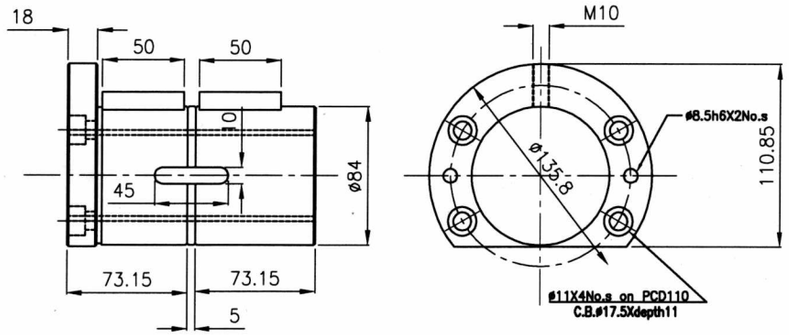

TUBE METHOD DOUBLE NUT

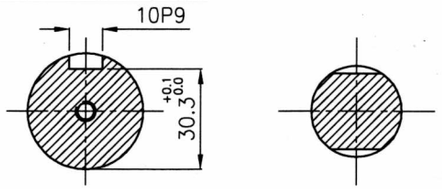

SEC-AA
(SCALE 1:1)

SEC-BB

NOTE:-

PRECISION BALL SCREW SPECIFICATION
NUT SHAPE AS SHOWN
SHAFT OD ø55
LEAD = 10
BALL DIA = ø6.27
HAND = R.H.
CIRCUITSXTURNS/NUT = 1X3.5
AXIAL PLAY DESIGNATION 0-0.01(G1)
ACCURACY DESIGNATION:
VARIATION 0.5/300/C1

-ALL CHAMFERS ARE 1X45°
-PUNCH DRG NO ON THE COMPONENT WHILE MANUFACTURING

PART	MATERIAL	EQUI.MAT	HEAT TREATMENT	HRC
SHAFT	Cf 53	EN-9	INDUCTION HARDENING	58-60
NUT	100Cr 6	EN-31	INDUCTION HARDENING	60-62
BALL	100Cr 6	EN-31	----	62-66

DRG ONLY FOR IDENTIFICATION
NOT FOR MANUFACTURING

DESCRIPTION	MAT.SIZE	MATL. CODE / MATL. SPEN.	Gr. Wt.	Net Wt. / QTY.

NAME OF THE M/C: OKK CNC LATHE ----
S.A: Y-AXIS BALL SCREW F.No:698

BHARAT HEAVY ELECTRICALS LTD. HYDERABAD

	NAME	SIGN.	DATE	NO.OF VAR.
DRN.	NVDPRASAD		11.08.15	
CHD.	KPHLK		11.08.15	
APPD.	CS KUMAR		11.08.15	

REV.	DATE	ALTERED	CHECKED	APPD
ZONE				

DEPT. M&S DESIGNS CODE 335 | GRADE OF TOL.DIM. C/M/F | SCALE 1:2 | WEIGHT (KG) | REF. TO ASSY DRG. | ITEM NO. | NO.OF ITEMS

TITLE BALL SCREW WITH TUBE METHOD DOUBLE NUT | CARD CODE | DRAWING NO. 2-RS-2242 | REV. 00

SHEET No. 1 | NO OF SHEETS 1

THE INFORMATION ON THIS DOCUMENT IS THE PROPERTY OF BHARAT HEAVY ELECTRICALS LIMITED.
IT MUST NOT BE USED DIRECTLY OR INDIRECTLY IN ANY DETRIMENTAL TO THE INTEREST OF THE COMPANY

INVENTORY NO | SIGN. AND DATE | REF. DRG. NO.