FIRST ANGLE PROJECTION

(ALL DIMENSIONS ARE IN mm)

DRG. NO.

SH. 1 OF 1

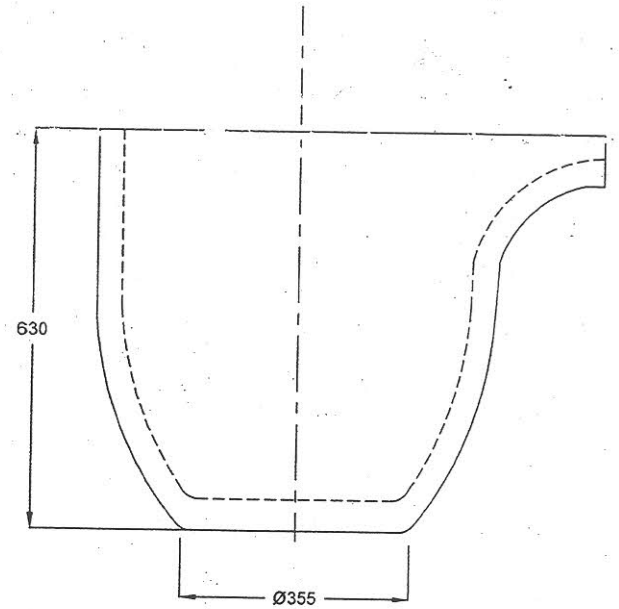

SECTION A-A

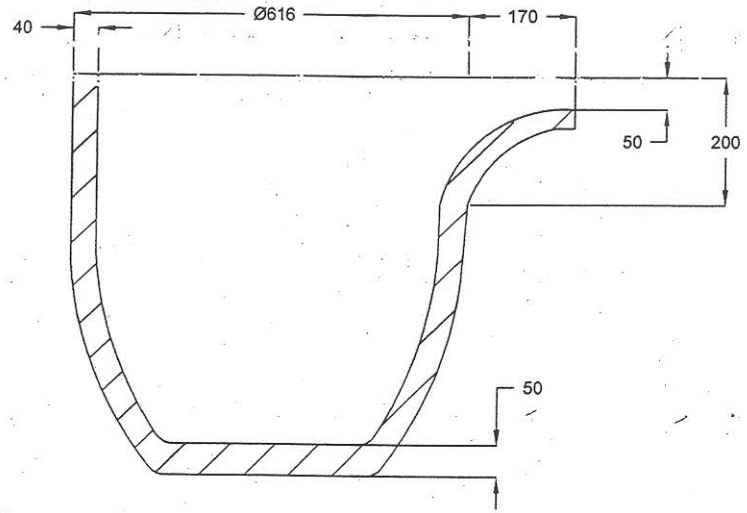

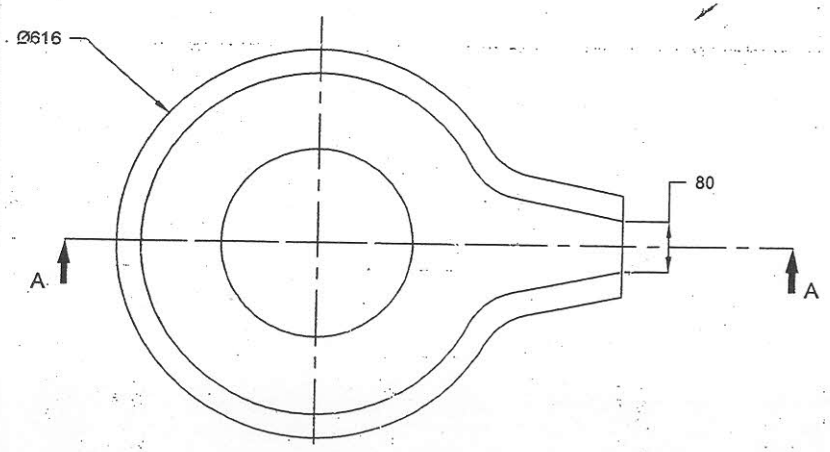

1.MATERIAL : CARBON BONDED SILICONCARBIDE CRUCIBLE AS PER AA 533 06.
2.APPLICATION : MELTING OF ALUMINIUM SILICON ALLOYS.
3.APROX.WORKING CAPACITY(ALUMINIUM) : 220 Kg
4.TOLERANCE ON THE DIMENSIONS SHOWN ABOVE IS ± 2% ON THE EXTERNAL DIMENSIONS SUBJECT TO A MAXIMUM OF 5mm SHALL BE PERMITED..

THIS DRAWING SUPERSEDES 3-05-173,ITEM NO TYPE2.

TYPE OF PRODUCT OR
NAME OF CUSTOMER/PROJECT

BHARAT HEAVY ELECTRICALS LTD.
HYDERABAD

	NAME	SIGN.	DATE	NO.OF VAR.
DRN.	V.L.NATH		16.04.14	
CHD.	ABHINAV		16.04.14	-NA-
APPD.	A.N.S			

DEPT.	UNTOL. DIMS. GR.	SCALE	WEIGHT (KG)	REF. TO ASSY. DRG.	ITEM NO.	NO.OF ITEMS
F&P CODE 204A	/C/M/F/	N.T.S	114 kg	-NA-	-NA-	-NA-

TITLE
SI - CARBIDE CRUCIBLE (TPC-387)
FOR GAS FIRED FURNACE.

CARD CODE -NA-

DRAWING NO. 3-05-352

REV. 00

SHT. No 1 NO. OF SHT. 1

REV.	DATE	ALTERED	REV.	DATE	ALTERED	REV.	DATE	ALTRD/CHD
		CHD/APPD			CHD/APPD			APPD
ZONE			ZONE			ZONE		

INVENTORY NO

SIGN. AND DATE

REF. DRG. NO.

COMPUTER FILE NAME

GENERAL DIMENSIONAL LIMITS,FITS & TOLERANCES AS PER HY0230261

THE INFORMATION ON THIS DOCUMENT IS THE PROPERTY OF BHARAT HEAVY ELECTRICALS LIMITED. IT MUST NOT BE USED DIRECTLY OR INDIRECTLY IN ANY WAY DETRIMENTAL TO THE INTEREST OF THE COMPANY