FIRST ANGLE PROJECTION

(ALL DIMENSIONS ARE IN mm)

DRG. NO. 01/01/39/2015

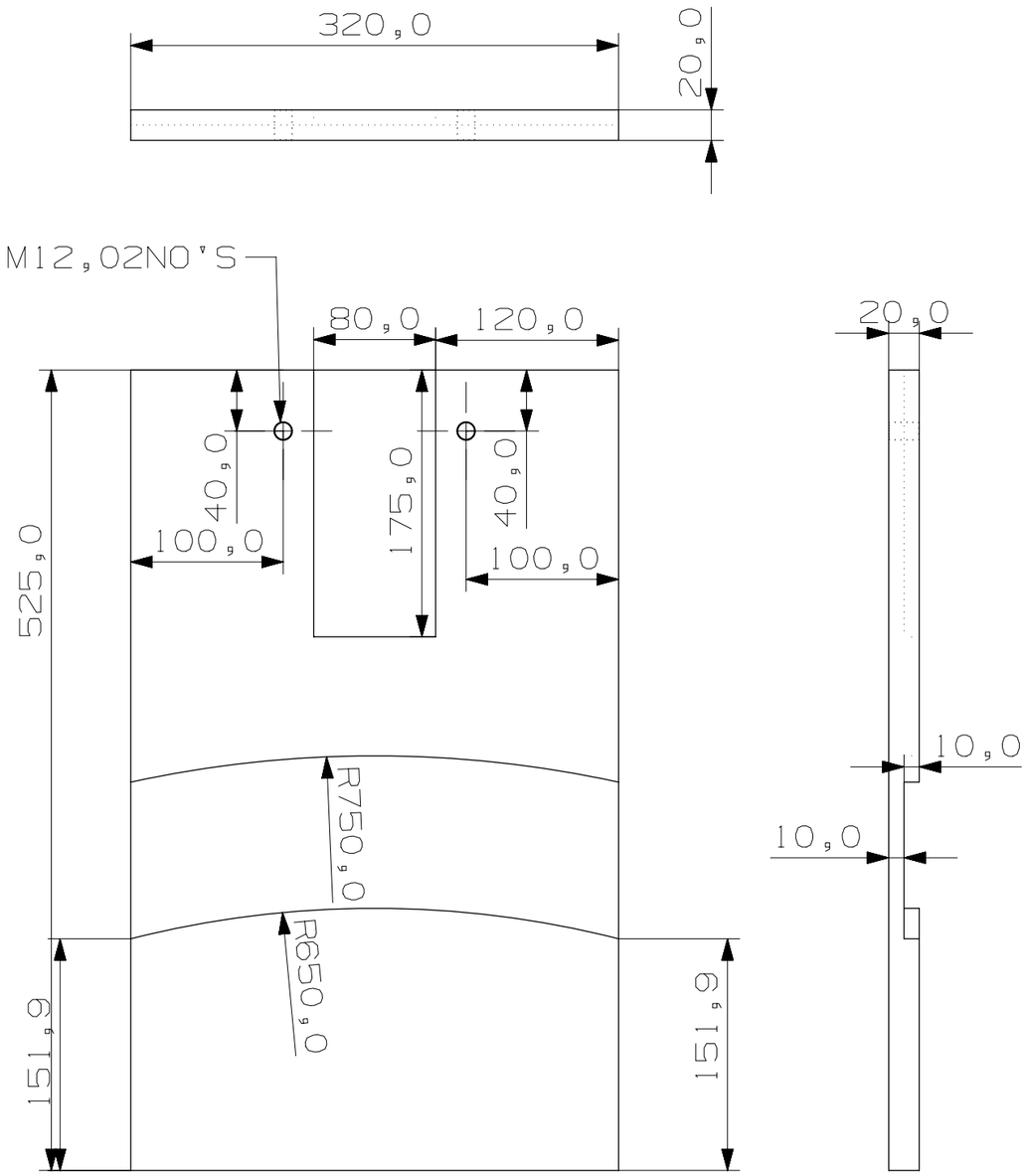

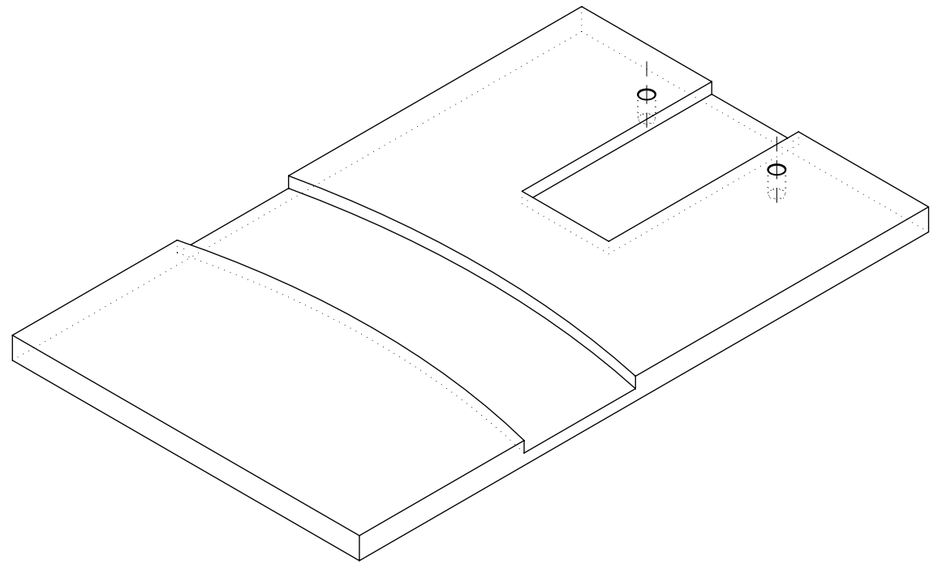

–	–		–	–
			–	–
ITEM NO	DESCRIPTION	DRAWING NO.	MATL CODE.	UNIT WT
			MATL. SPEN.	QTY

TYPE OF PRODUCT OR NAME OF CUSTOMER/PROJECT: DIE BOTTOM PLATE FOR FR05-STG2- CUTTER TEETH GT BUCKET

बीएचईएल BHEL — BHARAT HEAVY ELECTRICALS LTD. CORPORATE R&D

	NAME	SIGN.	DATE	NO.OF VAR.
DRN.	RAVINDER		12.10.15	NA
CHD.	NSSK		12.10.15	
APPD.	G MADHAVULU		12.10.15	

REV.	DATE	ALTERED	CHECKED	APPD
ZONE				

DEPT.	GRADE OF TOL.DIM.		SCALE	WEIGHT (KG)	REF. TO ASSY DRG.	ITEM NO.	NO.OF ITEMS
TDL	℄/M/#		1:4	NA		NA	NA
CODE 39							

TITLE: SCHEMATIC DIAGRAM OF Die Bottom Plate (fr05-stg2 Cutter teeth GT bucket)

CARD CODE: NA

DRAWING NO. 01/01/39/2015 — REV. NA

SHEET No. 1 — NO OF SHEETS 1

THE INFORMATION ON THIS DOCUMENT IS THE PROPERTY OF BHARAT HEAVY ELECTRICALS LIMITED.
IT MUST NOT BE USED DIRECTLY OR INDIRECTLY IN ANY WAY DETRIMENTAL TO THE INTEREST OF THE COMPANY

REF. DRG. NO.

SIGN. AND DATE

INVENTORY NO