FIRST ANGLE PROJECTION

(ALL DIMENSIONS ARE IN mm)

(~1.6)

DRG. NO. RD DG 4 35 0617 0211

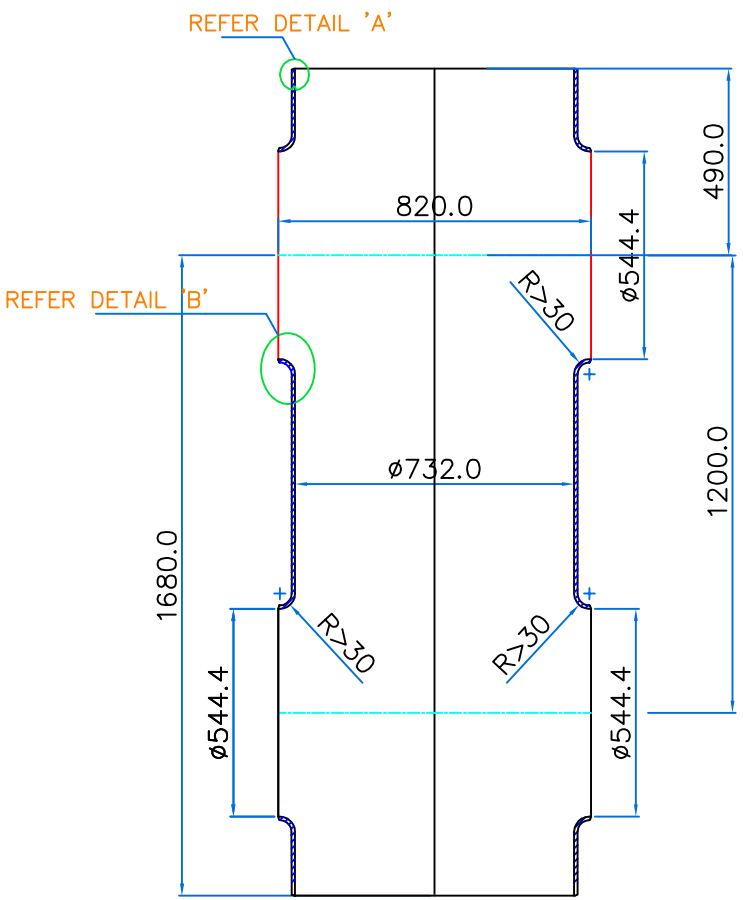


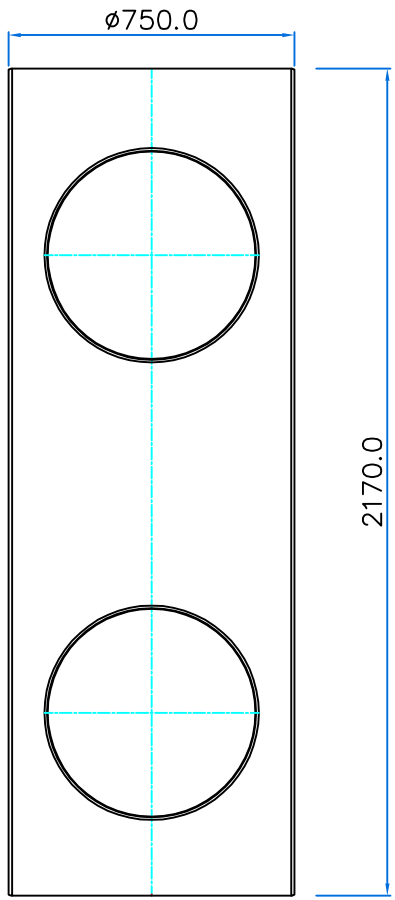


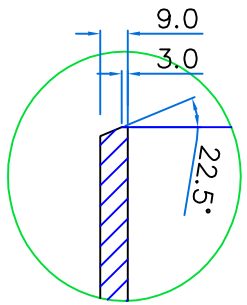


DETAIL 'A'

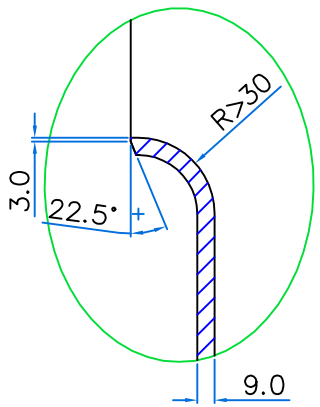


DETAIL 'B'

THE INFORMATION ON THIS DOCUMENT IS THE PROPERTY OF BHARAT HEAVY ELECTRICALS LIMITED.
IT MUST NOT BE USED DIRECTLY OR INDIRECTLY IN ANY WAY DETRIMENTAL TO THE INTEREST OF THE COMPANY.

ALL SHARP EDGES SHALL BE MACHINED TO 0.4x45°

29/05/14

| VAR.00 | REMARKS | VAR NO. | ITEM NO. | DESCRIPTION | STD | DRAWING NO. | IT.NO. VAR | MATL. CODE / MATL. SPECN. | A C | UNIT | UNIT WT. / QTY. | GS | ZONE |
|---|---|---|---|---|---|---|---|---|---|---|---|---|---|
| | | | 01 | PIPE | | RD DG 4 35 0617 0211 | | SS-304 L | | | 01 | | |

TYPE OF PRODUCT
NAME OF CUSTOMER

GSM-420

BHARAT HEAVY ELECTRICALS LTD.
HYDERABAD

| | NAME | SIGN. | DATE | NO.OF VAR. |
|---|---|---|---|---|
| DRN | | | | |
| CKD | MMRAO | | 03.11.14 | 01 |
| APPD | MMRAO | | 03.11.14 | |

| DEPT. CODE | GRADE OF TOL. DIM. C/M/F | SCALE | WEIGHT(KG) | REF. TO | ITEM NO. | NO.OF ITEMS |
|---|---|---|---|---|---|---|
| | | NTS | 300 | RD DG 4 35 0617 0210 | 1 | |

TITLE: PIPE

CARD CODE

DRAWING NO.: RD DG 4 35 0617 0211

REV.

SHEET NO. | NO. OF SHEETS

| REV. | DATE | ALTERED / CHECKED | REV. | DATE | ALTERED / CHECKED |
|---|---|---|---|---|---|
| ZONE | | | ZONE | | |

REF. DRG. NO. | SIGN. AND DATE | INVENTORY NO.