FIRST ANGLE PROJECTION

(ALL DIMENSIONS ARE IN mm)

DRG. NO. 0-101-02-62010 SH. 03 OF 21

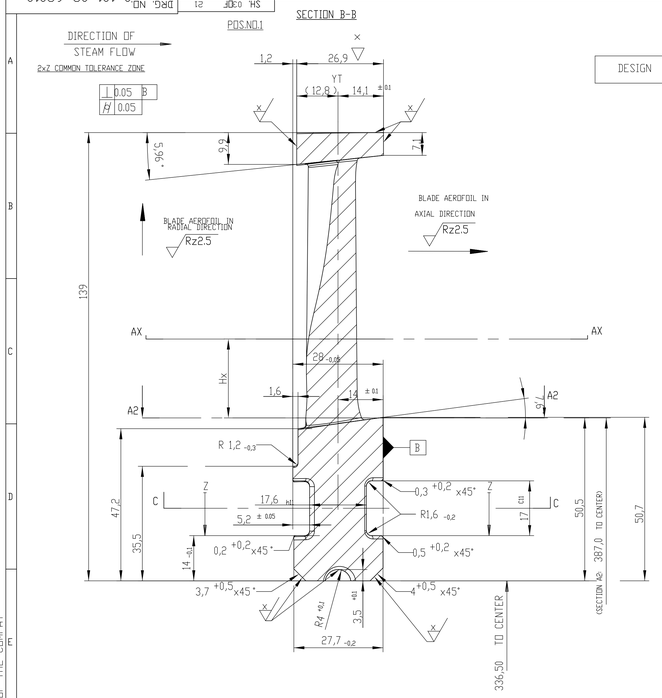

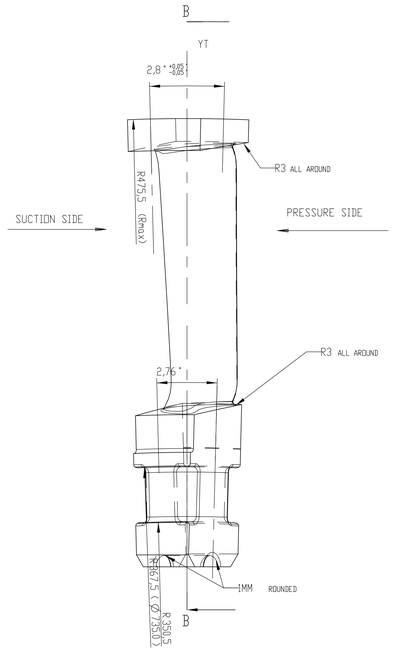

BLADE SEEN IN THE DIRECTION OF STEAM FLOW

SCHEME FOR D AND S DIMENSIONS
*) RELATED TO ADJACENT BLADE

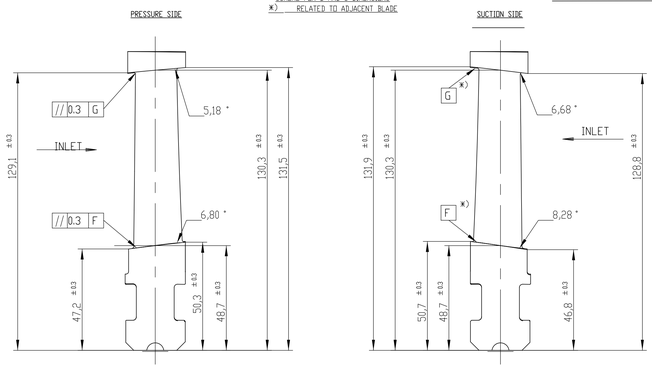

SECTION AX	Hx	Lges	AMI	UMA	RHk	BBi	D
A1 - A1	-10.0	26.94	10.11	11.86	0.12	63.05	9.61
A2 - A2	0.0	26.98	9.98	6.44	0.13	60.00	9.21
A6 - A6	12.0	27.13	9.84	5.11	0.14	56.42	8.77
A16-A16	42.0	27.98	9.54	6.81	0.15	48.29	7.66
A25-A25	69.0	29.34	9.29	8.47	0.16	42.15	6.54

LOCAL SMALLEST RADIUS OF CURVATURE ON PRESSURE SIDE: 15.0 MM

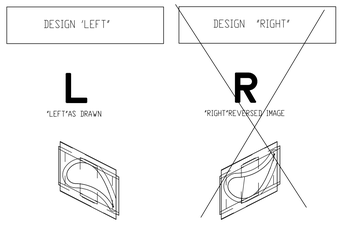

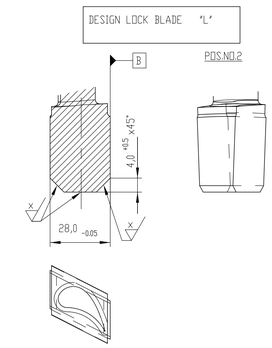

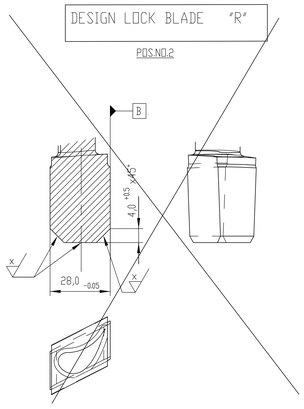

TECHNICAL REQUIREMENTS

TOLERENCES

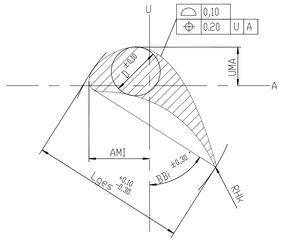

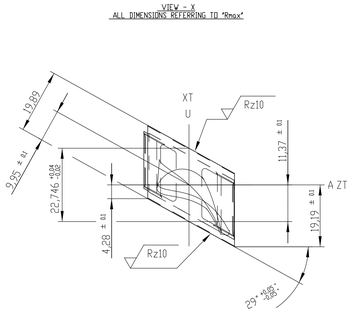

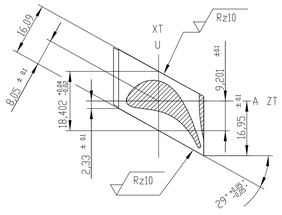

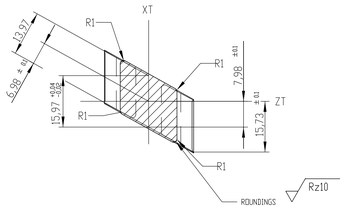

RAW PART IN POSITION OF CENTERING(WITHOUT SCALE

(RELATED TO MINIMAL DIMENSION)

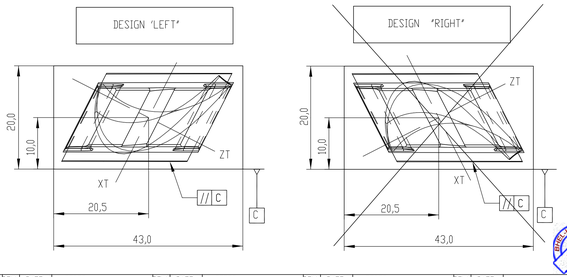

NOTES:

1. STRAK NUMBER: 80041

2. NUMBER OF BLADES/ROW: 133
(INCLUDING LOCK BLADE)

03 (LEFT)	03
ROW NO.	VAR

TYPE OF PRODUCT OR
NAME OF CUSTOMER/PROJECT

BHARAT HEAVY ELECTRICALS LTD
HYDERABAD

	NAME	DATE	NO.OF VAR.
DRN.	HEMASUNDAR	05.03.2015	
CHD.	K THRIMURTHULU	05.03.2015	-NA-
APPD.	T.S.PRABHAKAR	05.03.2015	

DEPT.	UNTOL. DIMS. GR.	SCALE	WEIGHT (KG)	REF. TO ASSY. DRG.	ITEM NO.	NO.OF ITEMS
CODE 415	C/M/F	NTS	0,19	-NA-	-NA-	-NA-

TITLE MOVING BLADE

CARD CODE -

DRAWING NO. 0-101-02-62010 REV. 00

SHT. No 03 NO. OF SHT. 21

THE INFORMATION ON THIS DOCUMENT IS THE PROPERTY OF BHARAT HEAVY ELECTRICALS LIMITED. IT MUST NOT BE USED DIRECTLY OR INDIRECTLY IN ANY WAY DETRIMENTAL TO THE INTEREST OF THE COMPAY

S-999-R28-TR139/081B4M

GENERAL DIMENSIONAL LIMITS,FITS & TOLERANCES AS PER HY0230261

COMPUTER FILE NAME T-1134

SIGN AND DATE REF. DRG. NO.

INVENTORY NO

Mar Mon 23 14:47 2015

Printed by : P SHASHANK-FM2301 / 6115381 on 13-07-16 13:18:03

This Drawing is printed from Engineering Digital Archive System (EDAS). Therefore signatures are not essentially required.