FIRST ANGLE PROJECTION

(ALL DIMENSIONS ARE IN mm)

DRG. NO. 0-101-02-62010 SH. 13OF 21

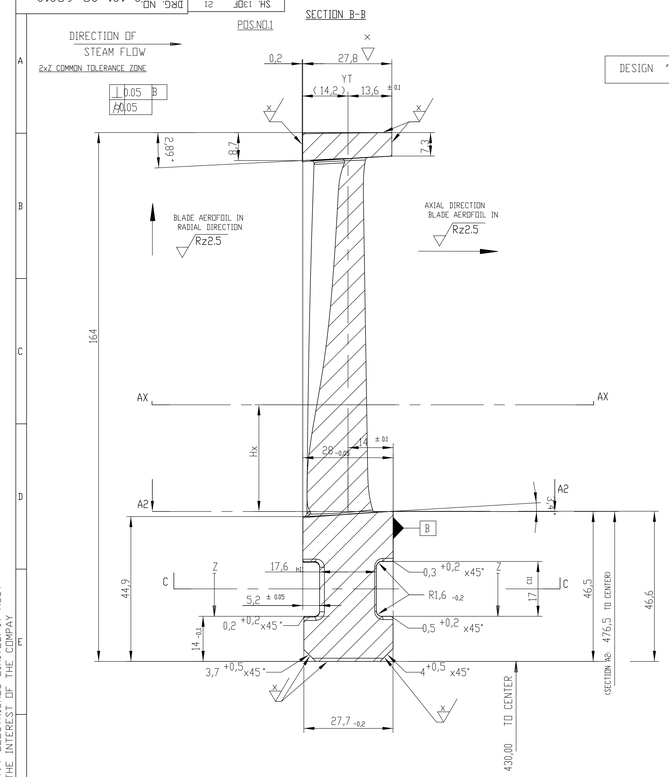

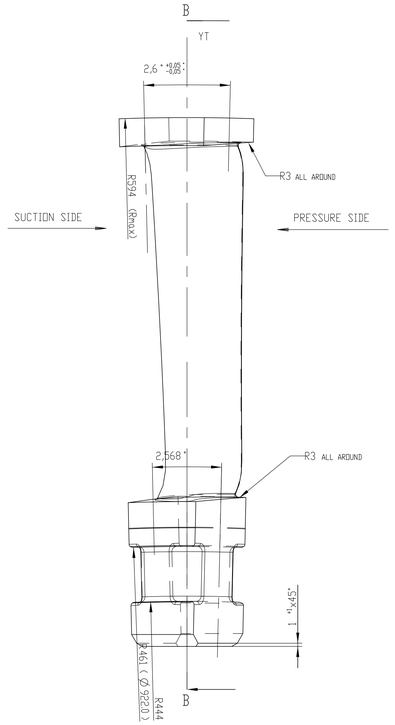

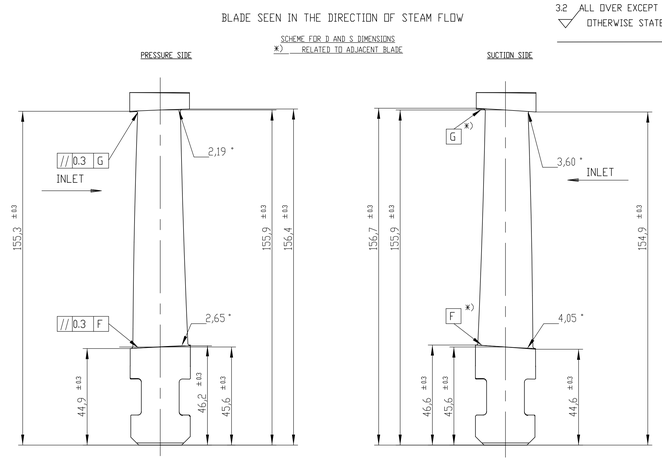

SECTION AX	Hx	Lges	AMI	UMA	RHk	BBi	D
A1 - A1	-10.0	30.96	12.84	14.41	0.14	61.70	10.96
A2 - A2	0.0	30.92	12.74	8.85	0.15	59.19	10.56
A6 - A6	12.0	31.00	12.64	6.65	0.15	56.27	10.15
A20-A20	54.0	32.03	12.04	8.45	0.17	47.01	8.98
A35-A35	99.0	34.08	10.83	11.01	0.16	38.23	7.57

LOCAL SMALLEST RADIUS OF CURVATURE ON PRESSURE SIDE: 17.5 MM

3.2 ALL OVER EXCEPT OTHERWISE STATED (y = Rz16 Rmax25 = 6.3, x = Rz100 Rmax160 = 12.5, Rz2.5 = 0.4, Rz10 = 1.6)

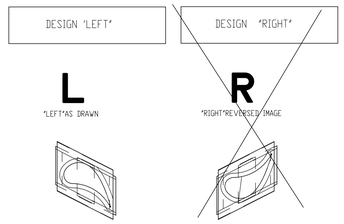

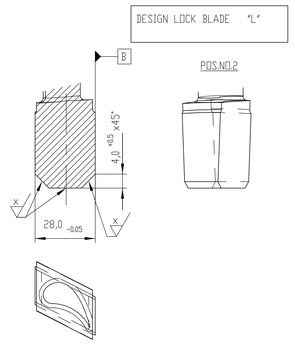

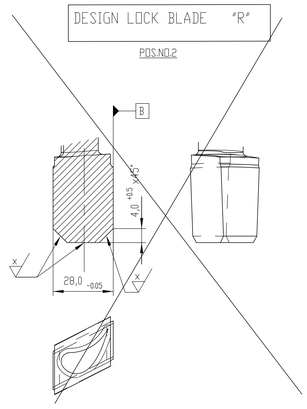

TECHNICAL REQUIREMENTS

TOLERENCES

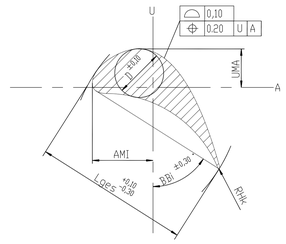

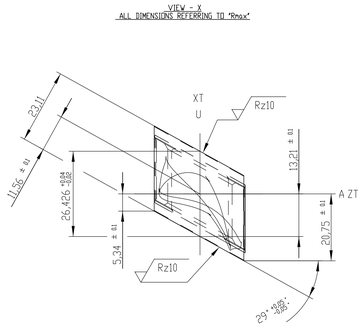

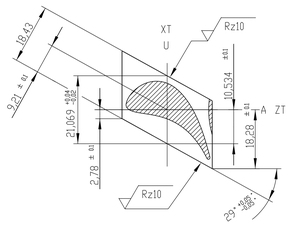

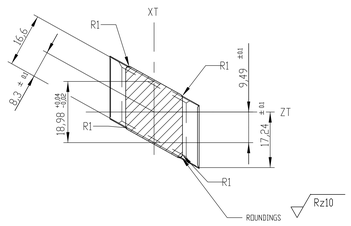

RAW PART IN POSITION OF CENTERING(WITHOUT SCALE

(RELATED TO MINIMAL DIMENSION)

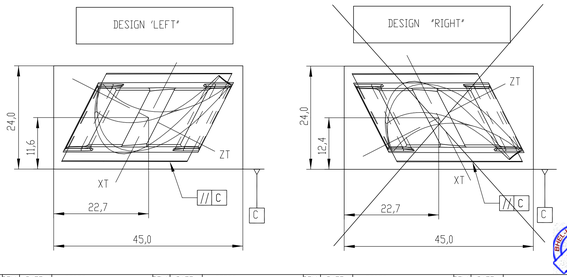

NOTES:

1. STRAK NUMBER: 80051

2. NUMBER OF BLADES/ROW: 143
(INCLUDING LOCK BLADE)

13 (LEFT)	13
ROW NO.	VAR

TYPE OF PRODUCT OR
NAME OF CUSTOMER/PROJECT

BHARAT HEAVY ELECTRICALS LTD
HYDERABAD

	NAME	DATE	NO.OF VAR.
DRN.	HEMASUNDAR	05.03.2015	-NA-
CHD.	K THRIMURTHULU	05.03.2015	
APPD.	T.S.PRABHAKAR	05.03.2015	

DEPT. I.T.D CODE 415 | UNTOL. DIMS. GR. C/M/F | SCALE NTS | WEIGHT (KG) 0,22 | REF. TO ASSY. DRG. -NA- | ITEM NO. -NA- | NO.OF ITEMS -NA-

TITLE MOVING BLADE | CARD CODE - | DRAWING NO. 0-101-02-62010 | REV. 00 | SHT. No 13 | NO. OF SHT. 21

S-999-R28-TR164/110C2S

THE INFORMATION ON THIS DOCUMENT IS THE PROPERTY OF BHARAT HEAVY ELECTRICALS LIMITED. IT MUST NOT BE USED DIRECTLY OR INDIRECTLY IN ANY WAY DETRIMENTAL TO THE INTEREST OF THE COMPAY

GENERAL DIMENSIONAL LIMITS,FITS & TOLERANCES AS PER HY0230261

COMPUTER FILE NAME T-1134 | REF. DRG. NO. | SIGN. AND DATE | INVENTORY NO.

REV.	DATE	ALTERED CHD/APPD	ZONE

Mar Mon 23 14:52 2015

Printed by : P SHASHANK-FM2301 / 6115381 on 13-07-16 13:18:20

This Drawing is printed from Engineering Digital Archive System (EDAS).
Therefore signatures are not essentially required.