FIRST ANGLE PROJECTION

(ALL DIMENSIONS ARE IN mm)

DRG. NO. 0-101-02-62010 SH. 18OF 21

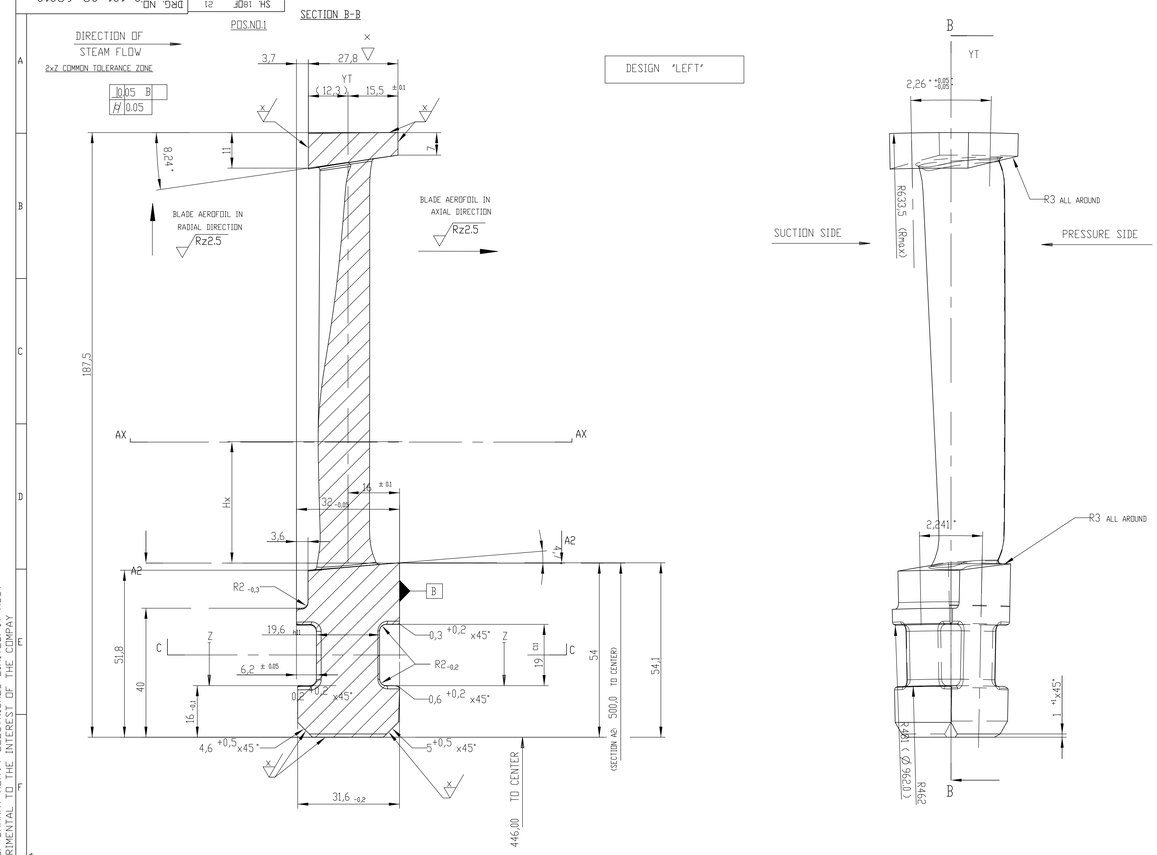

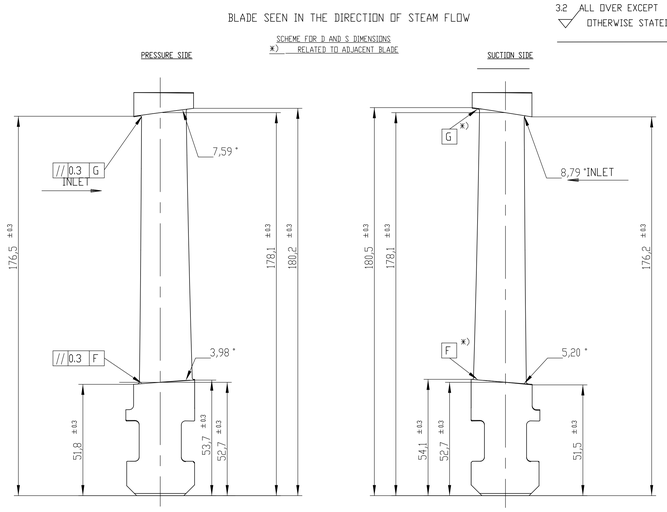

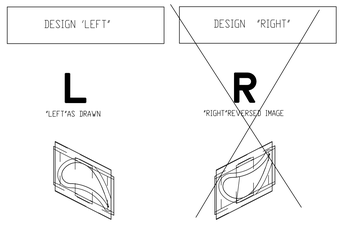

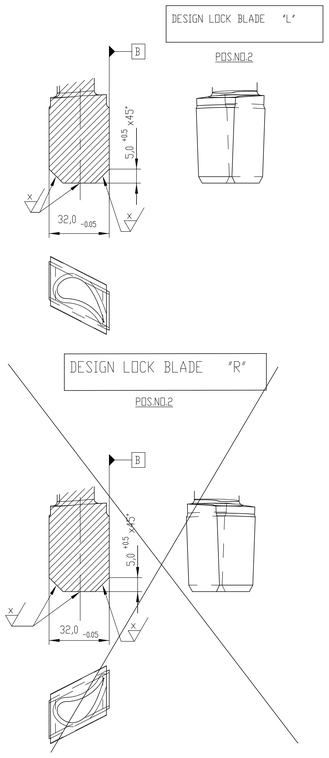

SECTION AX	Hx	Lges	AMI	UMA	RHk	BBi	D
A1 - A1	-10.0	28.37	9.84	11.01	0.15	65.87	9.25
A2 - A2	0.0	28.41	9.69	5.62	0.15	63.50	9.12
A6 - A6	12.0	28.52	9.53	3.81	0.15	60.73	8.98
A23-A23	63.0	29.55	9.06	6.20	0.16	50.33	8.17
A39-A39	111.0	31.27	8.75	8.47	0.16	42.76	6.87

LOCAL SMALLEST RADIUS OF CURVATURE ON PRESSURE SIDE: 18.0 MM

TECHNICAL REQUIREMENTS

TOLERENCES

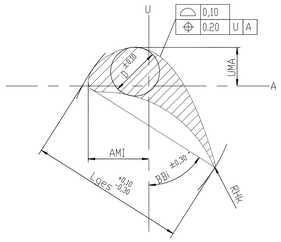

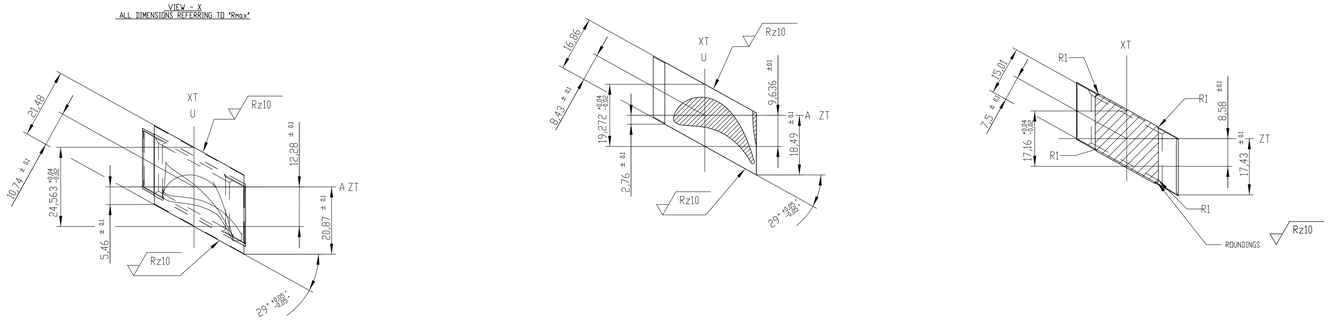

RAW PART IN POSITION OF CENTERING(WITHOUT SCALE

(RELATED TO MINIMAL DIMENSION)

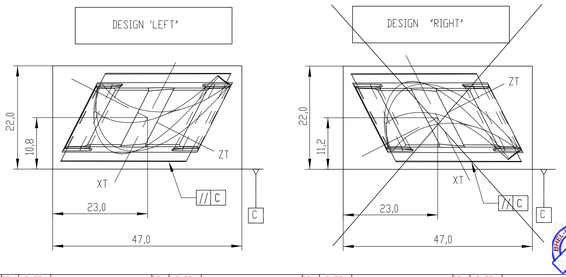

NOTES:

1. STRAK NUMBER: 80056

2. NUMBER OF BLADES/ROW: 164
(INCLUDING LOCK BLADE)

18 (LEFT)	18
ROW NO.	VAR

TYPE OF PRODUCT OR
NAME OF CUSTOMER/PROJECT

BHARAT HEAVY ELECTRICALS LTD
HYDERABAD

	NAME	DATE	NO.OF VAR.
DRN.	HEMASUNDAR	05.03.2015	-NA-
CHD.	K THRIMURTHULU	05.03.2015	
APPD.	T.S.PRABHAKAR	05.03.2015	

DEPT. I.T.D CODE 415 | UNTOL. DIMS. GR. C/M/F | SCALE NTS | WEIGHT (KG) 0,24 | REF. TO ASSY. DRG. -NA- | ITEM NO. -NA- | NO.OF ITEMS -NA-

TITLE MOVING BLADE | CARD CODE - | DRAWING NO. 0-101-02-62010 | REV. 00 | SHT. No 18 | NO. OF SHT. 21

THE INFORMATION ON THIS DOCUMENT IS THE PROPERTY OF BHARAT HEAVY ELECTRICALS LIMITED. IT MUST NOT BE USED DIRECTLY OR INDIRECTLY IN ANY WAY DETRIMENTAL TO THE INTEREST OF THE COMPAY

S-999-R32-TR188/126C2M

GENERAL DIMENSIONAL LIMITS,FITS & TOLERANCES AS PER HY0230261

COMPUTER FILE NAME T-1134

Mar Mon 23 14:54 2015

Printed by : P SHASHANK-FM2301 / 6115381 on 13-07-16 13:18:29

This Drawing is printed from Engineering Digital Archive System (EDAS). Therefore signatures are not essentially required.