FIRST ANGLE PROJECTION (ALL DIMENSIONS ARE IN mm)

DRAWING NO. 02-33-056

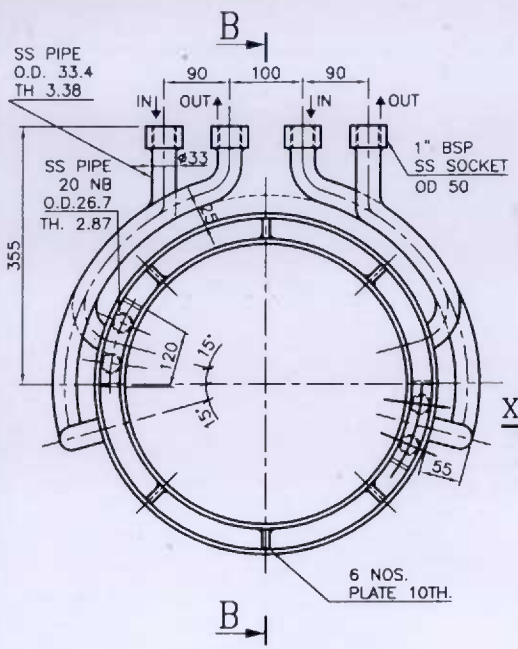

SECTION AA

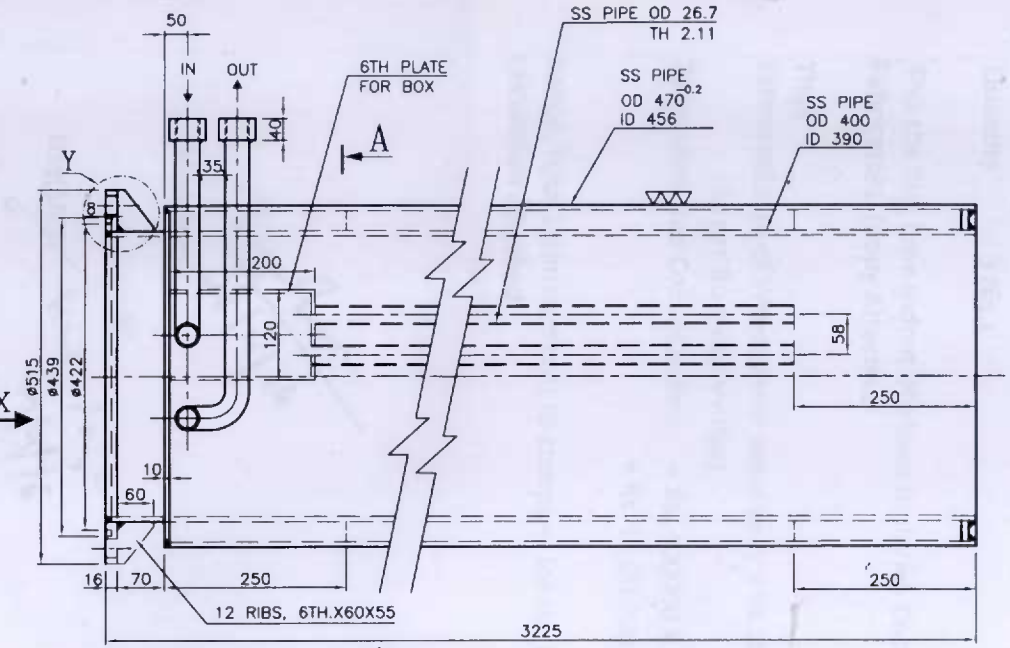

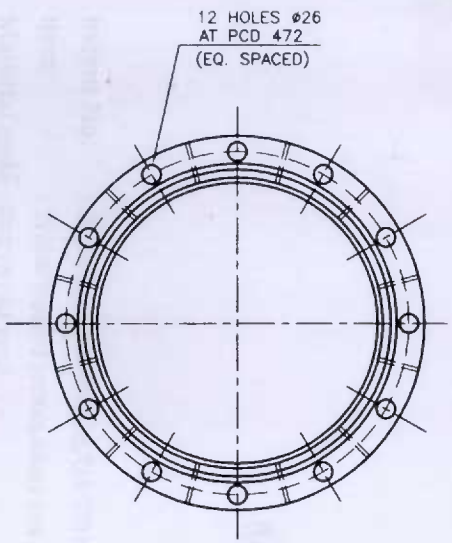

VIEW X

FOR FLANGE

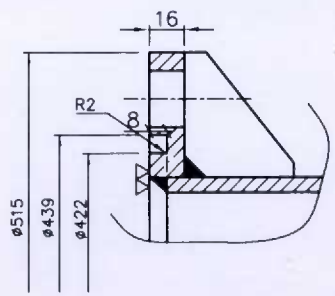

VIEW Y

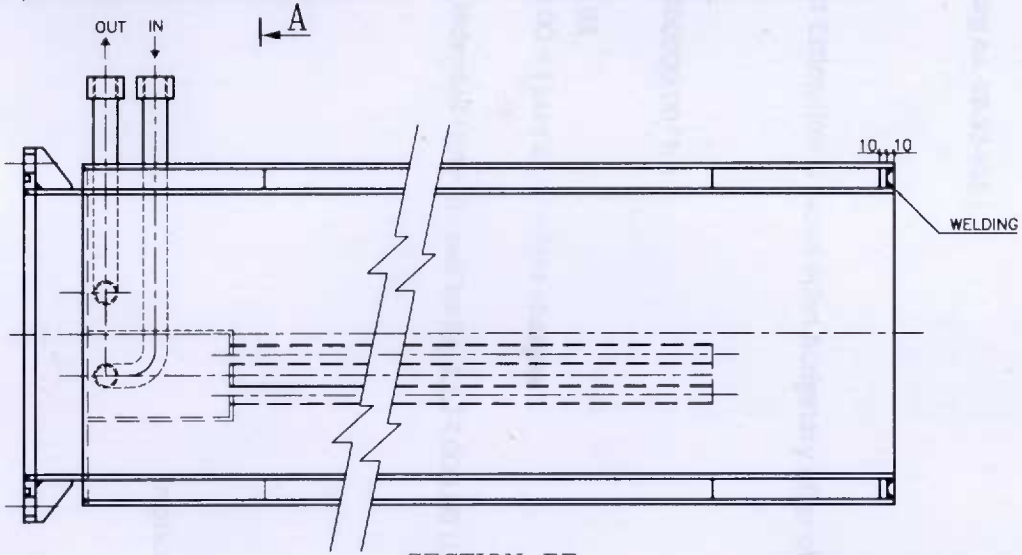

SECTION BB

S.S. PIPE SHOULD BE 304/316

WATER HYDRO TEST FOR 10KG/CM^2

MATERIAL– S.S. NON MAGNETIC.

	NAME	SIGN	DATE
DRN	PRAVEEN		23.06.15
CHD	ANAMIKA		23.06.15
APPD			

NO. OF VAR –

BHARAT HEAVY ELECTRICALS LTD.
RANIPUR, HARDWAR

DEPT

CODE

SCALE NTS

WEIGHT (KG) –

REF. TO ASSY. DRG. –

ITEM No. –

NO. OF ITEMS –

TITLE : WATER COOLED ELECTRODE JACKET ASSY FOR 70T. VAD (SMS)

CARD CODE

DRAWING NO. 02-33-056 R1

SHEET No. 01 No. OF SHEETS 01

SIZE A2

REV	DATE	ALTERED / CHECKED	REV	DATE	ALTERED / CHECKED	REV	DATE	ALTERED / CHECKED	REV	DATE	ALTERED / CHECKED	REV	DATE	ALTERED / CHECKED	REV	DATE	ALTERED / CHECKED
															01	15.9.11	

Sign & Date

Inventory No.

12436-904131 Ref.Drawing No.

COPYRIGHT AND CONFIDENTIAL

THE INFORMATION ON THIS DOCUMENT IS THE PROPERTY OF BHARAT HEAVY ELECTRICALS LIMITED. IT MUST NOT BE USED DIRECTLY OR INDIRECTLY IN ANY WAY DETRIMENTAL TO THE INTEREST OF THE COMPANY.