DRG. NO. RD DG 4 35 0617 0619B

FIRST ANGLE PROJECTION

(ALL DIMENSIONS ARE IN mm)

(~1.6)

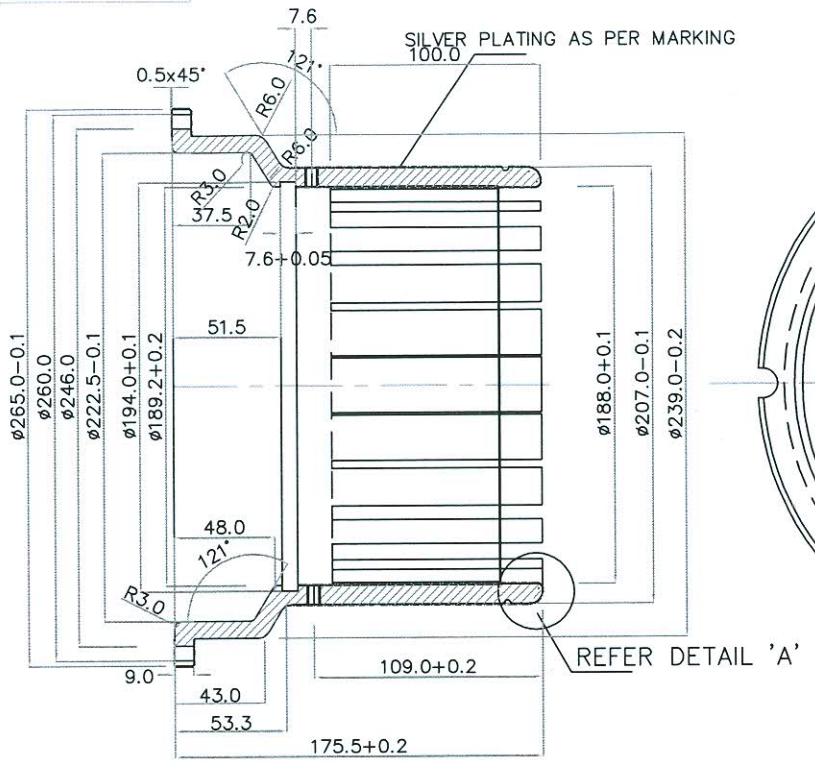

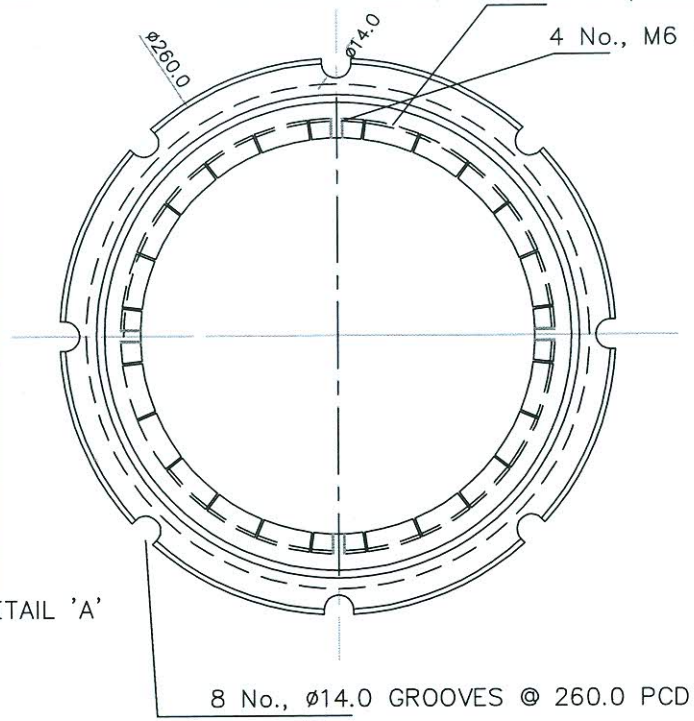

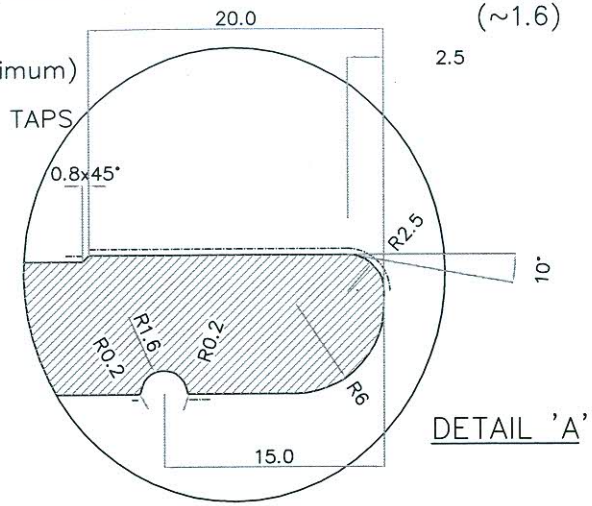

NOTE:

ALL SHARP CORNERS MACHINED TO 0.4X45°.

COMPONENT TO BE SILVER PLATED TO 10–12 MICRON.

VAR.00	REMARKS	VAR NO.	ITEM NO.	DESCRIPTION	STD	DRAWING NO.	IT.NO. / VAR	MATL. CODE / MATL. SPECN.	A C	UNIT	UNIT WT. / QTY.	CS	ZONE
			01	Tube		ø320.0x180.0		Cu+Cr			01		

TYPE OF PRODUCT

NAME OF CUSTOMER

BHARAT HEAVY ELECTRICALS LTD. HYDERABAD

	NAME	SIGN.	DATE	NO. OF VAR.
DRN	KSRAO		26.12.05	
CKD	MMRAO		02.01.06	
APPD	HSJAIN		02.01.06	

DEPT. CODE	GRADE OF TOL. DIM. C/M/F	SCALE	WEIGHT(KG)	REF. TO	ITEM NO.	NO. OF ITEMS
		NTS	6.8 KG	RD DG 4 35 0617 0619	1	

TITLE: CC CONTACT

CARD CODE

DRAWING NO. RD DG 4 35 0617 0619B REV.

SHEET NO. NO. OF SHEETS

REV.	DATE	ALTERED / CHECKED	REV.	DATE	ALTERED / CHECKED
ZONE			ZONE		

REF. DRG. NO. | SIGN. AND DATE | INVENTORY NO.

THE INFORMATION ON THIS DOCUMENT IS THE PROPERTY OF BHARAT HEAVY ELECTRICALS LIMITED.
IT MUST NOT BE USED DIRECTLY OR INDIRECTLY IN ANY WAY DETRIMENTAL TO THE INTEREST OF THE COMPANY.