RD DG 4 35 1133 6130
DRG. NO.

FIRST ANGLE PROJECTION

(ALL DIMENSIONS ARE IN mm)

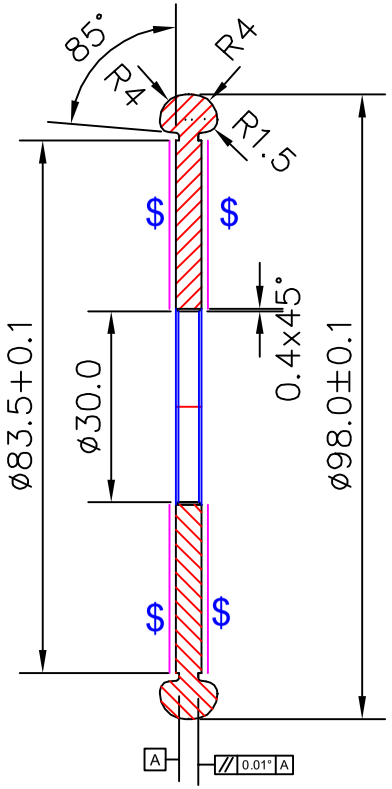

SECTION A-A'

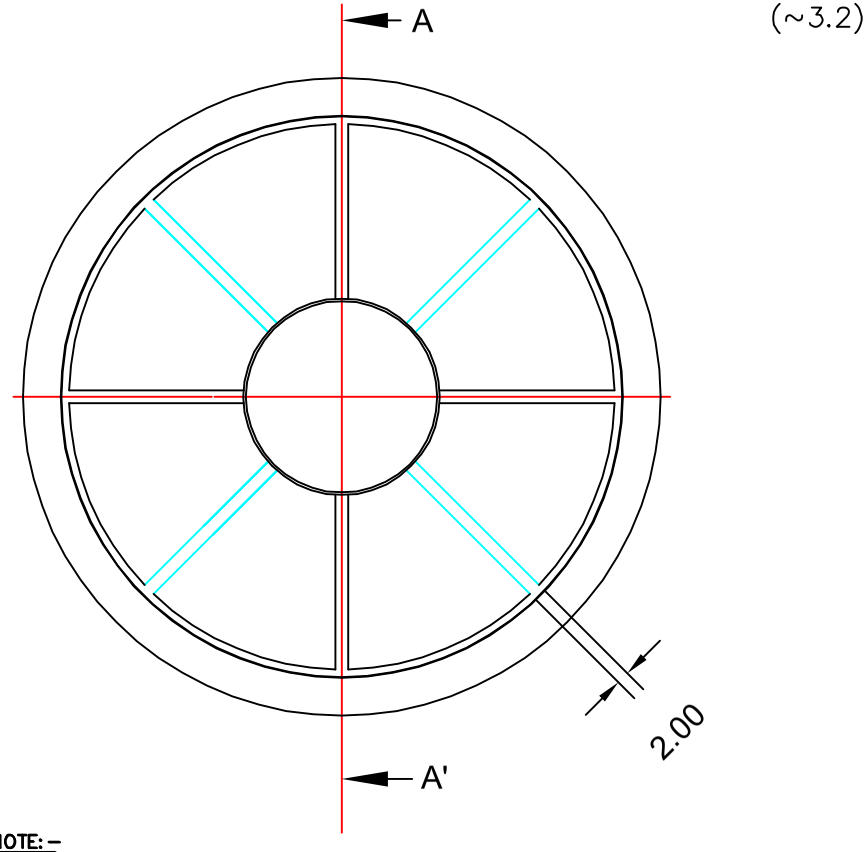

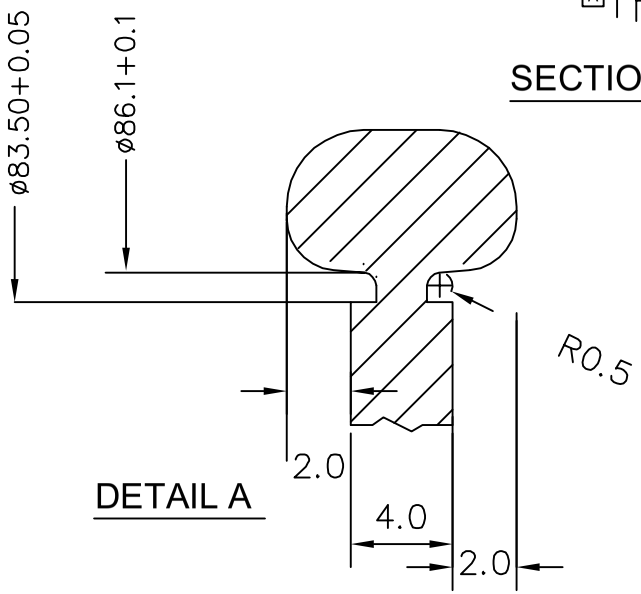

DETAIL A

NOTE:-

1. TOTAL 8 GROOVES DEPTH OF 0.8MM, 4 ON EITHER SIDE AT 45° DIFFERENCE IN POSITION.

2. SILVER PLATING SHALL BE DONE ON '$' MARK FACES.

VAR.00	REMARKS	VAR NO.	ITEM NO.	DESCRIPTION	STD	DRAWING NO.	IT.NO. / VAR	MATL. CODE / MATL. SPECN.	A C	UNIT	UNIT WT. / QTY.	GS
			01	CONTACT PLATE		ø100.0 X 8.0		HE-30 / AL ALLOY			100	

TYPE OF PRODUCT: CGSM-145

NAME OF CUSTOMER

BHARAT HEAVY ELECTRICALS LTD.
HYDERABAD

	NAME	SIGN.	DATE	NO.OF VAR.
DRN	KS RAO		09.07.12	
CKD	AL		09.07.12	
APPD	MM RAO		09.07.12	1

REV.	DATE	ALTERED / CHECKED	REV.	DATE	ALTERED / CHECKED
ZONE			ZONE		

DEPT. GSG
CODE 35
GRADE OF TOL. DIM. C/M/F
SCALE NTS
WEIGHT(KG)
REF. TO RD DG 4 35 1133 6100
ITEM NO. 2
NO.OF ITEMS 6
TITLE CONTACT PLATE
CARD CODE
DRAWING NO. RD DG 4 35 1133 6130
REV. 01
SHEET NO.
NO. OF SHEETS

THE INFORMATION ON THIS DOCUMENT IS THE PROPERTY OF BHARAT HEAVY ELECTRICALS LIMITED.
IT MUST NOT BE USED DIRECTLY OR INDIRECTLY IN ANY WAY DETRIMENTAL TO THE INTEREST OF THE COMPANY.

REF. DRG. NO.
SIGN. AND DATE
INVENTORY NO.