DRG. NO. RD DG 4 35 0618 0100

FIRST ANGLE PROJECTION

(ALL DIMENSIONS ARE IN mm)

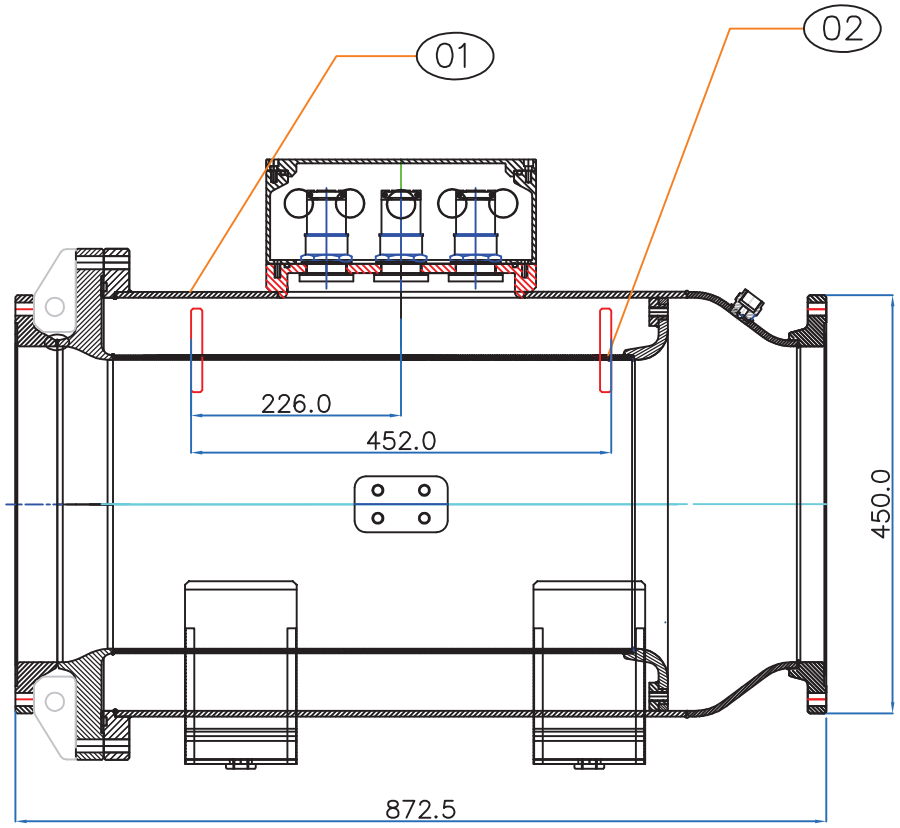

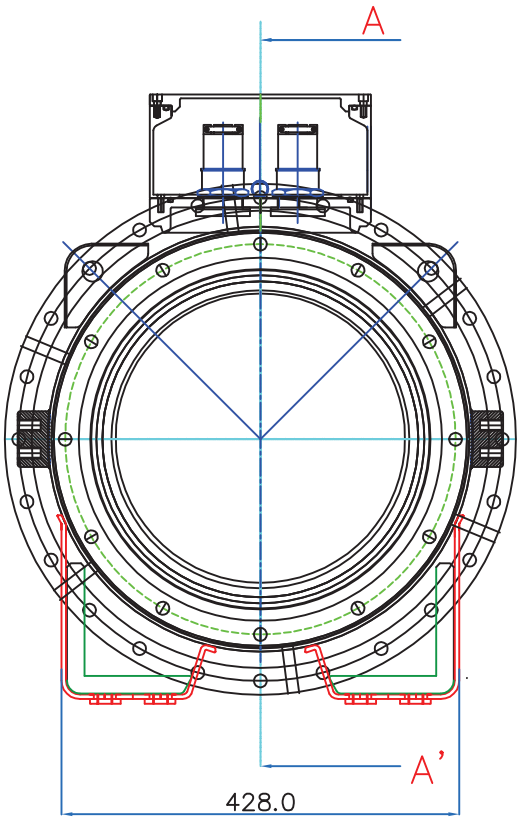

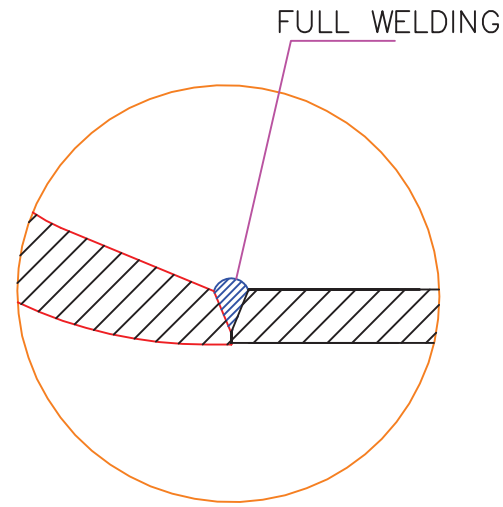

DETAIL 'A'

NOTE:

1. PIPE AND FLANGE TO BE MIG WELDING WITH SUITABLE SS ELECTRODE
2. THE ROOT SHOULD BE HOMOGENEOUS AND CONTINUOUS.
3. PRESSURE TEST AS PER ENCLOSED SPECIFICATION.
4. TESTED ASSEMBLIES TO BE DEGREASED, SAND BLASTED AND POWDER COATED ON OUTSIDE.
5. ELECTRO POLISH INSIDE SURFACE.

VAR.CO	REMARKS	VAR NO.	ITEM NO.	DESCRIPTION	STD	DRAWING NO.	IT.NO. / VAR	MATL. CODE / MATL. SPECN.	A C	UNIT	UNIT WT. / QTY.
			02	CORE SUPPORT		RD DG 4 35 0569 0120		SS-304 L			01
			01	CT HOUSING		RD DG 4 35 0569 0110		SS-304 L			01

TYPE OF PRODUCT
NAME OF CUSTOMER
GSM-245

BHARAT HEAVY ELECTRICALS LTD.
HYDERABAD

	NAME	SIGN.	DATE
DRN	MINTOO		23.10.14
CKD	MMRAO		23.10.14
APPD	MMRAO		23.10.14

REV.	DATE	ALTERED / CHECKED	REV.	DATE	ALTERED / CHECKED
ZONE			ZONE		

DEPT. / CODE | GRADE OF TOL. DIM. C/M/F | SCALE NTS | WEIGHT(KG) 354.2 KG | REF. TO RD DG 4 35 0618 0000 | ITEM NO. 1

TITLE: CT ASSEMBLY | CARD CODE | DRAWING NO. RD DG 4 35 0618 0100 | SHEET NO. | NO. OF SHEETS