RD DG 4 35 0517 2012

FIRST ANGLE PROJECTION

(ALL DIMENSIONS ARE IN mm)

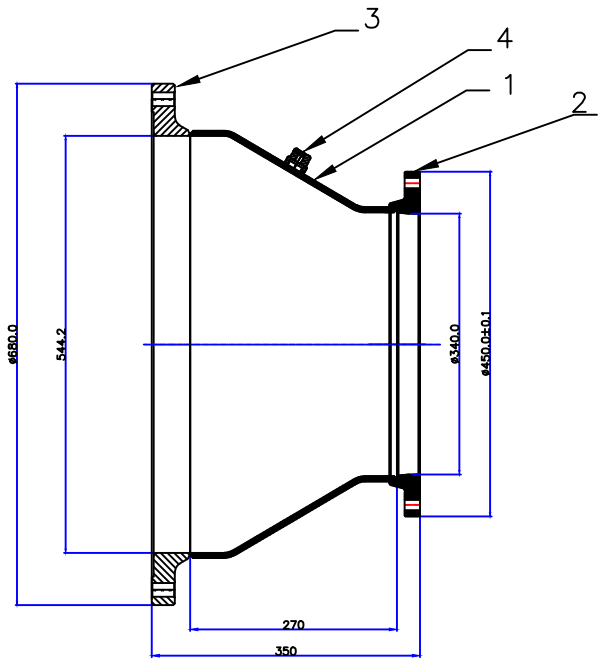

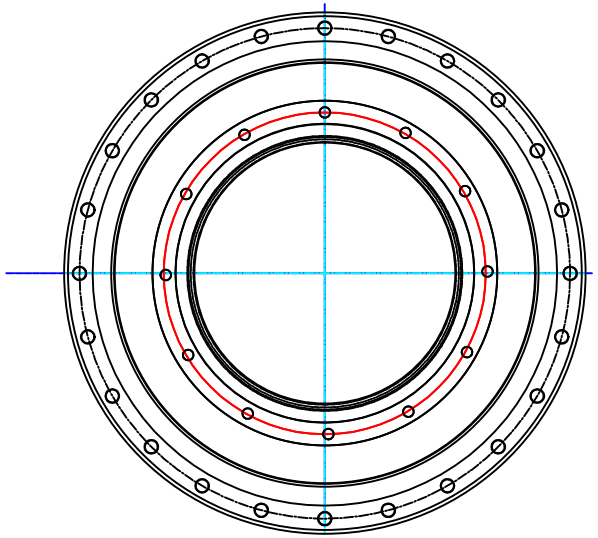

ITEM NO.	DESCRIPTION	STD	DRAWING NO.	IT.NO. / VAR	MATL. CODE / MATL. SPECN.	A C	UNIT	UNIT WT. / QTY.	GS	ZONE
03	GAS STUD		RD DG 4 35 1133 416A		SS-304 L			01		
03	FLANGE		RD DG 4 35 0617 113B		SS-304 L			01		
02	FLANGE-IIA		RD DG 4 35 0517 2012A		SS-304 L			01		
01	REDUCER PIPE		RD DG 4 35 0517 2081		SS-304 L			01		

VAR.00	REMARKS	VAR NO.	ITEM NO.	DESCRIPTION	STD	DRAWING NO.	IT.NO. / VAR	MATL. CODE / MATL. SPECN.	A C	UNIT	UNIT WT. / QTY.	GS	ZONE
			01	BLOCK		ø680.0x500.0		SS-304L			2		

NOTE:

1. PIPE AND FLANGE TO BE TIG/MIG WELDING WITH SUITABLE SS ELECTRODE
2. THE WELDING ROOT SHOULD BE HOMOGENEOUS AND CONTINUOUS.
3. PRESSURE TEST AS PER SPECIFICATION
4. TESTED ASSEMBLIES TO BE DEGREASED, SAND BLASTED AND POWDER COATED ON OUTSIDE.
5. MAINTAIN PERPENDICULARITY AND PARALLARITY BETWEEN FLANGES WITHIN 0.1°
6. INNER SURFACE OF REDUCER PIPE SHALL BE ELECTROPOLISHED.

THE INFORMATION ON THIS DOCUMENT IS THE PROPERTY OF BHARAT HEAVY ELECTRICALS LIMITED.
IT MUST NOT BE USED DIRECTLY OR INDIRECTLY IN ANY WAY DETRIMENTAL TO THE INTEREST OF THE COMPANY.

INVENTORY NO. | SIGN. AND DATE | REF. DRG. NO.

REV.	DATE	ALTERED / CHECKED	REV.	DATE	ALTERED / CHECKED
ZONE			ZONE		

TYPE OF PRODUCT / NAME OF CUSTOMER: GSM-245

BHARAT HEAVY ELECTRICALS LTD. HYDERABAD

	NAME	SIGN.	DATE	NO.OF VAR.
DRN	NSK		06.06.13	01
CKD	NSK		06.06.13	
APPD	MMRAO		06.06.13	

DEPT. / CODE	GRADE OF TOL. DIM. C/M/F	SCALE	WEIGHT(KG)	REF. TO	ITEM NO.	NO.OF ITEMS
		NTS				

TITLE: REDUCER ASSBLY

CARD CODE

DRAWING NO.: RD DG 4 35 0517 2080 — REV. 00

SHEET NO. | NO. OF SHEETS