DRG. NO. RD DG 4 35 0618 0110

FIRST ANGLE PROJECTION

(ALL DIMENSIONS ARE IN mm)

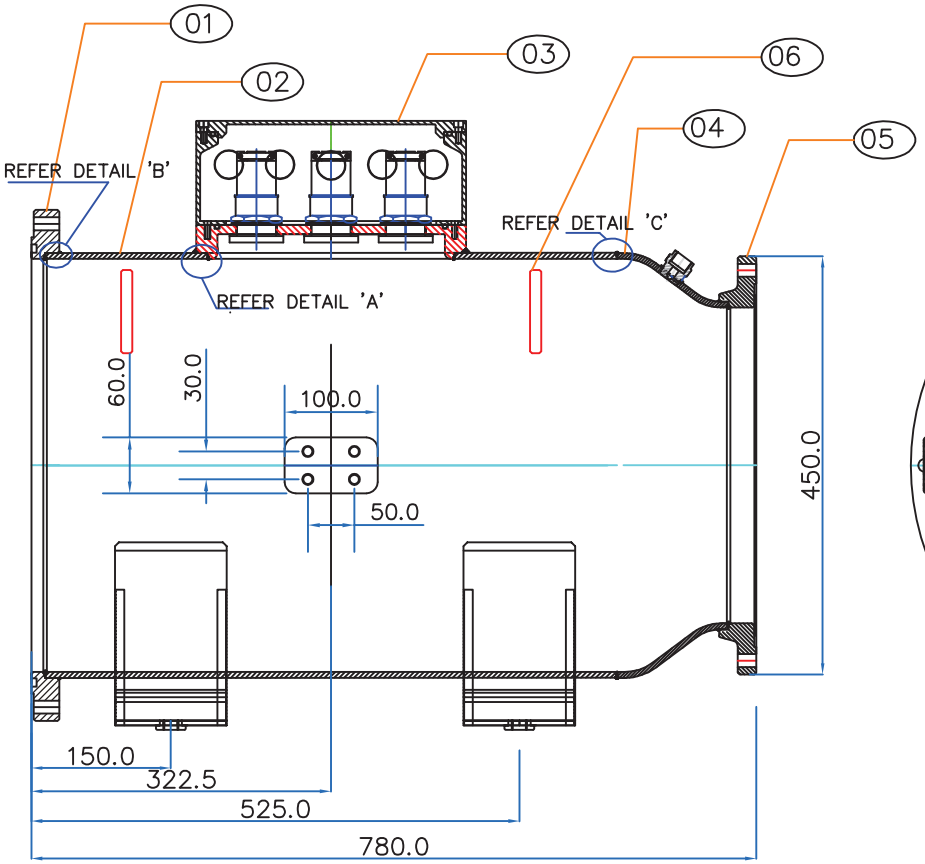

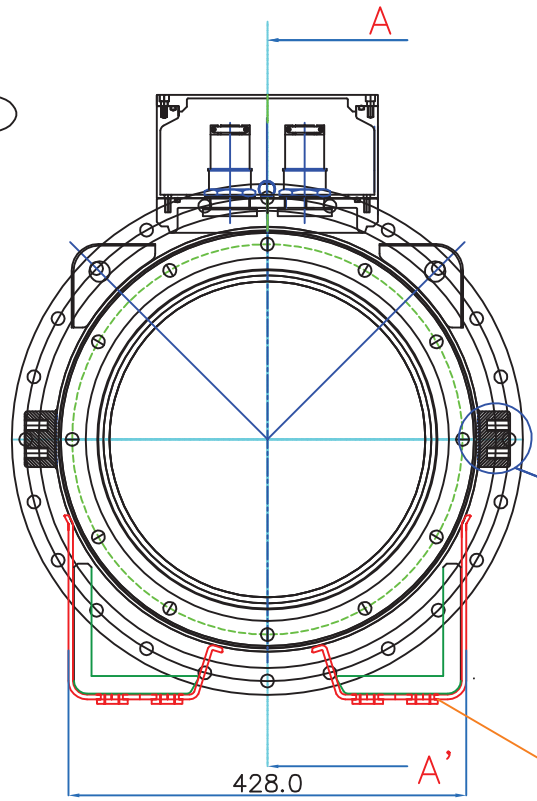

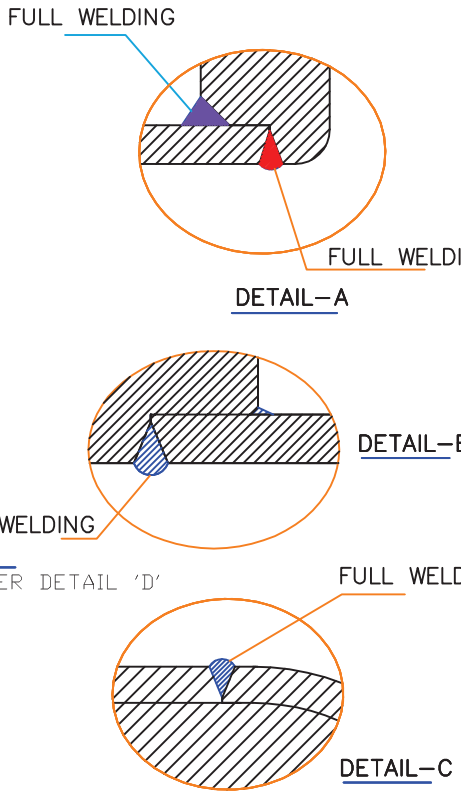

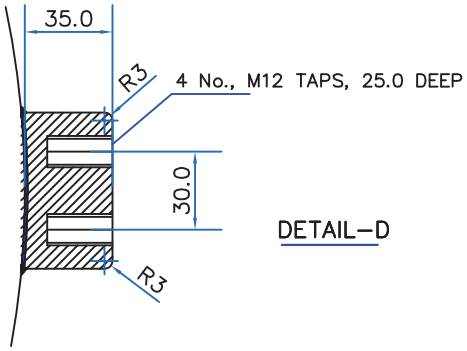

07	SUPPORT BRACKET ASSY.	RD DG 4 35 0569 0117		SS–304 L			01
06	LIFTING BRACKET	RD DG 4 35 0569 0116		SS–304 L			01
05	FLANGE II	RD DG 4 35 0569 0115		SS–304 L			01
04	REDUCER PIPE	RD DG 4 35 0569 0114		SS–304 L			01
03	TERMINAL BOX ASSY.	RD DG 4 35 0569 0113		SS–304 L / HE–30			01
02	PIPE	RD DG 4 35 0569 0112		SS–304 L			01
01	FLANGE I	RD DG 4 35 0569 0111		SS–304 L			01

NOTE:

1. PIPE AND FLANGE TO BE MIG WELDING WITH SUITABLE SS ELECTRODE
2. THE ROOT SHOULD BE HOMOGENEOUS AND CONTINUOUS.

REV.	DATE	ALTERED	REV.	DATE	ALTERED
		CHECKED			CHECKED
ZONE			ZONE		

TYPE OF PRODUCT: GSM–245

NAME OF CUSTOMER

BHARAT HEAVY ELECTRICALS LTD.
HYDERABAD

	NAME	SIGN.	DATE
DRN	MINTOO		23.10.14
CKD	MMRAO		23.10.14
APPD	MMRAO		23.10.14

DEPT. CODE	GRADE OF TOL. DIM. C/M/F	SCALE	WEIGHT(KG)	REF. TO	ITEM NO.
		NTS	354.2 KG	RD DG 4 35 0618 0100	1

TITLE: CT HOUSING

CARD CODE

DRAWING NO. RD DG 4 35 0618 0110

SHEET NO. | NO. OF SHEETS